SECTION 00 01 01

STATE OF DELAWARE
OFFICE OF MANAGEMENT AND BUDGET
DIVISION OF FACILITIES MANAGEMENT
CONTRACT #MC3512000045A

SPECIFICATIONS
FOR

NORTHEAST STATE SERVICE CENTER REIMAGINING PROJECT

1624 JESSUP STREET
WILMINGTON, DELAWARE 19802

PREPARED
BY

DAVIS, BOWEN & FRIEDEL, INC.
1 PARK AVENUE
MILFORD, DE 19963

DEDC, LLC
315 S. CHAPEL STREET
NEWARK, DE 19711

JULY 2026

DBF #0586B042.N01

SECTION 00 01 10

TABLE OF CONTENTS

A. Specifications for this project are arranged in accordance with the Construction Specification Institute numbering system and format. Section numbering is discontinuous and all numbers not appearing in the Table of Contents are not used for this Project.

B. DOCUMENTS BOUND HEREWITH

DIVISION 00 **PROCUREMENT AND CONTRACT REQUIREMENTS**

Section

……..INTRODUCTORY INFORMATION
00 01 01 Project Title Page
00 01 10 Table of Contents
00 01 15 List of Drawing Sheets
……..PROCUREMENT REQUIREMENTS
00 11 13 Advertisement for Bids
00 21 13 Instructions to Bidders
00 41 13 Bid Form
--- Bid Form – Affidavit of Contractor Qualifications
--- Bid Form – Non-Collusion Statement
--- Bid Form – Affidavit of Employee Drug Testing Program
00 43 13 Bid Bond
……..CONTRACTING REQUIREMENTS
00 52 13 Standard Form of Agreement Between Owner and Contractor (Sample AIA A101-2017)
- Document A101 – 2017 Exhibit A, Insurance and Bonds (Sample)
00 54 13 Supplement to Agreement Between Owner and Contractor (AIA A101-2017)
- Supplement to A101-2017 – Exhibit A, Insurance and Bonds
00 61 13.13 Performance Bond
00 61 13.16 Payment Bond
00 62 76 Application and Certificate for Payment Forms (Sample AIA G702 & G703)
00 63 73 Allowance Access Authorization Form
00 72 13 General Conditions of the Contract for Construction (Sample AIA A201-2017)
00 73 13 Supplementary General Conditions
00 73 43 Wage Rate Requirements
00 73 46 Wage Determination Schedule
00 81 13 General Requirements
00 81 14 Employee Drug Testing Forms (Sample Drug Testing Forms)
00 81 15 Affidavit of Craft Training Compliance

DIVISION 01 **GENERAL REQUIREMENTS**

Section

01 11 00 Summary of the Work
01 21 00 Allowances
01 23 00 Alternates
01 31 19 Project Meetings
01 33 23 Shop Drawings, Product Data and Samples
01 50 00 Temporary Facilities and Controls
01 66 00 Product Storage and Handling Requirements
01 74 19 Construction Waste Management and Disposal

01 77 00 Closeout Procedures

DIVISION 02 **EXISTING CONDITIONS**
Section
02 41 00 Demolition

DIVISION 03 **CONCRETE**
Section
03 30 00 Cast-in-Place Concrete

DIVISION 05 **METALS**
Section
05 40 00 Cold-Formed Metal Framing
05 51 13 Metal Pan Stairs
05 52 10 Handrails and Railings

DIVISION 06 **WOOD, PLASTICS, AND COMPOSITES**
Section
06 10 00 Rough Carpentry

DIVISION 07 **THERMAL AND MOISTURE PROTECTION**
Section
07 62 00 Sheet Metal Flashing and Trim
07 84 00 Firestopping
07 92 00 Joint Sealants

DIVISION 08 **DOORS AND FRAMES**
Section
08 11 13 Hollow Metal Doors and Frames
08 14 16 Flush Wood Doors
08 41 13 Aluminum-Framed Entrances and Storefronts
08 71 00 Door Hardware
08 71 13 Automatic Door Operators
08 80 00 Glazing

DIVISION 09 **FINISHES**
Section
09 21 16 Gypsum Board Assemblies
09 30 00 Tiling
09 51 00 Acoustical Ceilings
09 65 19 Resilient Tile Flooring
09 68 13 Tile Carpeting
09 91 23 Interior Painting
09 96 00 High Performance Coatings

DIVISION 10 **SPECIALTIES**
Section
10 14 00 Signage

DIVISION 12 **FURNISHINGS**
Section
12 36 00 Countertops

DIVISION 23 **HEATING, VENTILATING, AND AIR CONDITIONING (HVAC)**

Section

23 05 93 Testing, Adjusting, and Balancing for HVAC
23 07 13 Duct Insulation
23 31 00 HVAC Ducts and Casings
23 37 00 Air Outlets and Inlets

DIVISION 26 **ELECTRICAL**

Section

26 05 05 Selective Demolition for Electrical
26 05 19 Low Voltage Electrical Power Conductors and Cable
26 05 26 Grounding and Bonding for Electrical Systems
26 05 29 Hangers and Supports
26 05 33.13 Conduit for Electrical Systems
26 05 33.16 Boxes for Electrical Systems
26 05 53 Identification for Electrical Systems
26 05 83 Wiring Connections
26 09 23 Lighting Control Devices
26 27 26 Wiring Devices
26 28 16.13 Enclosed Circuit Breakers
25 51 00 Interior Lighting
25 56 00 Exterior Lighting

DIVISION 27 **COMMUNICATION**

Section

27 10 00 Structured Cabling for Voice and Data (DTI)

DIVISION 28 **ELECTRONIC SAFETY AND SECURITY**

Section

28 46 00 Fire Detection and Alarm

END OF TABLE OF CONTENTS

This page intentionally left blank.

SECTION 00 01 15

LIST OF DRAWING SHEETS

G-001	TITLE SHEET
G-002	ARCHITECTURAL SYMBOLS, ABBREVIATIONS, LEGEND
G-003	KEY PLAN
G-004	TEMPORARY RECEPTION FLOOR PLANS – DEMOLITION, PHASE 1 AND PHASE 2
G-005	LIFE SAFETY PLAN & CODE DATA

DEMOLITION PLANS

AD101	FLOOR PLAN - DEMOLITION PLAN
AD102	REFLECTED CEILING PLAN - DEMOLITION

ARCHITECTURAL DRAWINGS

A-101	FLOOR PLAN - NEW WORK
A-102	REFLECTED CEILING PLAN - NEW WORK
A-110	FINISH PLAN & SPECS
A-201	EXTERIOR ELEVATIONS AND DETAILS
A-401	ENLARGED FLOOR PLAN, SECTIONS, & ELEVATIONS
A-402	ENLARGED FLOOR PLAN, SECTIONS, & ELEVATIONS
A-403	ENLARGED FLOOR PLAN, SECTIONS, & DETAILS
A-601	DOOR SCHEDULE, DOOR, FRAME, AND WINDOW TYPES

MECHANICAL DRAWINGS

M-000	MECHANICAL – LEGEND, ABBREVIATIONS, & NOTES
MD-101	MECHANICAL – FIRST FLOOR DEMOLITION PLAN
M-101	MECHANICAL – FIRST FLOOR NEW WORK PLAN

ELECTRICAL DRAWINGS

E-000	ELECTRICAL - LEGEND, ABBREVIATIONS, & NOTES
E-001	ELECTRICAL – LUMINAIRE SCHEDULE
ED-101	ELECTRICAL - FIRST FLOOR POWER & LOWER LEVEL PLANS - DEMOLITION
ED-201	ELECTRICAL - FIRST FLOOR LIGHTING & LOWER LEVEL PLANS – DEMOLITION
E-101	ELECTRICAL - FIRST FLOOR POWER & LOWER LEVEL PLANS – NEW WORK
E-201	ELECTRICAL - FIRST FLOOR LIGHTING & LOWER LEVEL PLANS – NEW WORK
E-300	ELECTRICAL – PANELBOARD SCHEDULES AND DETAILS

END OF SECTION

This page intentionally left blank.

SECTION 00 11 16

INVITATION TO BID

Sealed bids for **OMB/DFM Contract No. MC3512000045A – Northeast State Service Center Reimagining Project** will be received by the State of Delaware, Office of Management and Budget, Division of Facilities Management, by way of the Bonfire Portal at https://DFM.bonfirehub.com until **1:30 PM local time on August 25, 2026**. Bidder bears the risk of late submission.

Bids will be opened and read aloud at **2:30 PM** local time on **August 25, 2026,** at the Haslet Armory, 122 Martin Luther King Blvd. S., Dover, DE 19901.

The project involves approximately 3,000 sq. ft. of interior renovation, reconstruction of a vestibule, addition of an exterior stair, and all associate mechanical, electrical, and fire protection work.

A **MANDATORY** Pre-Bid Meeting will be held on **August 5, 2026 at 9:00 AM local time at the Northeast State Service Center, 1624 Jessup St., Wilmington, DE 19802**, for the purpose of establishing the list of subcontractors and to answer questions. Upon arrival, attendees are to check in at front desk for directions to pre-bid meeting room. Representatives of each party to any Joint Venture must attend this meeting. **ATTENDANCE OF THIS MEETING IS A PREREQUISITE FOR BIDDING ON THIS CONTRACT.**

Contract documents may be obtained at the office of Davis, Bowen & Friedel, Inc., upon receipt of $25.00 per electronic set/non-refundable. Checks are to be made payable to "Davis, Bowen & Friedel, Inc."

Bidders will not be subject to discrimination on the basis of race, creed, color, sex, sexual orientation, gender identity or national origin in consideration of this award, and Minority Business Enterprises, Disadvantaged Business Enterprises, Women-Owned Business Enterprises and Veteran-Owned Business Enterprises will be afforded full opportunity to submit bids on this contract. Each bid must be accompanied by a bid security equivalent to ten percent of the bid amount and all additive alternates. The successful bidder must post a performance bond and payment bond in a sum equal to 100 percent of the contract price upon execution of the contract. The Owner reserves the right to reject any or all bids and to waive any informalities therein. The Owner may extend the time and place for the opening of the bids from that described in the advertisement, with not less than two calendar days' notice by certified delivery, facsimile machine or other electronic means to those bidders' receiving plans.

END OF SECTION

This page intentionally left blank.

SECTION 00 21 13

INSTRUCTIONS TO BIDDERS

TABLE OF ARTICLES

1. GENERAL

2. BIDDER'S REPRESENTATION

3. BIDDING DOCUMENTS

4. BIDDING PROCEDURES

5. CONSIDERATION OF BIDS

6. POST-BID INFORMATION

7. PERFORMANCE BOND AND PAYMENT BOND

8. FORM OF AGREEMENT BETWEEN OWNER AND CONTRACTOR

ARTICLE 1: GENERAL

1.1 DEFINITIONS

1.1.1 Whenever the following terms are used, their intent and meaning shall be interpreted as follows:

1.2 STATE: The State of Delaware.

1.3 AGENCY: Contracting State Agency as noted on cover sheet.

1.4 DESIGNATED OFFICIAL: The agent authorized to act for the Agency.

1.5 BIDDING DOCUMENTS: Bidding Documents include the Bidding Requirements and the proposed Contract Documents. The Bidding Requirements consist of the Advertisement for Bid, Invitation to Bid, Instructions to Bidders, Supplementary Instructions to Bidders (if any), General Conditions, Supplementary General Conditions, General Requirements, Special Provisions (if any), the Bid Form (including the Non-collusion Statement), and other sample bidding and contract forms. The proposed Contract Documents consist of the form of Agreement between the Owner and Contractor, as well as the Drawings, Specifications (Project Manual) and all Addenda issued prior to execution of the Contract.

1.6 CONTRACT DOCUMENTS: The Contract Documents consist of the, Instructions to Bidders, Supplementary Instructions to Bidders (if any), General Conditions, Supplementary General Conditions, General Requirements, Special Provisions (if any), the form of agreement between the Owner and the Contractor, Drawings (if any), Specifications (Project Manual), and all addenda.

1.7 AGREEMENT: The form of the Agreement shall be AIA Document A101, Standard Form of Agreement between Owner and Contractor where the basis of payment is a STIPULATED SUM. In the case of conflict between the instructions contained therein and the General Requirements herein, these General Requirements shall prevail.

1.8 GENERAL REQUIREMENTS (or CONDITIONS): General Requirements (or conditions) are instructions pertaining to the Bidding Documents and to contracts in general. They contain, in summary, requirements of laws of the State; policies of the Agency and instructions to bidders.

1.9 SPECIAL PROVISIONS: Special Provisions are specific conditions or requirements peculiar to the bidding documents and to the contract under consideration and are supplemental to the General Requirements. Should the Special Provisions conflict with the General Requirements, the Special Provisions shall prevail.

1.10 ADDENDA: Written or graphic instruments issued by the Owner/Architect prior to the execution of the contract which modify or interpret the Bidding Documents by additions, deletions, clarifications or corrections.

1.11 BIDDER OR VENDOR: A person or entity who formally submits a Bid for the material or Work contemplated, acting directly or through a duly authorized representative who meets the requirements set forth in the Bidding Documents.

1.12 SUB-BIDDER: A person or entity who submits a Bid to a Bidder for materials or labor, or both for a portion of the Work.

1.13 BID: A complete and properly executed proposal to do the Work for the sums stipulated therein, submitted in accordance with the Bidding Documents.

1.14 BASE BID: The sum stated in the Bid for which the Bidder offers to perform the Work described in the Bidding Documents as the base, to which Work may be added or from which Work may be deleted for sums stated in Alternate Bids (if any are required to be stated in the bid).

1.15 ALTERNATE BID (or ALTERNATE): An amount stated in the Bid, where applicable, to be added to or deducted from the amount of the Base Bid if the corresponding change in the Work, as described in the Bidding Documents is accepted.

1.16 UNIT PRICE: An amount stated in the Bid, where applicable, as a price per unit of measurement for materials, equipment or services or a portion of the Work as described in the Bidding Documents.

1.17 SURETY: The corporate body which is bound with and for the Contract, or which is liable, and which engages to be responsible for the Contractor's payments of all debts pertaining to and for his acceptable performance of the Work for which he has contracted.

1.18 BIDDER'S DEPOSIT: The security designated in the Bid to be furnished by the Bidder as a guaranty of good faith to enter into a contract with the Agency if the Work to be performed or the material or equipment to be furnished is awarded to him.

1.19 CONTRACT: The written agreement covering the furnishing and delivery of material or work to be performed.

1.20 CONTRACTOR: Any individual, firm or corporation with whom a contract is made by the Agency.

1.21 SUBCONTRACTOR: An individual, partnership or corporation which has a direct contract with a contractor to furnish labor and materials at the job site, or to perform construction labor and furnish material in connection with such labor at the job site.

1.22 CONTRACT BOND: The approved form of security furnished by the contractor and his surety as a guaranty of good faith on the part of the contractor to execute the work in accordance with the terms of the contract.

1.23 CUSTOM FABRICATION: As defined in 29 Del. C. § 6902, the term "custom fabrication" means the offsite fabrication, assembly, or other production of non-standard goods or materials, including components, fixtures or parts thereof, specifically for a public works project. Such goods and materials shall include those used in the following trades or systems: (1) Plumbing or pipe fitting systems, including heating, ventilating, air-conditioning, refrigeration systems, sheet metal or other duct systems; (2) Electrical systems; (3) Mechanical

insulation work; (4) Ornamental iron work; and (5) Commercial signage that does not attempt or appear to direct the movement of traffic on highways or roadways or interfere with, imitate, or resemble any official traffic sign, signal or device.

ARTICLE 2: BIDDER'S REPRESENTATION

2.1 PRE-BID MEETING

2.1.1 A pre-bid meeting for this project will be held at the time and place designated. Attendance at this meeting is a pre-requisite for submitting a Bid, unless this requirement is specifically waived elsewhere in the Bid Documents.

2.2 By submitting a Bid, the Bidder represents that:

2.2.1 The Bidder has read and understands the Bidding Documents and that the Bid is made in accordance therewith.

2.2.2 The Bidder has visited the site, become familiar with existing conditions under which the Work is to be performed, and has correlated the Bidder's personal observations with the requirements of the proposed Contract Documents.

2.2.3 The Bid is based upon the materials, equipment, and systems required by the Bidding Documents without exception.

2.3 JOINT VENTURE REQUIREMENTS

2.3.1 For Public Works Contracts, each Joint Venturer shall be qualified and capable to complete the Work with their own forces.

2.3.2 Included with the Bid submission, and as a requirement to bid, a copy of the executed Joint Venture Agreement shall be submitted and signed by all Joint Venturers involved.

2.3.3 All required Bid Bonds, Performance Bonds, Material and Labor Payment Bonds must be executed by both Joint Venturers and be placed in both of their names.

2.3.4 All required insurance certificates shall name both Joint Venturers.

2.3.5 Both Joint Venturers shall sign the Bid Form.

2.3.6 Both Joint Venturers shall include their Federal E.I. Number with the Bid.

2.3.7 In the event of a mandatory Pre-bid Meeting, each Joint Venturer shall have a representative in attendance.

2.3.8 Due to exceptional circumstances and for good cause shown, one or more of these provisions may be waived at the discretion of the State.

2.4 ASSIGNMENT OF ANTITRUST CLAIMS

2.4.1 As consideration for the award and execution by the Owner of this contract, the Contractor hereby grants, conveys, sells, assigns and transfers to the State of Delaware all of its right, title

and interests in and to all known or unknown causes of action it presently has or may now or hereafter acquire under the antitrust laws of the United States and the State of Delaware, relating to the particular goods or services purchased or acquired by the Owner pursuant to this contract.

ARTICLE 3: BIDDING DOCUMENTS

3.1 COPIES OF BID DOCUMENTS

3.1.1 Bidders may obtain complete sets of the Bidding Documents from the Architectural/Engineering firm designated in the Advertisement or Invitation to Bid in the number and for the deposit sum, if any, stated therein.

3.1.2 Bidders shall use complete sets of Bidding Documents for preparation of Bids. The issuing Agency nor the Architect assumes no responsibility for errors or misinterpretations resulting from the use of incomplete sets of Bidding Documents.

3.1.3 Any errors, inconsistencies or omissions discovered shall be reported to the Architect immediately.

3.1.4 The Agency and Architect may make copies of the Bidding Documents available on the above terms for the purpose of obtaining Bids on the Work. No license or grant of use is conferred by issuance of copies of the Bidding Documents.

3.2 INTERPRETATION OR CORRECTION OF BIDDING DOCUMENTS

3.2.1 The Bidder shall carefully study and compare the Bidding Documents with each other, and with other work being bid concurrently or presently under construction to the extent that it relates to the Work for which the Bid is submitted, shall examine the site and local conditions, and shall report any errors, inconsistencies, or ambiguities discovered to the Architect.

3.2.2 Bidders or Sub-bidders requiring clarification or interpretation of the Bidding Documents shall make a written request to the Architect at least seven days prior to the date for receipt of Bids. Interpretations, corrections and changes to the Bidding Documents will be made by written Addendum. Interpretations, corrections, or changes to the Bidding Documents made in any other manner shall not be binding.

3.2.3 The apparent silence of the specifications as to any detail, or the apparent omission from it of detailed description concerning any point, shall be regarded as meaning that only the best commercial practice is to prevail and only material and workmanship of the first quality are to be used. Proof of specification compliance will be the responsibility of the Bidder.

3.2.4 Unless otherwise provided in the Contract Documents, the Contractor shall provide and pay for all permits, labor, materials, equipment, tools, construction equipment and machinery, water, heat, utilities, transportation, and other facilities and services necessary for the proper execution and completion of the Work.

3.2.5 The Owner will bear the costs for all impact and user fees associated with the project.

3.3 SUBSTITUTIONS

3.3.1 The materials, products and equipment described in the Bidding Documents establish a standard of quality, required function, dimension, and appearance to be met by any proposed substitution. The specification of a particular manufacturer or model number is not intended to be proprietary in any way. Substitutions of products for those named will be considered, providing that the Vendor certifies that the function, quality, and performance characteristics of the material offered is equal or superior to that specified. It shall be the Bidder's responsibility to assure that the proposed substitution will not affect the intent of the design, and to make any installation modifications required to accommodate the substitution.

3.3.2 Requests for substitutions shall be made in writing to the Architect at least ten days prior to the date of the Bid Opening. Such requests shall include a complete description of the proposed substitution, drawings, performance and test data, explanation of required installation modifications due the substitution, and any other information necessary for an evaluation. The burden of proof of the merit of the proposed substitution is upon the proposer. The Architect's decision of approval or disapproval shall be final. The Architect is to notify Owner prior to any approvals.

3.3.3 If the Architect approves a substitution prior to the receipt of Bids, such approval shall be set forth in an Addendum. Approvals made in any other manner shall not be binding.

3.3.4 The Architect shall have no obligation to consider any substitutions after the Contract award.

3.4 ADDENDA

3.4.1 Addenda will be mailed or delivered to all who are known by the Architect to have received a complete set of the Bidding Documents.

3.4.2 Copies of Addenda will be made available for inspection wherever Bidding Documents are on file for that purpose.

3.4.3 No Addenda will be issued later than 2 calendar days prior to the date for receipt of Bids except an Addendum withdrawing the request for Bids or one which extends the time or changes the location for the opening of bids.

3.4.4 Each bidder shall ascertain prior to submitting his Bid that they have received all Addenda issued, and shall acknowledge their receipt in their Bid in the appropriate space. Not acknowledging an issued Addenda could be grounds for determining a bid to be non-responsive.

ARTICLE 4: BIDDING PROCEDURES

4.1 PREPARATION OF BIDS

4.1.1 Submit the bids on the Bid Forms included with the Bidding Documents.

4.1.2 Submit the original Bid Form for each bid. Bid Forms may be removed from the project manual for this purpose.

4.1.3 Execute all blanks on the Bid Form in a non-erasable medium (typewriter or manually in ink).

4.1.4 Where so indicated by the makeup on the Bid Form, express sums in both words and figures, in case of discrepancy between the two, the written amount shall govern.

4.1.5 Interlineations, alterations or erasures must be initialed by the signer of the Bid.

4.1.6 BID ALL REQUESTED ALTERNATES AND UNIT PRICES, IF ANY. If there is no change in the Base Bid for an Alternate, enter "No Change". The Contractor is responsible for verifying that they have received all addenda issued during the bidding period. Work required by Addenda shall automatically become part of the Contract.

4.1.7 Make no additional stipulations on the Bid Form and do not qualify the Bid in any other manner.

4.1.8 Each copy of the Bid shall include the legal name of the Bidder and a statement whether the Bidder is a sole proprietor, a partnership, a corporation, or any legal entity, and each copy shall be signed by the person or persons legally authorized to bind the Bidder to a contract. A Bid by a corporation shall further give the state of incorporation and have the corporate seal affixed. A Bid submitted by an agent shall have a current Power of Attorney attached, certifying agent's authority to bind the Bidder.

4.1.9 Bidder shall complete the Non-Collusion Statement form included with the Bid Forms and include it with their Bid.

4.1.10 In the construction of all Public Works projects for the State of Delaware or any agency thereof, preference in employment of laborers, workers or mechanics shall be given to bona fide legal citizens of the State who have established citizenship by residence of at least 90 days in the State.

4.1.11 Each bidder shall include a signed Affidavit for the Bidder certifying compliance with OMB Regulation 4104 - "Regulations for the Drug Testing of Contractor and Subcontractor Employees Working on "Large Public Works Projects." "Large Public Works" is based upon the current threshold required for bidding Public Works as set by the Purchasing and Contracting Advisory Council.

4.2 BID SECURITY

4.2.1 All bids shall be accompanied by a deposit of either a good and sufficient bond to the agency for the benefit of the agency, with corporate surety authorized to do business in this State, the form of the bond and the surety to be approved by the agency, or a security of the bidder assigned to the agency, for a sum equal to at least 10% of the bid plus all add alternates, or in lieu of the bid bond a security deposit in the form of a certified check, bank treasurer's check, cashier's check, money order, or other prior approved secured deposit assigned to the State. The bid bond need not be for a specific sum, but may be stated to be for a sum equal to 10% of the bid plus all add alternates to which it relates and not to exceed a certain stated sum, if said sum is equal to at least 10% of the bid. The Bid Bond form used shall be the standard OMB form (attached). The bid bond may be an electronic bond and need not be transmitted as a paper document.

4.2.2 The Agency has the right to retain the bid security of Bidders to whom an award is being considered until either a formal contract has been executed and bonds have been furnished or the specified time has elapsed so the Bids may be withdrawn or all Bids have been rejected.

4.2.3 In the event of any successful Bidder refusing or neglecting to execute a formal contract and bond within 20 days of the awarding of the contract, the bid bond or security deposited by the successful bidder shall be forfeited.

4.3 SUBCONTRACTOR LIST

4.3.1 In accordance with Title 29, Chapter 69, Section 6962(d)(10)b of the Delaware Code, each Bidder shall submit with their Bid a completed List of Sub-Contractors included with the Bid Form. NAME ONLY ONE SUBCONTRACTOR FOR EACH TRADE. The bidder must list **in each category** the full name and address (City & State) of the sub-contractor that the Bidder will be using to perform the work and provide material for that subcontractor category. Should the Bidder's listed subcontractor intend to provide any of their subcontractor category of work through a third-tier contractor, the Bidder shall list that third-tier contractor's full name and address (City & State). **If the Bidder intends to perform any category of work itself, it must list its full name and address.** For clarification, if the Bidder intends to perform the work themselves, the Bidder **may not** insert "not applicable", "N/A", "self" or anything other than its own full name and address (City & State). To do so shall cause the bid to be rejected. In addition, the failure to produce a completed subcontractor list with the bid submittal shall cause the bid to be rejected. If you have more than three (3) third-tier contractors to report in any subcontractor category, print out additional page(s) containing the appropriate category, complete the rest of your list of third-tier contractors for that category, notate the addition in parentheses as (CONTINUATION) next to the subcontractor category and an asterisk (*) next to any additional third-tier contractors, and submit it with your bid.

4.3.2 It is the responsibility of the Contractor to ensure that their Subcontractors are in compliance with the provisions of this law. Also, if a Contractor elects to list themselves as a Subcontractor for any category, they must specifically name themselves on the Bid Form and be able to document their capability to act as Subcontractor in that category in accordance with this law.

4.4 AFFIDAVIT OF CONTRACTOR QUALIFICATIONS

4.4.1 In accordance with Title 29, Chapter 69, Section 6962(d)(10)b.3 of the Delaware Code, each Bidder shall submit with their Bid the Affidavit of Contractor Qualifications certifying that the Bidder will abide by the contractor's qualifications outlined in the construction bid specifications for the duration of the contract term. After a contract has been awarded the successful bidder shall not substitute another subcontractor whose name was submitted on the Subcontractor Form except for the reasons in the statute and not without written consent from the awarding agency. Failure to utilize the subcontractors on the list will subject the successful bidder to penalties as outlined in the General Requirements Section 5.2 of the contract.

4.5 AFFIDAVIT OF CRAFT TRAINING COMPLIANCE

4.5.1 In accordance with Title 29, Chapter 69, Section 6962(c)(13) of the Delaware Code, contractors and subcontractors must provide craft training for journeyman and apprentice levels if **all** of the following apply:

A. A project meets the prevailing wage requirement under Title 29, Chapter 69, Section 6960 of the Delaware Code.
B. The contractor employs 10 or more total employees.
C. The project is not a federal highway project

Failure to provide required craft training on the project may subject the successful contractor and/or subcontractor(s) to penalties as outlined in Title 29, Chapter 69, Section 6962(c)(13) of the Delaware Code.

Bidders shall submit the Affidavit of Craft Training Compliance prior to contract execution.

4.6 EQUALITY OF EMPLOYMENT OPPORTUNITY ON PUBLIC WORKS

4.6.1 During the performance of this contract, the contractor agrees as follows:

A. The Contractor will not discriminate against any employee or applicant for employment because of race, creed, sex, color, sexual orientation, gender identity or national origin. The Contractor will take affirmative action to ensure the applicants are employed, and that employees are treated during employment, without regard to their race, creed, sex, color, sexual orientation, gender identity or national origin. Such action shall include, but not be limited to, the following: Employment, upgrading, demotion or transfer; recruitment or recruitment advertising; layoff or termination; rates of pay or other forms of compensation; and selection for training, including apprenticeship. The Contractor agrees to post in conspicuous places available to employees and applicants for employment notices to be provided by the contracting agency setting forth this nondiscrimination clause.

B. The Contractor will, in all solicitations or advertisements for employees placed by or on behalf of the Contractor, state that all qualified applicants will receive consideration for employment without regard to race, creed, sex, color, sexual orientation, gender identity or national origin."

4.7 PREVAILING WAGE REQUIREMENT

4.7.1 Wage Provisions: For renovation and new construction projects whose costs exceed the thresholds contained in Delaware Code, Title 29, Section 6960, the minimum wage rates for various classes of laborers and mechanics shall be as determined by the Department of Labor, Division of Industrial Affairs of the State of Delaware.

4.7.2 The employer shall pay all mechanics and labors employed directly upon the site of work, or engaged in custom fabrication work, as that term is defined in Article 1.23 herein and as also as defined in 29 Del. C § 6902 and described in 29 Del. C. § 6960(b), regardless of where the work is performed, unconditionally and not less often than once a week and without subsequent deduction or rebate on any account, the full amounts accrued at time of payment, computed at wage rates not less than those stated in the specifications, regardless of any contractual relationship which may be alleged to exist between the employer and such laborers and mechanics.

4.7.3 As per 29 Del. C. § 6960(b), the scale of the wages to be paid must be posted by the employer in a prominent and easily accessible place at the site of the work. There may be withheld from

the employer so much of accrued payments as may be considered necessary by the Department of Labor to pay laborers and mechanics employed by the employer the difference between the rates of wages required by the contract to be paid laborers and mechanics on the work and rates of wages received by such laborers and mechanics to be remitted to the Department of Labor for distribution upon resolution of any claims.

4.7.4 Every contract based upon these specifications shall contain a stipulation that sworn payroll information, as required by the Department of Labor, be furnished weekly. The Department of Labor shall keep and maintain the sworn payroll information for a period of 6 months from the last day of the work week covered by the payroll.

4.8 SUBMISSION OF BIDS

4.8.1 Enclose the Bid, the Bid Security, and any other documents required to be submitted with the Bid in a sealed opaque envelope. Address the envelope to the party receiving the Bids. Identify with the project name, project number, and the Bidder's name and address. If the Bid is sent by mail, enclose the sealed envelope in a separate mailing envelope with the notation "BID ENCLOSED" on the face thereof. The State is not responsible for the opening of bids prior to bid opening date and time that are not properly marked.

4.8.2 Deposit Bids at the designated location prior to the time and date for receipt of bids indicated in the Advertisement for Bids. Bids received after the time and date for receipt of bids will be marked “LATE BID” and returned.

4.8.3 Bidder assumes full responsibility for timely delivery at location designated for receipt of bids.

4.8.4 Oral, telephonic or telegraphic bids are invalid and will not receive consideration.

4.8.5 Withdrawn Bids may be resubmitted up to the date and time designated for the receipt of Bids, provided that they are then fully in compliance with these Instructions to Bidders.

4.9 MODIFICATION OR WITHDRAW OF BIDS

4.9.1 Prior to the closing date for receipt of Bids, a Bidder may withdraw a Bid by personal request and by showing proper identification to the Architect. A request for withdraw by letter or fax, if the Architect is notified in writing prior to receipt of fax, is acceptable. A fax directing a modification in the bid price will render the Bid informal, causing it to be ineligible for consideration of award. Telephone directives for modification of the bid price shall not be permitted and will have no bearing on the submitted proposal in any manner.

4.9.2 Bidders submitting Bids that are late shall be notified as soon as practicable and the bid shall be returned.

4.9.3 A Bid may not be modified, withdrawn or canceled by the Bidder during a thirty (30) day period following the time and date designated for the receipt and opening of Bids, and Bidder so agrees in submitting their Bid. Bids shall be binding for 30 days after the date of the Bid opening.

ARTICLE 5: CONSIDERATION OF BIDS

5.1 OPENING/REJECTION OF BIDS

5.1.1 Unless otherwise stated, Bids received on time will be publicly opened and will be read aloud. An abstract of the Bids will be made available to Bidders.

5.1.2 The Agency shall have the right to reject any and all Bids. A Bid not accompanied by a required Bid Security or by other data required by the Bidding Documents, or a Bid which is in any way incomplete or irregular is subject to rejection.

5.1.3 If the Bids are rejected, it will be done within thirty (30) calendar day of the Bid opening.

5.2 COMPARISON OF BIDS

5.2.1 After the Bids have been opened and read, the bid prices will be compared and the result of such comparisons will be made available to the public. Comparisons of the Bids may be based on the Base Bid plus desired Alternates. The Agency shall have the right to accept Alternates in any order or combination.

5.2.2 The Agency reserves the right to waive technicalities, to reject any or all Bids, or any portion thereof, to advertise for new Bids, to proceed to do the Work otherwise, or to abandon the Work, if in the judgment of the Agency or its agent(s), it is in the best interest of the State.

5.2.3 An increase or decrease in the quantity for any item is not sufficient grounds for an increase or decrease in the Unit Price.

5.2.4 The prices quoted are to be those for which the material will be furnished F.O.B. Job Site and include all charges that may be imposed during the period of the Contract.

5.2.5 No qualifying letter or statements in or attached to the Bid, or separate discounts will be considered in determining the low Bid except as may be otherwise herein noted. Cash or separate discounts should be computed and incorporated into Unit Bid Price(s).

5.3 DISQUALIFICATION OF BIDDERS

5.3.1 An agency shall determine that each Bidder on any Public Works Contract is responsible before awarding the Contract. Factors to be considered in determining the responsibility of a Bidder include:

A. The Bidder's financial, physical, personnel or other resources including Subcontracts;

B. The Bidder's record of performance on past public or private construction projects, including, but not limited to, defaults and/or final adjudication or admission of violations of the Prevailing Wage Laws in Delaware or any other state;

C. The Bidder's written safety plan;

D. Whether the Bidder is qualified legally to contract with the State;

E. Whether the Bidder supplied all necessary information concerning its responsibility; and,

F. Any other specific criteria for a particular procurement, which an agency may establish; provided however, that, the criteria be set forth in the Invitation to Bid and is otherwise in conformity with State and/or Federal law.

5.3.2 If an agency determines that a Bidder is nonresponsive and/or nonresponsible, the determination shall be in writing and set forth the basis for the determination. A copy of the determination shall be sent to the affected Bidder within five (5) working days of said determination.

5.3.3 In addition, any one or more of the following causes may be considered as sufficient for the disqualification of a Bidder and the rejection of their Bid or Bids.

5.3.3.1 More than one Bid for the same Contract from an individual, firm or corporation under the same or different names.

5.3.3.2 Evidence of collusion among Bidders.

5.3.3.3 Unsatisfactory performance record as evidenced by past experience.

5.3.3.4 If the Unit Prices are obviously unbalanced either in excess or below reasonable cost analysis values.

5.3.3.5 If there are any unauthorized additions, interlineation, conditional or alternate bids or irregularities of any kind which may tend to make the Bid incomplete, indefinite or ambiguous as to its meaning.

5.3.3.6 If the Bid is not accompanied by the required Bid Security and other data required by the Bidding Documents.

5.3.3.7 If any exceptions or qualifications of the Bid are noted on the Bid Form.

5.4 ACCEPTANCE OF BID AND AWARD OF CONTRACT

5.4.1 A formal Contract shall be executed with the successful Bidder within twenty (20) calendar days after the award of the Contract.

5.4.2 Per Section 6962(d)(13)a., Title 29, Delaware Code, "The contracting agency shall award any public works contract within thirty (30) days of the bid opening to the lowest responsive and responsible Bidder, unless the Agency elects to award on the basis of best value, in which case the election to award on the basis of best value shall be stated in the Invitation To Bid. Any public school district and its board shall award public works contracts in accordance with this section's requirements except it shall award the contract within 60 days of the bid opening."

5.4.3 Each Bid on any Public Works Contract must be deemed responsive by the Agency to be considered for award. A responsive Bid shall conform in all material respects to the requirements and criteria set forth in the Contract Documents and specifications.

5.4.4 The Agency shall have the right to accept Alternates in any order or combination, and to determine the low Bidder on the basis of the sum of the Base Bid, plus accepted Alternates.

5.4.5 The successful Bidder shall execute a formal contract, submit the required Insurance Certificate, and furnish good and sufficient bonds, unless specifically waived in the General Requirements, in accordance with the General Requirement, within twenty (20) days of official notice of contract award. The successful Bidder shall provide, at least two business days prior to contract execution, copies of the Employee Drug Testing Program for the Bidder and all listed Subcontractors. Bonds shall be for the benefit of the Agency with surety in the amount of 100% of the total contract award. Said Bonds shall be conditioned upon the faithful performance of the contract. Bonds shall remain in affect for period of two (2) years after the date of the Certificate of Final Payment.

5.4.6 If the successful Bidder fails to execute the required Contract, Bond and all required information, as aforesaid, within twenty (20) calendar days after the date of official Notice of the Award of the Contract, their Bid guaranty shall immediately be taken and become the property of the State for the benefit of the Agency as liquidated damages, and not as a forfeiture or as a penalty. Award will then be made to the next lowest qualified Bidder of the Work or readvertised, as the Agency may decide.

5.4.7 Each bidder shall supply with its bid its taxpayer identification number (i.e., federal employer identification number or social security number) and should the vendor be awarded a contract, such vendor shall provide to the agency the taxpayer identification license numbers of such subcontractors. Such numbers shall be provided on the later of the date on which such subcontractor is required to be identified or the time the contract is executed. The successful Bidder shall provide to the agency to which it is contracting, within 30 days of entering into such public works contract, copies of all Delaware Business licenses of subcontractors and/or independent contractors that will perform work for such public works contract. However, if a subcontractor or independent contractor is hired or contracted more than 20 days after the Bidder entered the public works contract the Delaware Business license of such subcontractor or independent contractor shall be provided to the agency within 10 days of being contracted or hired.

5.4.8 The Bid Security shall be returned to the successful Bidder upon the execution of the formal contract. The Bid Securities of unsuccessful bidders shall be returned within thirty (30) calendar days after the opening of the Bids.

ARTICLE 6: POST-BID INFORMATION

6.1 CONTRACTOR'S QUALIFICATION STATEMENT

6.1.1 Bidders to whom an award of a Contract is under consideration shall, if requested by the Agency, submit a properly executed AIA Document A305, Contractor's Qualification Statement, unless such a statement has been previously required and submitted.

6.2 Bidders to whom an award of a Contract has been made must produce their Delaware Business License before the Contract can be executed.

ARTICLE 7: PERFORMANCE BOND AND PAYMENT BOND

7.1 BOND REQUIREMENTS

7.1.1 The cost of furnishing the required Bonds, that are stipulated in the Bidding Documents, shall be included in the Bid.

7.1.2 If the Bidder is required by the Agency to secure a bond from other than the Bidder's usual sources, changes in cost will be adjusted as provide in the Contract Documents.

7.1.3 The Performance and Payment Bond forms used shall be the standard OMB forms (attached). The Performance Bond and/or the Payment Bond may be electronic bonds and need not be transmitted as paper documents.

7.2 TIME OF DELIVERY AND FORM OF BONDS

7.2.1 The bonds shall be dated on or after the date of the Contract.

7.2.2 The Bidder shall require the attorney-in-fact who executes the required bonds on behalf of the surety to affix a certified and current copy of the power of attorney.

ARTICLE 8: FORM OF AGREEMENT BETWEEN OWNER AND CONTRACTOR

8.1 Unless otherwise required in the Bidding Documents, the Agreement for the Work will be written on AIA Document A101, Standard Form of Agreement Between Owner and Contractor Where the Basis of Payment is a Stipulated Sum.

END OF SECTION

SEE ADDENCUM 1

STATE OF DELAWARE
OFFICE OF MANAGEMENT AND BUDGET
DIVISION OF FACILITIES MANAGEMENT
CONTRACT #MC3512000045A
NORTHEAST STATE SERVICE CENTER REIMAGINING PROJECT
WILMINGTON, DELAWARE

SECTION 00 41 13

BID FORM

For Bids Due: _____

To: State of Delaware
Division of Facilities Management
Haslet Armory
122 Martin Luther King Jr. Blvd
Dover, DE 19901

Name of Bidder: _____

Delaware Business License No.: _____ **Taxpayer ID No.:** _____

(Other License Nos.): _____

Phone No.: ( ) _____ - _____ **Fax No.: ( ) _____ - _____**

The undersigned, representing that he has read and understands the Bidding Documents and that this bid is made in accordance therewith, that he has visited the site and has familiarized himself with the local conditions under which the Work is to be performed, and that his bid is based upon the materials, systems and equipment described in the Bidding Documents without exception, hereby proposes and agrees to provide all labor, materials, plant, equipment, supplies, transport and other facilities required to execute the work described by the aforesaid documents for the lump sum itemized below:

$_____
($)

ALLOWANCES

Allowances conform to applicable project specification section. Refer to specifications section 01 21 00 – Allowances for a complete description of the following Allowances to be included in the Base Bid.

ALLOWANCE. No. 1: Provide an allowance of $30,000.00 for unforeseen circumstances.

_____Acknowledged

STATE OF DELAWARE
OFFICE OF MANAGEMENT AND BUDGET
DIVISION OF FACILITIES MANAGEMENT
CONTRACT #MC3512000045A
NORTHEAST STATE SERVICE CENTER REIMAGINING PROJECT
WILMINGTON, DELAWARE

BID FORM

I/We acknowledge Addendums numbered _____ and the price(s) submitted include any cost/schedule impact they may have.

This bid shall remain valid and cannot be withdrawn for thirty (30) days from the date of opening of bids (60 days for School Districts and Department of Education), and the undersigned shall abide by the Bid Security forfeiture provisions. Bid Security is attached to this Bid.

The Owner shall have the right to reject any or all bids, and to waive any informality or irregularity in any bid received.

This bid is based upon work being accomplished by the Sub-Contractors named on the list attached to this bid.

Should I/We be awarded this contract, I/We pledge to achieve substantial completion of all the work within _____calendar days of the Notice to Proceed.

The undersigned represents and warrants that he has complied and shall comply with all requirements of local, state, and national laws; that no legal requirement has been or shall be violated in making or accepting this bid, in awarding the contract to him or in the prosecution of the work required; that the bid is legal and firm; that he has not, directly or indirectly, entered into any agreement, participated in any collusion, or otherwise taken action in restraint of free competitive bidding.

Upon receipt of written notice of the acceptance of this Bid, the Bidder shall, within twenty (20) calendar days, execute the agreement in the required form and deliver the Contract Bonds, and Insurance Certificates, required by the Contract Documents.

I am / We are an Individual / a Partnership / a Corporation

By _____ Trading as _____
(Individual's / General Partner's / Corporate Name)

_____
(State of Corporation)

Business Address:_____
_____
_____
_____

Witness: _____ **By:** _____
(Authorized Signature)

(SEAL)

_____
(Title)

Date: _____

ATTACHMENTS

Sub-Contractor List
Non-Collusion Statement
Affidavit of Employee Drug Testing Program
Affidavit of Contractor Qualifications
Bid Security
(Others as Required by Project Manuals)

BID FORM

SUBCONTRACTOR LIST

In accordance with Title 29, Chapter 69, Section 6962(d)(10)b of the Delaware Code, the following subcontractor listing must accompany any bid submittal. The bidder must list **in each category** the full name and address (City & State) of the sub-contractor that the bidder will be using to perform the work and provide material for that subcontractor category. Should the bidder's listed subcontractor intend to provide any of their subcontractor category of work through a third-tier contractor, the bidder shall list that third-tier contractor's full name and address (City & State). **If the bidder intends to perform any category of work itself, it must list its full name and address.** For clarification, if the bidder intends to perform the work themselves, the bidder **may not** insert "not applicable", "N/A", "self" or anything other than its own full name and address (City & State). To do so shall cause the bid to be rejected. In addition, the failure to produce a completed subcontractor list with the bid submittal shall cause the bid to be rejected. If you have more than three (3) third-tier contractors to report in any subcontractor category, print out additional page(s) containing the appropriate category, complete the rest of your list of third-tier contractors for that category, notate the addition in parentheses as (CONTINUATION) next to the subcontractor category and an asterisk (*) next to any additional third-tier contractors, and submit it with your bid.

Subcontractor Category	Subcontractor	Address (City & State)	Subcontractors tax-payer ID # or Delaware Business license #
1.			
A.			
B.			
C.			
2.			
A.			
B.			
C.			

3. _____ _____ _____

   A. _____ _____ _____

   B. _____ _____ _____

   C. _____ _____ _____

4. _____ _____ _____

   A. _____ _____ _____

   B. _____ _____ _____

   C. _____ _____ _____

5. _____ _____ _____

   A. _____ _____ _____

   B. _____ _____ _____

   C. _____ _____ _____

BID FORM

NON-COLLUSION STATEMENT

This is to certify that the undersigned bidder has neither directly nor indirectly, entered into any agreement, participated in any collusion or otherwise taken any action in restraint of free competitive bidding in connection with this proposal submitted this date *(to the Office of Management and Budget, Division of Facilities Management)*.

All the terms and conditions of Contract #MC3512000045A have been thoroughly examined and are understood.

NAME OF BIDDER: _____

AUTHORIZED REPRESENTATIVE (TYPED): _____

AUTHORIZED REPRESENTATIVE (SIGNATURE): _____

TITLE: _____

ADDRESS OF BIDDER: _____

_____

_____

E-MAIL: _____

PHONE NUMBER: _____

Sworn to and Subscribed before me this _____ day of _____ 20_____.

My Commission expires _____. NOTARY PUBLIC _____.

THIS PAGE MUST BE SIGNED AND NOTARIZED FOR YOUR BID TO BE CONSIDERED.

AFFIDAVIT
OF
EMPLOYEE DRUG TESTING PROGRAM

4104 Regulations for the Drug Testing of Contractor and Subcontractor Employees Working on Large Public Works Projects requires that Contractors and Subcontractors implement a program of mandatory drug testing for Employees who work on Large Public Works Contracts funded all or in part with public funds.

We hereby certify that we have in place or will implement during the entire term of the contract a Mandatory Drug Testing Program for our employees on the jobsite, including subcontractors, that complies with this regulation:

Contractor/Subcontractor Name: _____

Contractor/Subcontractor Address: _____

_____

_____

Authorized Representative (typed or printed): _____

Authorized Representative (signature): _____

Title: _____

Sworn to and Subscribed before me this _____day of _____ 20_____.

My Commission expires _____. NOTARY PUBLIC _____.

<u>THIS PAGE MUST BE SIGNED AND NOTARIZED FOR YOUR BID TO BE CONSIDERED.</u>

STATE OF DELAWARE
OFFICE OF MANAGEMENT AND BUDGET
DIVISION OF FACILITIES MANAGEMENT
CONTRACT #MC3512000045A
NORTHEAST STATE SERVICE CENTER REIMAGINING PROJECT
WILMINGTON, DELAWARE

AFFIDAVIT OF CONTRACTOR QUALIFICATIONS

We hereby certify that we will abide by the contractor's qualifications outlined in the construction bid specifications for the duration of the contract term.

In accordance with Title 29, Chapter 69, Section 6962(d)(10)b.3 of the Delaware Code, after a contract has been awarded the successful bidder shall not substitute another subcontractor whose name was submitted on the Subcontractor Form except for the reasons in the statute and not without written consent from the awarding agency. Failure to utilize the subcontractors on the list will subject the successful bidder to penalties as outlined in the General Requirements Section 5.2 of the contract.

Contractor Name: _____

Contractor Address: _____

_____

_____

Authorized Representative (typed or printed): _____

Authorized Representative (signature): _____

Title: _____

Sworn to and Subscribed before me this _____day of _____ 20_____.

My Commission expires _____. NOTARY PUBLIC _____.

THIS PAGE MUST BE SIGNED AND NOTARIZED FOR YOUR BID TO BE CONSIDERED.

BID BOND

TO ACCOMPANY PROPOSAL
(Not necessary if security is used)

KNOW ALL MEN BY THESE PRESENTS That: _____ _____of _____ in the County of _____ _____and State of _____as **Principal**, and _____ _____ of _____ in the County of _____ and State of _____ as **Surety**, legally authorized to do business in the State of Delaware ("**State**"), are held and firmly unto the **State** in the sum of _____ _____ Dollars ($_____), or _____ percent not to exceed _____ _____ Dollars ($_____ _____) of amount of bid on Contract No. MC3512000045A to be paid to the **State** for the use and benefit of the Office of Management and Budget, Division of Facilities Management for which payment well and truly to be made, we do bind ourselves, our and each of our heirs, executors, administrators, and successors, jointly and severally for and in the whole firmly by these presents.

NOW THE CONDITION OF THIS OBLIGATION IS SUCH That if the above bonded **Principal** who has submitted to the Office of Management and Budget, Division of Facilities Management a certain proposal to enter into this contract for the furnishing of certain material and/or services within the **State**, shall be awarded this Contract, and if said **Principal** shall well and truly enter into and execute this Contract as may be required by the terms of this Contract and approved by the Office of Management and Budget, Division of Facilities Management this Contract to be entered into within twenty days after the date of official notice of the award thereof in accordance with the terms of said proposal, then this obligation shall be void or else to be and remain in full force and virtue.

Sealed with _____ seal and dated this _____day of _____ in the year of our Lord two thousand and _____ (20___).

SEALED, AND DELIVERED IN THE
Presence of

_____
Name of Bidder (Organization)

Corporate Seal

By: _____
Authorized Signature

Attest _____

_____
Title

_____
Name of Surety

Witness:_____

By: _____

_____
Title

This page intentionally left blank.

SECTION 00 52 13

STANDARD FORM OF AGREEMENT BETWEEN OWNER AND CONTRACTOR A101-2017 & AIA DOCUMENT A101 – 2017 EXHIBIT A

The contract to be utilized on this project shall be the "Standard Form of Agreement Between Owner and Contractor" AIA Document A101-2017, including AIA Document A101 – 2017 Exhibit A, as well as Supplements to A101-2017 and Exhibit A and the State of Delaware's General Requirements.

This page intentionally left blank.

AIA® Document A101™ – 2017

Standard Form of Agreement Between Owner and Contractor *where the basis of payment is a Stipulated Sum*

AGREEMENT made as of the day of in the year
(In words, indicate day, month and year.)

BETWEEN the Owner:
(Name, legal status, address and other information)

and the Contractor:
(Name, legal status, address and other information)

for the following Project:
(Name, location and detailed description)

The Architect:
(Name, legal status, address and other information)

The Owner and Contractor agree as follows.

ADDITIONS AND DELETIONS:
The author of this document has added information needed for its completion. The author may also have revised the text of the original AIA standard form. An *Additions and Deletions Report* that notes added information as well as revisions to the standard form text is available from the author and should be reviewed. A vertical line in the left margin of this document indicates where the author has added necessary information and where the author has added to or deleted from the original AIA text.

This document has important legal consequences. Consultation with an attorney is encouraged with respect to its completion or modification.

The parties should complete A101™–2017, Exhibit A, Insurance and Bonds, contemporaneously with this Agreement. AIA Document A201™–2017, General Conditions of the Contract for Construction, is adopted in this document by reference. Do not use with other general conditions unless this document is modified.

SAMPLE

Init.
/

AIA Document A101™ – 2017. Copyright © 1915, 1918, 1925, 1937, 1951, 1958, 1961, 1963, 1967, 1974, 1977, 1987, 1991, 1997, 2007 and 2017 by The American Institute of Architects. **All rights reserved. WARNING: This AIA® Document is protected by U.S. Copyright Law and International Treaties. Unauthorized reproduction or distribution of this AIA® Document, or any portion of it, may result in severe civil and criminal penalties, and will be prosecuted to the maximum extent possible under the law.** This document was produced by AIA software at 08:33:05 ET on 11/19/2018 under Order No.5013131753 which expires on 10/31/2019, and is not for resale.
User Notes: (2034395503)

TABLE OF ARTICLES

1 THE CONTRACT DOCUMENTS

2 THE WORK OF THIS CONTRACT

3 DATE OF COMMENCEMENT AND SUBSTANTIAL COMPLETION

4 CONTRACT SUM

5 PAYMENTS

6 DISPUTE RESOLUTION

7 TERMINATION OR SUSPENSION

8 MISCELLANEOUS PROVISIONS

9 ENUMERATION OF CONTRACT DOCUMENTS

EXHIBIT A INSURANCE AND BONDS

SAMPLE

ARTICLE 1 THE CONTRACT DOCUMENTS

The Contract Documents consist of this Agreement, Conditions of the Contract (General, Supplementary, and other Conditions), Drawings, Specifications, Addenda issued prior to execution of this Agreement, other documents listed in this Agreement, and Modifications issued after execution of this Agreement, all of which form the Contract, and are as fully a part of the Contract as if attached to this Agreement or repeated herein. The Contract represents the entire and integrated agreement between the parties hereto and supersedes prior negotiations, representations, or agreements, either written or oral. An enumeration of the Contract Documents, other than a Modification, appears in Article 9.

ARTICLE 2 THE WORK OF THIS CONTRACT

The Contractor shall fully execute the Work described in the Contract Documents, except as specifically indicated in the Contract Documents to be the responsibility of others.

ARTICLE 3 DATE OF COMMENCEMENT AND SUBSTANTIAL COMPLETION

§ 3.1 The date of commencement of the Work shall be:
(Check one of the following boxes.)

[ ] The date of this Agreement.

[ ] A date set forth in a notice to proceed issued by the Owner.

[ ] Established as follows:
(Insert a date or a means to determine the date of commencement of the Work.)

If a date of commencement of the Work is not selected, then the date of commencement shall be the date of this Agreement.

§ 3.2 The Contract Time shall be measured from the date of commencement of the Work.

§ 3.3 Substantial Completion

§ 3.3.1 Subject to adjustments of the Contract Time as provided in the Contract Documents, the Contractor shall achieve Substantial Completion of the entire Work:
(Check one of the following boxes and complete the necessary information.)

AIA Document A101™ – 2017. Copyright © 1915, 1918, 1925, 1937, 1951, 1958, 1961, 1963, 1967, 1974, 1977, 1987, 1991, 1997, 2007 and 2017 by The American Institute of Architects. **All rights reserved. WARNING: This AIA® Document is protected by U.S. Copyright Law and International Treaties. Unauthorized reproduction or distribution of this AIA® Document, or any portion of it, may result in severe civil and criminal penalties, and will be prosecuted to the maximum extent possible under the law.** This document was produced by AIA software at 08:33:05 ET on 11/19/2018 under Order No.5013131753 which expires on 10/31/2019, and is not for resale.
User Notes: (2034395503)

[ ] Not later than ( ) calendar days from the date of commencement of the Work.

[ ] By the following date:

§ 3.3.2 Subject to adjustments of the Contract Time as provided in the Contract Documents, if portions of the Work are to be completed prior to Substantial Completion of the entire Work, the Contractor shall achieve Substantial Completion of such portions by the following dates:

Portion of Work	Substantial Completion Date

§ 3.3.3 If the Contractor fails to achieve Substantial Completion as provided in this Section 3.3, liquidated damages, if any, shall be assessed as set forth in Section 4.5.

ARTICLE 4 CONTRACT SUM

§ 4.1 The Owner shall pay the Contractor the Contract Sum in current funds for the Contractor's performance of the Contract. The Contract Sum shall be ($), subject to additions and deductions as provided in the Contract Documents.

§ 4.2 Alternates

§ 4.2.1 Alternates, if any, included in the Contract Sum:

Item	Price

§ 4.2.2 Subject to the conditions noted below, the following alternates may be accepted by the Owner following execution of this Agreement. Upon acceptance, the Owner shall issue a Modification to this Agreement.
(Insert below each alternate and the conditions that must be met for the Owner to accept the alternate.)

Item	Price	Conditions for Acceptance

§ 4.3 Allowances, if any, included in the Contract Sum:
(Identify each allowance.)

Item	Price

§ 4.4 Unit prices, if any:
(Identify the item and state the unit price and quantity limitations, if any, to which the unit price will be applicable.)

Item	Units and Limitations	Price per Unit ($0.00)

§ 4.5 Liquidated damages, if any:
(Insert terms and conditions for liquidated damages, if any.)

§ 4.6 Other:
(Insert provisions for bonus or other incentives, if any, that might result in a change to the Contract Sum.)

SAMPLE

AIA Document A101™ – 2017. Copyright © 1915, 1918, 1925, 1937, 1951, 1958, 1961, 1963, 1967, 1974, 1977, 1987, 1991, 1997, 2007 and 2017 by The American Institute of Architects. **All rights reserved. WARNING: This AIA® Document is protected by U.S. Copyright Law and International Treaties. Unauthorized reproduction or distribution of this AIA® Document, or any portion of it, may result in severe civil and criminal penalties, and will be prosecuted to the maximum extent possible under the law.** This document was produced by AIA software at 08:33:05 ET on 11/19/2018 under Order No.5013131753 which expires on 10/31/2019, and is not for resale.
User Notes: (2034395503)

ARTICLE 5 PAYMENTS

§ 5.1 Progress Payments

§ 5.1.1 Based upon Applications for Payment submitted to the Architect by the Contractor and Certificates for Payment issued by the Architect, the Owner shall make progress payments on account of the Contract Sum to the Contractor as provided below and elsewhere in the Contract Documents.

§ 5.1.2 The period covered by each Application for Payment shall be one calendar month ending on the last day of the month, or as follows:

§ 5.1.3 Provided that an Application for Payment is received by the Architect not later than the day of a month, the Owner shall make payment of the amount certified to the Contractor not later than the day of the month. If an Application for Payment is received by the Architect after the application date fixed above, payment of the amount certified shall be made by the Owner not later than ( ) days after the Architect receives the Application for Payment.
(Federal, state or local laws may require payment within a certain period of time.)

§ 5.1.4 Each Application for Payment shall be based on the most recent schedule of values submitted by the Contractor in accordance with the Contract Documents. The schedule of values shall allocate the entire Contract Sum among the various portions of the Work. The schedule of values shall be prepared in such form, and supported by such data to substantiate its accuracy, as the Architect may require. This schedule of values shall be used as a basis for reviewing the Contractor's Applications for Payment.

§ 5.1.5 Applications for Payment shall show the percentage of completion of each portion of the Work as of the end of the period covered by the Application for Payment.

§ 5.1.6 In accordance with AIA Document A201™–2017, General Conditions of the Contract for Construction, and subject to other provisions of the Contract Documents, the amount of each progress payment shall be computed as follows:

§ 5.1.6.1 The amount of each progress payment shall first include:

- **.1** That portion of the Contract Sum properly allocable to completed Work;
- **.2** That portion of the Contract Sum properly allocable to materials and equipment delivered and suitably stored at the site for subsequent incorporation in the completed construction, or, if approved in advance by the Owner, suitably stored off the site at a location agreed upon in writing; and
- **.3** That portion of Construction Change Directives that the Architect determines, in the Architect's professional judgment, to be reasonably justified.

§ 5.1.6.2 The amount of each progress payment shall then be reduced by:

- **.1** The aggregate of any amounts previously paid by the Owner;
- **.2** The amount, if any, for Work that remains uncorrected and for which the Architect has previously withheld a Certificate for Payment as provided in Article 9 of AIA Document A201–2017;
- **.3** Any amount for which the Contractor does not intend to pay a Subcontractor or material supplier, unless the Work has been performed by others the Contractor intends to pay;
- **.4** For Work performed or defects discovered since the last payment application, any amount for which the Architect may withhold payment, or nullify a Certificate of Payment in whole or in part, as provided in Article 9 of AIA Document A201–2017; and
- **.5** Retainage withheld pursuant to Section 5.1.7.

§ 5.1.7 Retainage

§ 5.1.7.1 For each progress payment made prior to Substantial Completion of the Work, the Owner may withhold the following amount, as retainage, from the payment otherwise due:
(Insert a percentage or amount to be withheld as retainage from each Application for Payment. The amount of retainage may be limited by governing law.)

SAMPLE

AIA Document A101™ – 2017. Copyright © 1915, 1918, 1925, 1937, 1951, 1958, 1961, 1963, 1967, 1974, 1977, 1987, 1991, 1997, 2007 and 2017 by The American Institute of Architects. **All rights reserved. WARNING: This AIA® Document is protected by U.S. Copyright Law and International Treaties. Unauthorized reproduction or distribution of this AIA® Document, or any portion of it, may result in severe civil and criminal penalties, and will be prosecuted to the maximum extent possible under the law.** This document was produced by AIA software at 08:33:05 ET on 11/19/2018 under Order No.5013131753 which expires on 10/31/2019, and is not for resale.
User Notes: (2034395503)

§ 5.1.7.1.1 The following items are not subject to retainage:
(Insert any items not subject to the withholding of retainage, such as general conditions, insurance, etc.)

§ 5.1.7.2 Reduction or limitation of retainage, if any, shall be as follows:
(If the retainage established in Section 5.1.7.1 is to be modified prior to Substantial Completion of the entire Work, including modifications for Substantial Completion of portions of the Work as provided in Section 3.3.2, insert provisions for such modifications.)

§ 5.1.7.3 Except as set forth in this Section 5.1.7.3, upon Substantial Completion of the Work, the Contractor may submit an Application for Payment that includes the retainage withheld from prior Applications for Payment pursuant to this Section 5.1.7. The Application for Payment submitted at Substantial Completion shall not include retainage as follows:
(Insert any other conditions for release of retainage upon Substantial Completion.)

§ 5.1.8 If final completion of the Work is materially delayed through no fault of the Contractor, the Owner shall pay the Contractor any additional amounts in accordance with Article 9 of AIA Document A201–2017.

§ 5.1.9 Except with the Owner's prior approval, the Contractor shall not make advance payments to suppliers for materials or equipment which have not been delivered and stored at the site.

§ 5.2 Final Payment
§ 5.2.1 Final payment, constituting the entire unpaid balance of the Contract Sum, shall be made by the Owner to the Contractor when

- **.1** the Contractor has fully performed the Contract except for the Contractor's responsibility to correct Work as provided in Article 12 of AIA Document A201–2017, and to satisfy other requirements, if any, which extend beyond final payment; and
- **.2** a final Certificate for Payment has been issued by the Architect.

§ 5.2.2 The Owner's final payment to the Contractor shall be made no later than 30 days after the issuance of the Architect's final Certificate for Payment, or as follows:

§ 5.3 Interest
Payments due and unpaid under the Contract shall bear interest from the date payment is due at the rate stated below, or in the absence thereof, at the legal rate prevailing from time to time at the place where the Project is located.
(Insert rate of interest agreed upon, if any.)

%

ARTICLE 6 DISPUTE RESOLUTION
§ 6.1 Initial Decision Maker
The Architect will serve as the Initial Decision Maker pursuant to Article 15 of AIA Document A201–2017, unless the parties appoint below another individual, not a party to this Agreement, to serve as the Initial Decision Maker.
(If the parties mutually agree, insert the name, address and other contact information of the Initial Decision Maker, if other than the Architect.)

SAMPLE

AIA Document A101™ – 2017. Copyright © 1915, 1918, 1925, 1937, 1951, 1958, 1961, 1963, 1967, 1974, 1977, 1987, 1991, 1997, 2007 and 2017 by The American Institute of Architects. **All rights reserved. WARNING: This AIA® Document is protected by U.S. Copyright Law and International Treaties. Unauthorized reproduction or distribution of this AIA® Document, or any portion of it, may result in severe civil and criminal penalties, and will be prosecuted to the maximum extent possible under the law.** This document was produced by AIA software at 08:33:05 ET on 11/19/2018 under Order No.5013131753 which expires on 10/31/2019, and is not for resale.
User Notes: (2034395503)

§ 6.2 Binding Dispute Resolution
For any Claim subject to, but not resolved by, mediation pursuant to Article 15 of AIA Document A201–2017, the method of binding dispute resolution shall be as follows:
(Check the appropriate box.)

[ ] Arbitration pursuant to Section 15.4 of AIA Document A201–2017

[ ] Litigation in a court of competent jurisdiction

[ ] Other *(Specify)*

If the Owner and Contractor do not select a method of binding dispute resolution, or do not subsequently agree in writing to a binding dispute resolution method other than litigation, Claims will be resolved by litigation in a court of competent jurisdiction.

ARTICLE 7 TERMINATION OR SUSPENSION
§ 7.1 The Contract may be terminated by the Owner or the Contractor as provided in Article 14 of AIA Document A201–2017.

§ 7.1.1 If the Contract is terminated for the Owner's convenience in accordance with Article 14 of AIA Document A201–2017, then the Owner shall pay the Contractor a termination fee as follows:
(Insert the amount of, or method for determining, the fee, if any, payable to the Contractor following a termination for the Owner's convenience.)

SAMPLE

§ 7.2 The Work may be suspended by the Owner as provided in Article 14 of AIA Document A201–2017.

ARTICLE 8 MISCELLANEOUS PROVISIONS
§ 8.1 Where reference is made in this Agreement to a provision of AIA Document A201–2017 or another Contract Document, the reference refers to that provision as amended or supplemented by other provisions of the Contract Documents.

§ 8.2 The Owner's representative:
(Name, address, email address, and other information)

§ 8.3 The Contractor's representative:
(Name, address, email address, and other information)

AIA Document A101™ – 2017. Copyright © 1915, 1918, 1925, 1937, 1951, 1958, 1961, 1963, 1967, 1974, 1977, 1987, 1991, 1997, 2007 and 2017 by The American Institute of Architects. **All rights reserved. WARNING: This AIA® Document is protected by U.S. Copyright Law and International Treaties. Unauthorized reproduction or distribution of this AIA® Document, or any portion of it, may result in severe civil and criminal penalties, and will be prosecuted to the maximum extent possible under the law.** This document was produced by AIA software at 08:33:05 ET on 11/19/2018 under Order No.5013131753 which expires on 10/31/2019, and is not for resale.
User Notes: (2034395503)

§ 8.4 Neither the Owner's nor the Contractor's representative shall be changed without ten days' prior notice to the other party.

§ 8.5 Insurance and Bonds

§ 8.5.1 The Owner and the Contractor shall purchase and maintain insurance as set forth in AIA Document A101™–2017, Standard Form of Agreement Between Owner and Contractor where the basis of payment is a Stipulated Sum, Exhibit A, Insurance and Bonds, and elsewhere in the Contract Documents.

§ 8.5.2 The Contractor shall provide bonds as set forth in AIA Document A101™–2017 Exhibit A, and elsewhere in the Contract Documents.

§ 8.6 Notice in electronic format, pursuant to Article 1 of AIA Document A201–2017, may be given in accordance with AIA Document E203™–2013, Building Information Modeling and Digital Data Exhibit, if completed, or as otherwise set forth below:
(If other than in accordance with AIA Document E203–2013, insert requirements for delivering notice in electronic format such as name, title, and email address of the recipient and whether and how the system will be required to generate a read receipt for the transmission.)

§ 8.7 Other provisions:

SAMPLE

ARTICLE 9 ENUMERATION OF CONTRACT DOCUMENTS

§ 9.1 This Agreement is comprised of the following documents:

.1 AIA Document A101™–2017, Standard Form of Agreement Between Owner and Contractor

.2 AIA Document A101™–2017, Exhibit A, Insurance and Bonds

.3 AIA Document A201™–2017, General Conditions of the Contract for Construction

.4 AIA Document E203™–2013, Building Information Modeling and Digital Data Exhibit, dated as indicated below:
(Insert the date of the E203-2013 incorporated into this Agreement.)

.5 Drawings

Number	Title	Date

.6 Specifications

Section	Title	Date	Pages

.7 Addenda, if any:

Number	Date	Pages

Portions of Addenda relating to bidding or proposal requirements are not part of the Contract Documents unless the bidding or proposal requirements are also enumerated in this Article 9.

.8 Other Exhibits:
(Check all boxes that apply and include appropriate information identifying the exhibit where required.)

AIA Document A101™ – 2017. Copyright © 1915, 1918, 1925, 1937, 1951, 1958, 1961, 1963, 1967, 1974, 1977, 1987, 1991, 1997, 2007 and 2017 by The American Institute of Architects. **All rights reserved. WARNING: This AIA® Document is protected by U.S. Copyright Law and International Treaties. Unauthorized reproduction or distribution of this AIA® Document, or any portion of it, may result in severe civil and criminal penalties, and will be prosecuted to the maximum extent possible under the law.** This document was produced by AIA software at 08:33:05 ET on 11/19/2018 under Order No.5013131753 which expires on 10/31/2019, and is not for resale.
User Notes:

[ ] AIA Document E204™–2017, Sustainable Projects Exhibit, dated as indicated below:
(Insert the date of the E204-2017 incorporated into this Agreement.)

[ ] The Sustainability Plan:

Title	Date	Pages

[ ] Supplementary and other Conditions of the Contract:

Document	Title	Date	Pages

.9 Other documents, if any, listed below:
(List here any additional documents that are intended to form part of the Contract Documents. AIA Document A201™–2017 provides that the advertisement or invitation to bid, Instructions to Bidders, sample forms, the Contractor's bid or proposal, portions of Addenda relating to bidding or proposal requirements, and other information furnished by the Owner in anticipation of receiving bids or proposals, are not part of the Contract Documents unless enumerated in this Agreement. Any such documents should be listed here only if intended to be part of the Contract Documents.)

SAMPLE

This Agreement entered into as of the day and year first written above.

OWNER *(Signature)*	**CONTRACTOR** *(Signature)*
(Printed name and title)	*(Printed name and title)*

AIA Document A101™ – 2017. Copyright © 1915, 1918, 1925, 1937, 1951, 1958, 1961, 1963, 1967, 1974, 1977, 1987, 1991, 1997, 2007 and 2017 by The American Institute of Architects. **All rights reserved. WARNING: This AIA® Document is protected by U.S. Copyright Law and International Treaties. Unauthorized reproduction or distribution of this AIA® Document, or any portion of it, may result in severe civil and criminal penalties, and will be prosecuted to the maximum extent possible under the law.** This document was produced by AIA software at 08:33:05 ET on 11/19/2018 under Order No.5013131753 which expires on 10/31/2019, and is not for resale.
User Notes: (2034395503)

AIA® Document A101™ – 2017 Exhibit A

Insurance and Bonds

This Insurance and Bonds Exhibit is part of the Agreement, between the Owner and the Contractor, dated the day of in the year
(In words, indicate day, month and year.)

for the following **PROJECT**:
(Name and location or address)

THE OWNER:
(Name, legal status and address)

THE CONTRACTOR:
(Name, legal status and address)

ADDITIONS AND DELETIONS:
The author of this document has added information needed for its completion. The author may also have revised the text of the original AIA standard form. An *Additions and Deletions Report* that notes added information as well as revisions to the standard form text is available from the author and should be reviewed. A vertical line in the left margin of this document indicates where the author has added necessary information and where the author has added to or deleted from the original AIA text.

This document has important legal consequences. Consultation with an attorney is encouraged with respect to its completion or modification.

This document is intended to be used in conjunction with AIA Document A201™–2017, General Conditions of the Contract for Construction. Article 11 of A201™–2017 contains additional insurance provisions.

SAMPLE

TABLE OF ARTICLES

A.1 GENERAL

A.2 OWNER'S INSURANCE

A.3 CONTRACTOR'S INSURANCE AND BONDS

A.4 SPECIAL TERMS AND CONDITIONS

ARTICLE A.1 GENERAL

The Owner and Contractor shall purchase and maintain insurance, and provide bonds, as set forth in this Exhibit. As used in this Exhibit, the term General Conditions refers to AIA Document A201™–2017, General Conditions of the Contract for Construction.

ARTICLE A.2 OWNER'S INSURANCE

§ A.2.1 General

Prior to commencement of the Work, the Owner shall secure the insurance, and provide evidence of the coverage, required under this Article A.2 and, upon the Contractor's request, provide a copy of the property insurance policy or policies required by Section A.2.3. The copy of the policy or policies provided shall contain all applicable conditions, definitions, exclusions, and endorsements.

§ A.2.2 Liability Insurance

The Owner shall be responsible for purchasing and maintaining the Owner's usual general liability insurance.

§ A.2.3 Required Property Insurance

§ A.2.3.1 Unless this obligation is placed on the Contractor pursuant to Section A.3.3.2.1, the Owner shall purchase and maintain, from an insurance company or insurance

AIA Document A101™ – 2017 Exhibit A. Copyright © 2017 by The American Institute of Architects. **All rights reserved. WARNING: This AIA® Document is protected by U.S. Copyright Law and International Treaties. Unauthorized reproduction or distribution of this AIA® Document, or any portion of it, may result in severe civil and criminal penalties, and will be prosecuted to the maximum extent possible under the law.** This document was produced by AIA software at 08:33:21 ET on 11/19/2018 under Order No.5013131753 which expires on 10/31/2019, and is not for resale.
User Notes: (1966621747)

companies lawfully authorized to issue insurance in the jurisdiction where the Project is located, property insurance written on a builder's risk "all-risks" completed value or equivalent policy form and sufficient to cover the total value of the entire Project on a replacement cost basis. The Owner's property insurance coverage shall be no less than the amount of the initial Contract Sum, plus the value of subsequent Modifications and labor performed and materials or equipment supplied by others. The property insurance shall be maintained until Substantial Completion and thereafter as provided in Section A.2.3.1.3, unless otherwise provided in the Contract Documents or otherwise agreed in writing by the parties to this Agreement. This insurance shall include the interests of the Owner, Contractor, Subcontractors, and Sub-subcontractors in the Project as insureds. This insurance shall include the interests of mortgagees as loss payees.

§ A.2.3.1.1 Causes of Loss. The insurance required by this Section A.2.3.1 shall provide coverage for direct physical loss or damage, and shall not exclude the risks of fire, explosion, theft, vandalism, malicious mischief, collapse, earthquake, flood, or windstorm. The insurance shall also provide coverage for ensuing loss or resulting damage from error, omission, or deficiency in construction methods, design, specifications, workmanship, or materials. Sub-limits, if any, are as follows:
(Indicate below the cause of loss and any applicable sub-limit.)

Causes of Loss	Sub-Limit

§ A.2.3.1.2 Specific Required Coverages. The insurance required by this Section A.2.3.1 shall provide coverage for loss or damage to falsework and other temporary structures, and to building systems from testing and startup. The insurance shall also cover debris removal, including demolition occasioned by enforcement of any applicable legal requirements, and reasonable compensation for the Architect's and Contractor's services and expenses required as a result of such insured loss, including claim preparation expenses. Sub-limits, if any, are as follows:
(Indicate below type of coverage and any applicable sub-limit for specific required coverages.)

Coverage	Sub-Limit

SAMPLE

§ A.2.3.1.3 Unless the parties agree otherwise, upon Substantial Completion, the Owner shall continue the insurance required by Section A.2.3.1 or, if necessary, replace the insurance policy required under Section A.2.3.1 with property insurance written for the total value of the Project that shall remain in effect until expiration of the period for correction of the Work set forth in Section 12.2.2 of the General Conditions.

§ A.2.3.1.4 Deductibles and Self-Insured Retentions. If the insurance required by this Section A.2.3 is subject to deductibles or self-insured retentions, the Owner shall be responsible for all loss not covered because of such deductibles or retentions.

§ A.2.3.2 Occupancy or Use Prior to Substantial Completion. The Owner's occupancy or use of any completed or partially completed portion of the Work prior to Substantial Completion shall not commence until the insurance company or companies providing the insurance under Section A.2.3.1 have consented in writing to the continuance of coverage. The Owner and the Contractor shall take no action with respect to partial occupancy or use that would cause cancellation, lapse, or reduction of insurance, unless they agree otherwise in writing.

§ A.2.3.3 Insurance for Existing Structures
If the Work involves remodeling an existing structure or constructing an addition to an existing structure, the Owner shall purchase and maintain, until the expiration of the period for correction of Work as set forth in Section 12.2.2 of the General Conditions, "all-risks" property insurance, on a replacement cost basis, protecting the existing structure against direct physical loss or damage from the causes of loss identified in Section A.2.3.1, notwithstanding the undertaking of the Work. The Owner shall be responsible for all co-insurance penalties.

§ A.2.4 Optional Extended Property Insurance.
The Owner shall purchase and maintain the insurance selected and described below.

AIA Document A101™ – 2017 Exhibit A. Copyright © 2017 by The American Institute of Architects. **All rights reserved. WARNING: This AIA® Document is protected by U.S. Copyright Law and International Treaties. Unauthorized reproduction or distribution of this AIA® Document, or any portion of it, may result in severe civil and criminal penalties, and will be prosecuted to the maximum extent possible under the law.** This document was produced by AIA software at 08:33:21 ET on 11/19/2018 under Order No.5013131753 which expires on 10/31/2019, and is not for resale.
User Notes: (1966621747)

(Select the types of insurance the Owner is required to purchase and maintain by placing an X in the box(es) next to the description(s) of selected insurance. For each type of insurance selected, indicate applicable limits of coverage or other conditions in the fill point below the selected item.)

[ ] **§ A.2.4.1 Loss of Use, Business Interruption, and Delay in Completion Insurance**, to reimburse the Owner for loss of use of the Owner's property, or the inability to conduct normal operations due to a covered cause of loss.

[ ] **§ A.2.4.2 Ordinance or Law Insurance**, for the reasonable and necessary costs to satisfy the minimum requirements of the enforcement of any law or ordinance regulating the demolition, construction, repair, replacement or use of the Project.

[ ] **§ A.2.4.3 Expediting Cost Insurance**, for the reasonable and necessary costs for the temporary repair of damage to insured property, and to expedite the permanent repair or replacement of the damaged property.

[ ] **§ A.2.4.4 Extra Expense Insurance**, to provide reimbursement of the reasonable and necessary excess costs incurred during the period of restoration or repair of the damaged property that are over and above the total costs that would normally have been incurred during the same period of time had no loss or damage occurred.

[ ] **§ A.2.4.5 Civil Authority Insurance**, for losses or costs arising from an order of a civil authority prohibiting access to the Project, provided such order is the direct result of physical damage covered under the required property insurance.

[ ] **§ A.2.4.6 Ingress/Egress Insurance**, for loss due to the necessary interruption of the insured's business due to physical prevention of ingress to, or egress from, the Project as a direct result of physical damage.

[ ] **§ A.2.4.7 Soft Costs Insurance**, to reimburse the Owner for costs due to the delay of completion of the Work, arising out of physical loss or damage covered by the required property insurance: including construction loan fees; leasing and marketing expenses; additional fees, including those of architects, engineers, consultants, attorneys and accountants, needed for the completion of the construction, repairs, or reconstruction; and carrying costs such as property taxes, building permits, additional interest on loans, realty taxes, and insurance premiums over and above normal expenses.

§ A.2.5 Other Optional Insurance.

The Owner shall purchase and maintain the insurance selected below.

(Select the types of insurance the Owner is required to purchase and maintain by placing an X in the box(es) next to the description(s) of selected insurance.)

[ ] **§ A.2.5.1 Cyber Security Insurance** for loss to the Owner due to data security and privacy breach,

SAMPLE

AIA Document A101™ – 2017 Exhibit A. Copyright © 2017 by The American Institute of Architects. **All rights reserved. WARNING: This AIA® Document is protected by U.S. Copyright Law and International Treaties. Unauthorized reproduction or distribution of this AIA® Document, or any portion of it, may result in severe civil and criminal penalties, and will be prosecuted to the maximum extent possible under the law.** This document was produced by AIA software at 08:33:21 ET on 11/19/2018 under Order No.5013131753 which expires on 10/31/2019, and is not for resale.
User Notes: (1966621747)

including costs of investigating a potential or actual breach of confidential or private information.
(Indicate applicable limits of coverage or other conditions in the fill point below.)

[ ] **§ A.2.5.2 Other Insurance**
(List below any other insurance coverage to be provided by the Owner and any applicable limits.)

Coverage	Limits

ARTICLE A.3 CONTRACTOR'S INSURANCE AND BONDS

§ A.3.1 General

§ A.3.1.1 Certificates of Insurance. The Contractor shall provide certificates of insurance acceptable to the Owner evidencing compliance with the requirements in this Article A.3 at the following times: (1) prior to commencement of the Work; (2) upon renewal or replacement of each required policy of insurance; and (3) upon the Owner's written request. An additional certificate evidencing continuation of commercial liability coverage, including coverage for completed operations, shall be submitted with the final Application for Payment and thereafter upon renewal or replacement of such coverage until the expiration of the periods required by Section A.3.2.1 and Section A.3.3.1. The certificates will show the Owner as an additional insured on the Contractor's Commercial General Liability and excess or umbrella liability policy or policies.

§ A.3.1.2 Deductibles and Self-Insured Retentions. The Contractor shall disclose to the Owner any deductible or self-insured retentions applicable to any insurance required to be provided by the Contractor.

§ A.3.1.3 Additional Insured Obligations. To the fullest extent permitted by law, the Contractor shall cause the commercial general liability coverage to include (1) the Owner, the Architect, and the Architect's consultants as additional insureds for claims caused in whole or in part by the Contractor's negligent acts or omissions during the Contractor's operations; and (2) the Owner as an additional insured for claims caused in whole or in part by the Contractor's negligent acts or omissions for which loss occurs during completed operations. The additional insured coverage shall be primary and non-contributory to any of the Owner's general liability insurance policies and shall apply to both ongoing and completed operations. To the extent commercially available, the additional insured coverage shall be no less than that provided by Insurance Services Office, Inc. (ISO) forms CG 20 10 07 04, CG 20 37 07 04, and, with respect to the Architect and the Architect's consultants, CG 20 32 07 04.

§ A.3.2 Contractor's Required Insurance Coverage

§ A.3.2.1 The Contractor shall purchase and maintain the following types and limits of insurance from an insurance company or insurance companies lawfully authorized to issue insurance in the jurisdiction where the Project is located. The Contractor shall maintain the required insurance until the expiration of the period for correction of Work as set forth in Section 12.2.2 of the General Conditions, unless a different duration is stated below:
(If the Contractor is required to maintain insurance for a duration other than the expiration of the period for correction of Work, state the duration.)

§ A.3.2.2 Commercial General Liability

§ A.3.2.2.1 Commercial General Liability insurance for the Project written on an occurrence form with policy limits of not less than ($) each occurrence, ($) general aggregate, and ($) aggregate for products-completed operations hazard, providing coverage for claims including

- **.1** damages because of bodily injury, sickness or disease, including occupational sickness or disease, and death of any person;
- **.2** personal injury and advertising injury;
- **.3** damages because of physical damage to or destruction of tangible property, including the loss of use of such property;
- **.4** bodily injury or property damage arising out of completed operations; and
- **.5** the Contractor's indemnity obligations under Section 3.18 of the General Conditions.

SAMPLE

AIA Document A101™ – 2017 Exhibit A. Copyright © 2017 by The American Institute of Architects. **All rights reserved. WARNING: This AIA® Document is protected by U.S. Copyright Law and International Treaties. Unauthorized reproduction or distribution of this AIA® Document, or any portion of it, may result in severe civil and criminal penalties, and will be prosecuted to the maximum extent possible under the law.** This document was produced by AIA software at 08:33:21 ET on 11/19/2018 under Order No.5013131753 which expires on 10/31/2019, and is not for resale.
User Notes: (1966621747)

§ A.3.2.2.2 The Contractor's Commercial General Liability policy under this Section A.3.2.2 shall not contain an exclusion or restriction of coverage for the following:

- **.1** Claims by one insured against another insured, if the exclusion or restriction is based solely on the fact that the claimant is an insured, and there would otherwise be coverage for the claim.
- **.2** Claims for property damage to the Contractor's Work arising out of the products-completed operations hazard where the damaged Work or the Work out of which the damage arises was performed by a Subcontractor.
- **.3** Claims for bodily injury other than to employees of the insured.
- **.4** Claims for indemnity under Section 3.18 of the General Conditions arising out of injury to employees of the insured.
- **.5** Claims or loss excluded under a prior work endorsement or other similar exclusionary language.
- **.6** Claims or loss due to physical damage under a prior injury endorsement or similar exclusionary language.
- **.7** Claims related to residential, multi-family, or other habitational projects, if the Work is to be performed on such a project.
- **.8** Claims related to roofing, if the Work involves roofing.
- **.9** Claims related to exterior insulation finish systems (EIFS), synthetic stucco or similar exterior coatings or surfaces, if the Work involves such coatings or surfaces.
- **.10** Claims related to earth subsidence or movement, where the Work involves such hazards.
- **.11** Claims related to explosion, collapse and underground hazards, where the Work involves such hazards.

§ A.3.2.3 Automobile Liability covering vehicles owned, and non-owned vehicles used, by the Contractor, with policy limits of not less than ($) per accident, for bodily injury, death of any person, and property damage arising out of the ownership, maintenance and use of those motor vehicles along with any other statutorily required automobile coverage.

§ A.3.2.4 The Contractor may achieve the required limits and coverage for Commercial General Liability and Automobile Liability through a combination of primary and excess or umbrella liability insurance, provided such primary and excess or umbrella insurance policies result in the same or greater coverage as the coverages required under Section A.3.2.2 and A.3.2.3, and in no event shall any excess or umbrella liability insurance provide narrower coverage than the primary policy. The excess policy shall not require the exhaustion of the underlying limits only through the actual payment by the underlying insurers.

§ A.3.2.5 Workers' Compensation at statutory limits.

§ A.3.2.6 Employers' Liability with policy limits not less than ($) each accident, ($) each employee, and ($) policy limit.

§ A.3.2.7 Jones Act, and the Longshore & Harbor Workers' Compensation Act, as required, if the Work involves hazards arising from work on or near navigable waterways, including vessels and docks

§ A.3.2.8 If the Contractor is required to furnish professional services as part of the Work, the Contractor shall procure Professional Liability insurance covering performance of the professional services, with policy limits of not less than ($) per claim and ($) in the aggregate.

§ A.3.2.9 If the Work involves the transport, dissemination, use, or release of pollutants, the Contractor shall procure Pollution Liability insurance, with policy limits of not less than ($) per claim and ($) in the aggregate.

§ A.3.2.10 Coverage under Sections A.3.2.8 and A.3.2.9 may be procured through a Combined Professional Liability and Pollution Liability insurance policy, with combined policy limits of not less than ($) per claim and ($) in the aggregate.

§ A.3.2.11 Insurance for maritime liability risks associated with the operation of a vessel, if the Work requires such activities, with policy limits of not less than ($) per claim and ($) in the aggregate.

SAMPLE

AIA Document A101™ – 2017 Exhibit A. Copyright © 2017 by The American Institute of Architects. **All rights reserved. WARNING: This AIA® Document is protected by U.S. Copyright Law and International Treaties. Unauthorized reproduction or distribution of this AIA® Document, or any portion of it, may result in severe civil and criminal penalties, and will be prosecuted to the maximum extent possible under the law.** This document was produced by AIA software at 08:33:21 ET on 11/19/2018 under Order No.5013131753 which expires on 10/31/2019, and is not for resale.
User Notes: (1966621747)

§ A.3.2.12 Insurance for the use or operation of manned or unmanned aircraft, if the Work requires such activities, with policy limits of not less than ($) per claim and ($) in the aggregate.

§ A.3.3 Contractor's Other Insurance Coverage

§ A.3.3.1 Insurance selected and described in this Section A.3.3 shall be purchased from an insurance company or insurance companies lawfully authorized to issue insurance in the jurisdiction where the Project is located. The Contractor shall maintain the required insurance until the expiration of the period for correction of Work as set forth in Section 12.2.2 of the General Conditions, unless a different duration is stated below:

(If the Contractor is required to maintain any of the types of insurance selected below for a duration other than the expiration of the period for correction of Work, state the duration.)

§ A.3.3.2 The Contractor shall purchase and maintain the following types and limits of insurance in accordance with Section A.3.3.1.

(Select the types of insurance the Contractor is required to purchase and maintain by placing an X in the box(es) next to the description(s) of selected insurance. Where policy limits are provided, include the policy limit in the appropriate fill point.)

[ ] **§ A.3.3.2.1** Property insurance of the same type and scope satisfying the requirements identified in Section A.2.3, which, if selected in this section A.3.3.2.1, relieves the Owner of the responsibility to purchase and maintain such insurance except insurance required by Section A.2.3.1.3 and Section A.2.3.3. The Contractor shall comply with all obligations of the Owner under Section A.2.3 except to the extent provided below. The Contractor shall disclose to the Owner the amount of any deductible, and the Owner shall be responsible for losses within the deductible. Upon request, the Contractor shall provide the Owner with a copy of the property insurance policy or policies required. The Owner shall adjust and settle the loss with the insurer and be the trustee of the proceeds of the property insurance in accordance with Article 11 of the General Conditions unless otherwise set forth below:
(Where the Contractor's obligation to provide property insurance differs from the Owner's obligations as described under Section A.2.3, indicate such differences in the space below. Additionally, if a party other than the Owner will be responsible for adjusting and settling a loss with the insurer and acting as the trustee of the proceeds of property insurance in accordance with Article 11 of the General Conditions, indicate the responsible party below.)

[ ] **§ A.3.3.2.2 Railroad Protective Liability Insurance**, with policy limits of not less than ($) per claim and ($) in the aggregate, for Work within fifty (50) feet of railroad property.

[ ] **§ A.3.3.2.3 Asbestos Abatement Liability Insurance**, with policy limits of not less than ($) per claim and ($) in the aggregate, for liability arising from the encapsulation, removal, handling, storage, transportation, and disposal of asbestos-containing materials.

[ ] **§ A.3.3.2.4** Insurance for physical damage to property while it is in storage and in transit to the construction site on an "all-risks" completed value form.

[ ] **§ A.3.3.2.5** Property insurance on an "all-risks" completed value form, covering property owned by the Contractor and used on the Project, including scaffolding and other equipment.

[ ] **§ A.3.3.2.6 Other Insurance**
(List below any other insurance coverage to be provided by the Contractor and any applicable limits.)

Coverage	Limits

SAMPLE

AIA Document A101™ – 2017 Exhibit A. Copyright © 2017 by The American Institute of Architects. **All rights reserved. WARNING: This AIA® Document is protected by U.S. Copyright Law and International Treaties. Unauthorized reproduction or distribution of this AIA® Document, or any portion of it, may result in severe civil and criminal penalties, and will be prosecuted to the maximum extent possible under the law.** This document was produced by AIA software at 08:33:21 ET on 11/19/2018 under Order No.5013131753 which expires on 10/31/2019, and is not for resale.
User Notes: (1966621747)

§ A.3.4 Performance Bond and Payment Bond

The Contractor shall provide surety bonds, from a company or companies lawfully authorized to issue surety bonds in the jurisdiction where the Project is located, as follows:
(Specify type and penal sum of bonds.)

Type	Penal Sum ($0.00)
Payment Bond	
Performance Bond	

Payment and Performance Bonds shall be AIA Document A312™, Payment Bond and Performance Bond, or contain provisions identical to AIA Document A312™, current as of the date of this Agreement.

ARTICLE A.4 SPECIAL TERMS AND CONDITIONS

Special terms and conditions that modify this Insurance and Bonds Exhibit, if any, are as follows:

SAMPLE

AIA Document A101™ – 2017 Exhibit A. Copyright © 2017 by The American Institute of Architects. **All rights reserved. WARNING: This AIA® Document is protected by U.S. Copyright Law and International Treaties. Unauthorized reproduction or distribution of this AIA® Document, or any portion of it, may result in severe civil and criminal penalties, and will be prosecuted to the maximum extent possible under the law.** This document was produced by AIA software at 08:33:21 ET on 11/19/2018 under Order No.5013131753 which expires on 10/31/2019, and is not for resale.
User Notes: (1966621747)

SECTION 00 54 13

SUPPLEMENT TO AGREEMENT BETWEEN OWNER AND CONTRACTOR A101-2017

The following supplements modify the "Standard Form of Agreement Between Owner and Contractor," AIA Document A101-2017. Where a portion of the Standard Form of Agreement is modified or deleted by the following, the unaltered portions of the Standard Form of Agreement shall remain in effect.

ARTICLE 3: DATE OF COMMENCEMENT AND SUBSTANTIAL COMPLETION

3.1 Delete paragraph 3.1 in its entirety and replace with the following:

"The date of Commencement of the Work shall be a date set forth in a notice to proceed issued by the Owner."

ARTICLE 5: PAYMENTS

5.1 PROGRESS PAYMENTS

5.1.3 Delete paragraph 5.1.3 in its entirety and replace with the following:

"Provided that a valid Application for Payment is received by the Architect that meets all requirements of the Contract, payment shall be made by the Owner not later than 30 days after the Owner receives the valid Application for Payment."

5.3 Insert the interest rate of "1% per month not to exceed 12% per annum."

ARTICLE 6: DISPUTE RESOLUTION

6.2 BINDING DISPUTE RESOLUTION

Check the box "Other" – and add the following sentence:

"Any remedies available in law or in equity."

ARTICLE 7: TERMINATION or SUSPENSION

7.1.1.1 Delete paragraph 7.1.1.1 in its entirety.

ARTICLE 8: MISCELLANEOUS PROVISIONS

8.4 Delete paragraph 8.4 in its entirety and replace with the following:

"The Contractor's representative shall not be changed without ten days written notice to the Owner."

END OF SECTION

This page intentionally left blank.

SECTION 00 54 14

SUPPLEMENT TO A101-2017 – EXHIBIT A - INSURANCE & BONDS

The following supplements modify the "Standard Form of Agreement Between Owner and Contractor," AIA Document A101-2017 Exhibit A Insurance and Bonds. Where a portion of the Standard Form of Agreement is modified or deleted by the following, the unaltered portions of the Standard Form of Agreement shall remain in effect.

ARTICLE A.2 OWNER'S INSURANCE

A.2.1 General

Delete paragraph A.2.1 in its entirety.

A.2.2 Liability Insurance

Delete paragraph A.2.2 in its entirety, except in the case of school projects this paragraph shall remain.

A.2.3 Required Property Insurance

Delete paragraph A.2.3 in its entirety.

A.2.4 Optional Extended Property Insurance

Delete paragraph A.2.4 in its entirety.

A.2.5 Other Optional Insurance

Delete paragraph A.2.5 in its entirety.

ARTICLE A.3 CONTRACTORS INSURANCE AND BONDS

A.3.1.1 Strike the last sentence of the paragraph.

A.3.1.3 Additional Insured Obligations

In the first sentence after "coverage to include (1)" delete "(1) the Owner,".

Strike the remainder of the first sentence beginning at the semicolon "; and (2) the Owner" through the end of the sentence.

Delete the second sentence in its entirety.

A.3.2.2.1 Insert "$1,000,000.00" in the blank for each occurrence.

Insert "$3,000,000.00" in the blank for general aggregate.
Insert "$3,000,000.00" in the blank for aggregate for products-completed operations hazard.

A.3.2.3 Insert "$1,000,000.00" in the blank for per accident.

A.3.2.6 Insert "$500,000.00" in the blank for each accident.
Insert "$500,000.00" in the blank for each employee.
Insert "$500,000.00" in the blank for policy limit.

A.3.2.8 Insert "$1,000,000.00" in the blank for per claim.
Insert "$3,000,000.00" in the blank for in the aggregate.

A.3.2.9 Insert "$1,000,000.00" in the blank for per claim.
Insert "$3,000,000.00" in the blank for in the aggregate.

A.3.2.10 Insert "$2,000,000.00" in the blank for per claim.
Insert "$4,000,000.00" in the blank for in the aggregate.

A.3.2.11 Strike in its entirety.

A.3.2.12 Strike in its entirety.

A.3.3.2.1 Delete paragraph 3.3.2.1 in its entirety

A.3.3.2.2 Strike in its entirety.

A.3.3.2.3 Insert "$1,000,000.00" in the blanks for per claim.
Insert "$3,000,000.00" in the blanks for in the aggregate.

A.3.4 Insert the actual contract price in both the Payment Bond and the Performance Bond Penal Sum blanks. It must be 100% of the contract price.

Strike the last sentence in this section and replace with "Payment and Performance Bonds shall be in the standard form issued by the Delaware Office of Management and Budget."

END OF SECTION

STATE OF DELAWARE
OFFICE OF MANAGEMENT AND BUDGET

PERFORMANCE BOND

Bond Number: _____

KNOW ALL PERSONS BY THESE PRESENTS, that we, _____, as principal ("**Principal**"), and _____, a _____ corporation, legally authorized to do business in the State of Delaware, as surety ("**Surety**"), are held and firmly bound unto the Office of Management and Budget, Division of Facilities Management ("**Owner**") (***insert State agency name***), in the amount of _____ ($_____), to be paid to **Owner**, for which payment well and truly to be made, we do bind ourselves, our and each and every of our heirs, executors, administrations, successors and assigns, jointly and severally, for and in the whole, firmly by these presents.

Sealed with our seals and dated this _____ day of _____, 20__.

NOW THE CONDITION OF THIS OBLIGATION IS SUCH, that if **Principal**, who has been awarded by **Owner** that certain contract known as Contract No. MC3512000045A dated the _____ day of _____, 20__ (the "Contract"), which Contract is incorporated herein by reference, shall well and truly provide and furnish all materials, appliances and tools and perform all the work required under and pursuant to the terms and conditions of the Contract and the Contract Documents (as defined in the Contract) or any changes or modifications thereto made as therein provided, shall make good and reimburse **Owner** sufficient funds to pay the costs of completing the Contract that **Owner** may sustain by reason of any failure or default on the part of **Principal**, and shall also indemnify and save harmless **Owner** from all costs, damages and expenses arising out of or by reason of the performance of the Contract and for as long as provided by the Contract; then this obligation shall be void, otherwise to be and remain in full force and effect.

Surety, for value received, hereby stipulates and agrees, if requested to do so by **Owner**, to fully perform and complete the work to be performed under the Contract pursuant to the terms, conditions and covenants thereof, if for any cause **Principal** fails or neglects to so fully perform and complete such work.

Surety, for value received, for itself and its successors and assigns, hereby stipulates and agrees that the obligation of **Surety** and its bond shall be in no way impaired or affected by any extension of time, modification, omission, addition or change in or to the Contract or the work to be performed thereunder, or by any payment thereunder before the time required therein, or by any waiver of any provisions thereof, or by any assignment, subletting or other transfer thereof or of any work to be performed or any monies due or to become due thereunder; and **Surety** hereby waives notice of any and all such extensions, modifications, omissions, additions, changes, payments, waivers, assignments, subcontracts and transfers and hereby expressly stipulates and agrees that any and all things done and omitted to be done by and in relation to assignees, subcontractors, and other transferees shall have the same effect as to **Surety** as though done or omitted to be done by or in relation to **Principal**.

Surety hereby stipulates and agrees that no modifications, omissions or additions in or to the terms of the Contract shall in any way whatsoever affect the obligation of **Surety** and its bond.

Any proceeding, legal or equitable, under this Bond may be brought in any court of competent jurisdiction in the State of Delaware. Notices to **Surety** or Contractor may be mailed or delivered to them at their respective addresses shown below.

IN WITNESS WHEREOF, **Principal** and **Surety** have hereunto set their hand and seals, and such of them as are corporations have caused their corporate seal to be hereto affixed and these presents to be signed by their duly authorized officers, the day and year first above written.

PRINCIPAL

Name: _____

Witness or Attest:

Address: _____

_____
Name:

By: _____(SEAL)
Name:
Title:

(Corporate Seal)

SURETY

Name: _____

Witness or Attest:

Address: _____

_____
Name:

By: _____ (SEAL)
Name:
Title:

(Corporate Seal)

STATE OF DELAWARE
OFFICE OF MANAGEMENT AND BUDGET

PAYMENT BOND

Bond Number: _____

KNOW ALL PERSONS BY THESE PRESENTS, that we, _____, as principal ("**Principal**"), and _____, a _____ corporation, legally authorized to do business in the State of Delaware, as surety ("**Surety**"), are held and firmly bound unto the Office of Management and Budget, Division of Facilities Management ("**Owner**") (***insert State agency name***), in the amount of _____ ($_____), to be paid to **Owner**, for which payment well and truly to be made, we do bind ourselves, our and each and every of our heirs, executors, administrations, successors and assigns, jointly and severally, for and in the whole firmly by these presents.

Sealed with our seals and dated this _____ day of_____, 20__.

NOW THE CONDITION OF THIS OBLIGATION IS SUCH, that if **Principal**, who has been awarded by **Owner** that certain contract known as Contract No. MC6512000045A dated the _____ day of _____, 20__ (the "Contract"), which Contract is incorporated herein by reference, shall well and truly pay all and every person furnishing materials or performing labor or service in and about the performance of the work under the Contract, all and every sums of money due him, her, them or any of them, for all such materials, labor and service for which **Principal** is liable, shall make good and reimburse **Owner** sufficient funds to pay such costs in the completion of the Contract as **Owner** may sustain by reason of any failure or default on the part of **Principal**, and shall also indemnify and save harmless **Owner** from all costs, damages and expenses arising out of or by reason of the performance of the Contract and for as long as provided by the Contract; then this obligation shall be void, otherwise to be and remain in full force and effect.

Surety, for value received, for itself and its successors and assigns, hereby stipulates and agrees that the obligation of **Surety** and its bond shall be in no way impaired or affected by any extension of time, modification, omission, addition or change in or to the Contract or the work to be performed thereunder, or by any payment thereunder before the time required therein, or by any waiver of any provisions thereof, or by any assignment, subletting or other transfer thereof or of any work to be performed or any monies due or to become due thereunder; and **Surety** hereby waives notice of any and all such extensions, modifications, omissions, additions, changes, payments, waivers, assignments, subcontracts and transfers and hereby expressly stipulates and agrees that any and all things done and omitted to be done by and in relation to assignees, subcontractors, and other transferees shall have the same effect as to **Surety** as though done or omitted to be done by or in relation to **Principal**.

Surety hereby stipulates and agrees that no modifications, omission or additions in or to the terms of the Contract shall in any way whatsoever affect the obligation of **Surety** and its bond.

Any proceeding, legal or equitable, under this Bond may be brought in any court of competent jurisdiction in the State of Delaware. Notices to **Surety** or Contractor may be mailed or delivered to them at their respective addresses shown below.

IN WITNESS WHEREOF, **Principal** and **Surety** have hereunto set their hand and seals, and such of them as are corporations have caused their corporate seal to be hereto affixed and these presents to be signed by their duly authorized officers, the day and year first above written.

PRINCIPAL

Name: _____

Witness or Attest:

Address: _____

_____

By: _____(SEAL)

Name:

Name:

Title:

(Corporate Seal)

SURETY

Name: _____

Witness or Attest:

Address: _____

_____

By: _____(SEAL)

Name:

Name:

Title:

(Corporate Seal)

SECTION 00 62 76

APPLICATION AND CERTIFICATE FOR PAYMENT FORMS

The Application and Certificate for Payment Forms (AIA G702 & G703) are part of this project manual as included herein.

This page intentionally left blank.

AIA® Document G702™ – 1992

Application and Certificate for Payment

TO OWNER:

PROJECT:

APPLICATION NO: 001
PERIOD TO:
CONTRACT FOR: General Construction
CONTRACT DATE:
PROJECT NOS: / /

Distribution to:
OWNER: X
ARCHITECT: X
CONTRACTOR: X
FIELD:
OTHER:

FROM
CONTRACTOR:

VIA
ARCHITECT:

SAMPLE

CONTRACTOR'S APPLICATION FOR PAYMENT

Application is made for payment, as shown below, in connection with the Contract.
Continuation Sheet, AIA Document G703, is attached.

1. ORIGINAL CONTRACT SUM ..... $ 0.00
2. NET CHANGE BY CHANGE ORDERS ..... $ 0.00
3. CONTRACT SUM TO DATE (Line 1 ± 2) ..... $ 0.00
4. TOTAL COMPLETED & STORED TO DATE (Column G on G703) ..... $ 0.00
5. RETAINAGE:
   a. 0 % of Completed Work
      (Column D + E on G703) $ 0.00
   b. 0 % of Stored Material
      (Column F on G703) $ 0.00

   Total Retainage (Lines 5a + 5b or Total in Column I of G703) ..... $ 0.00
6. TOTAL EARNED LESS RETAINAGE ..... $ 0.00
   (Line 4 Less Line 5 Total)
7. LESS PREVIOUS CERTIFICATES FOR PAYMENT ..... $ 0.00
   (Line 6 from prior Certificate)
8. CURRENT PAYMENT DUE ..... $ 0.00
9. BALANCE TO FINISH, INCLUDING RETAINAGE
   (Line 3 less Line 6) $ 0.00

CHANGE ORDER SUMMARY	ADDITIONS	DEDUCTIONS
Total changes approved in previous months by Owner	$ 0.00	$ 0.00
Total approved this Month	$ 0.00	$ 0.00
TOTALS	$ 0.00	$ 0.00
NET CHANGES by Change Order	$ 0.00	

The undersigned Contractor certifies that to the best of the Contractor's knowledge, information and belief the Work covered by this Application for Payment has been completed in accordance with the Contract Documents, that all amounts have been paid by the Contractor for Work for which previous Certificates for Payment were issued and payments received from the Owner, and that current payment shown herein is now due.

CONTRACTOR:

By: _____ Date: _____

State of:

County of:

Subscribed and sworn to before me this day of

Notary Public:
My Commission expires:

ARCHITECT'S CERTIFICATE FOR PAYMENT

In accordance with the Contract Documents, based on on-site observations and the data comprising this application, the Architect certifies to the Owner that to the best of the Architect's knowledge, information and belief the Work has progressed as indicated, the quality of the Work is in accordance with the Contract Documents, and the Contractor is entitled to payment of the AMOUNT CERTIFIED.

AMOUNT CERTIFIED ..... $ 0.00

(Attach explanation if amount certified differs from the amount applied. Initial all figures on this Application and on the Continuation Sheet that are changed to conform with the amount certified.)

ARCHITECT:

By: _____ Date: _____

This Certificate is not negotiable. The AMOUNT CERTIFIED is payable only to the Contractor named herein. Issuance, payment and acceptance of payment are without prejudice to any rights of the Owner or Contractor under this Contract.

AIA Document G702™ – 1992. Copyright © 1953, 1963, 1965, 1971, 1978, 1983 and 1992 by The American Institute of Architects. **All rights reserved. WARNING: This AIA® Document is protected by U.S. Copyright Law and International Treaties. Unauthorized reproduction or distribution of this AIA® Document, or any portion of it, may result in severe civil and criminal penalties, and will be prosecuted to the maximum extent possible under the law.** This document was produced by AIA software at 16:37:41 on 04/05/2017 under Order No.0995397060_1 which expires on 11/12/2017, and is not for resale.
User Notes: (1264080171)

This page intentionally left blank.

AIA® Document G703™ – 1992

Continuation Sheet

AIA Document, G702™–1992, Application and Certification for Payment, or G736™–2009, Project Application and Project Certificate for Payment, Construction Manager as Adviser Edition, containing Contractor's signed certification is attached.
In tabulations below, amounts are in US dollars.
Use Column I on Contracts where variable retainage for line items may apply.

APPLICATION NO: 001
APPLICATION DATE:
PERIOD TO:
ARCHITECT'S PROJECT NO:

A	B	C	D	E	F	G		H	I
			WORK COMPLETED						
ITEM NO.	DESCRIPTION OF WORK	SCHEDULED VALUE	FROM PREVIOUS APPLICATION (D + E)	THIS PERIOD	MATERIALS PRESENTLY STORED (NOT IN D OR E)	TOTAL COMPLETED AND STORED TO DATE (D+E+F)	% (G ÷ C)	BALANCE TO FINISH (C - G)	RETAINAGE (IF VARIABLE RATE)
		0.00	0.00	0.00	0.00	0.00	0.00 %	0.00	0.00
		0.00	0.00	0.00	0.00	0.00	0.00 %	0.00	0.00
		0.00	0.00	0.00	0.00	0.00	0.00 %	0.00	0.00
		0.00	0.00	0.00	0.00	0.00	0.00 %	0.00	0.00
		0.00	0.00	0.00	0.00	0.00	0.00 %	0.00	0.00
		0.00	0.00	0.00	0.00	0.00	0.00 %	0.00	0.00
		0.00	0.00	0.00	0.00	0.00	0.00 %	0.00	0.00
		0.00	0.00	0.00	0.00	0.00	0.00 %	0.00	0.00
		0.00	0.00	0.00	0.00	0.00	0.00 %	0.00	0.00
		0.00	0.00	0.00	0.00	0.00	0.00 %	0.00	0.00
		0.00	0.00	0.00	0.00	0.00	0.00 %	0.00	0.00
		0.00	0.00	0.00	0.00	0.00	0.00 %	0.00	0.00
		0.00	0.00	0.00	0.00	0.00	0.00 %	0.00	0.00
		0.00	0.00	0.00	0.00	0.00	0.00 %	0.00	0.00
		0.00	0.00	0.00	0.00	0.00	0.00 %	0.00	0.00
		0.00	0.00	0.00	0.00	0.00	0.00 %	0.00	0.00
		0.00	0.00	0.00	0.00	0.00	0.00 %	0.00	0.00
		0.00	0.00	0.00	0.00	0.00	0.00 %	0.00	0.00
		0.00	0.00	0.00	0.00	0.00	0.00 %	0.00	0.00
	GRAND TOTAL	$0.00	$0.00	$0.00	$0.00	$0.00	0.00 %	$0.00	$0.00

SAMPLE

AIA Document G703™ – 1992. Copyright © 1963, 1965, 1966, 1967,1970, 1978, 1983 and 1992 by The American Institute of Architects. **All rights reserved. WARNING: This AIA® Document is protected by U.S. Copyright Law and International Treaties. Unauthorized reproduction or distribution of this AIA® Document, or any portion of it, may result in severe civil and criminal penalties, and will be prosecuted to the maximum extent possible under the law.** This document was produced by AIA software at 16:40:58 on 04/05/2017 under Order No.0995397060_1 which expires on 11/12/2017, and is not for resale.
User Notes: (1817868131)

This page intentionally left blank.

ALLOWANCE ACCESS AUTHORIZATION:

Project: Northeast State Service Center Reimagining Project MC#3512000045

Architect: Davis, Bowen & Friedel, Inc. **Project No.** 0586B045.N01

Contractor: _____

AAA No.: _____ **Initiation Date:** _____

The Allowance is allocated as follows:

This page intentionally left blank.

Total original Contract Allowance was:	$_____
Amount of Contract Allowance Access previously authorized:	$_____
Adjusted Contract Allowance prior to this authorization is:	$_____
The amount of available Allowance will Decrease by this Access Authorization:	$_____
The remaining Contract Allowance, after this Access Authorization will be:	$_____

Recommended by:
Architect

By (Signature): _____

Date: _____

Accepted by:
Contractor

By (Signature): _____

Date: _____

Approved by:
Owner

By (Signature): _____

Date: _____

This page intentionally left blank.

SECTION 00 72 13

GENERAL CONDITIONS OF THE CONTRACT FOR CONSTRUCTION
A201 - 2017

The General Conditions of this Contract are as stated in the American Institute of Architects Document AIA A201 (2017 Edition) entitled General Conditions of the Contract for Construction as revised by the Supplementary General Conditions and is part of this project manual as if herein written in full.

This page intentionally left blank.

AIA® Document A201™ – 2017

General Conditions of the Contract for Construction

for the following PROJECT:
(Name and location or address)

THE OWNER:
(Name, legal status and address)

THE ARCHITECT:
(Name, legal status and address)

ADDITIONS AND DELETIONS:
The author of this document has added information needed for its completion. The author may also have revised the text of the original AIA standard form. An *Additions and Deletions Report* that notes added information as well as revisions to the standard form text is available from the author and should be reviewed. A vertical line in the left margin of this document indicates where the author has added necessary information and where the author has added to or deleted from the original AIA text.

This document has important legal consequences. Consultation with an attorney is encouraged with respect to its completion or modification.

For guidance in modifying this document to include supplementary conditions, see AIA Document A503™, Guide for Supplementary Conditions.

SAMPLE

TABLE OF ARTICLES

1 GENERAL PROVISIONS

2 OWNER

3 CONTRACTOR

4 ARCHITECT

5 SUBCONTRACTORS

6 CONSTRUCTION BY OWNER OR BY SEPARATE CONTRACTORS

7 CHANGES IN THE WORK

8 TIME

9 PAYMENTS AND COMPLETION

10 PROTECTION OF PERSONS AND PROPERTY

11 INSURANCE AND BONDS

12 UNCOVERING AND CORRECTION OF WORK

13 MISCELLANEOUS PROVISIONS

14 TERMINATION OR SUSPENSION OF THE CONTRACT

15 CLAIMS AND DISPUTES

Init.

/

AIA Document A201™ – 2017. Copyright © 1911, 1915, 1918, 1925, 1937, 1951, 1958, 1961, 1963, 1966, 1970, 1976, 1987, 1997, 2007 and 2017 by The American Institute of Architects. **All rights reserved. WARNING: This AIA® Document is protected by U.S. Copyright Law and International Treaties. Unauthorized reproduction or distribution of this AIA® Document, or any portion of it, may result in severe civil and criminal penalties, and will be prosecuted to the maximum extent possible under the law.** This document was produced by AIA software at 08:34:20 ET on 11/19/2018 under Order No.5013131753 which expires on 10/31/2019, and is not for resale.
User Notes: (1799450219)

INDEX

(Topics and numbers in bold are Section headings.)

Acceptance of Nonconforming Work
9.6.6, 9.9.3, **12.3**
Acceptance of Work
9.6.6, 9.8.2, 9.9.3, 9.10.1, 9.10.3, 12.3
Access to Work
3.16, 6.2.1, 12.1
Accident Prevention
10
Acts and Omissions
3.2, 3.3.2, 3.12.8, 3.18, 4.2.3, 8.3.1, 9.5.1, 10.2.5, 10.2.8, 13.3.2, 14.1, 15.1.2, 15.2
Addenda
1.1.1
Additional Costs, Claims for
3.7.4, 3.7.5, 10.3.2, 15.1.5
Additional Inspections and Testing
9.4.2, 9.8.3, 12.2.1, **13.4**
Additional Time, Claims for
3.2.4, 3.7.4, 3.7.5, 3.10.2, 8.3.2, **15.1.6**
Administration of the Contract
3.1.3, **4.2**, 9.4, 9.5
Advertisement or Invitation to Bid
1.1.1
Aesthetic Effect
4.2.13
Allowances
3.8
Applications for Payment
4.2.5, 7.3.9, 9.2, **9.3**, 9.4, 9.5.1, 9.5.4, 9.6.3, 9.7, 9.10
Approvals
2.1.1, 2.3.1, 2.5, 3.1.3, 3.10.2, 3.12.8, 3.12.9, 3.12.10.1, 4.2.7, 9.3.2, 13.4.1
Arbitration
8.3.1, 15.3.2, **15.4**
ARCHITECT
4
Architect, Definition of
4.1.1
Architect, Extent of Authority
2.5, 3.12.7, 4.1.2, 4.2, 5.2, 6.3, 7.1.2, 7.3.4, 7.4, 9.2, 9.3.1, 9.4, 9.5, 9.6.3, 9.8, 9.10.1, 9.10.3, 12.1, 12.2.1, 13.4.1, 13.4.2, 14.2.2, 14.2.4, 15.1.4, 15.2.1
Architect, Limitations of Authority and Responsibility
2.1.1, 3.12.4, 3.12.8, 3.12.10, 4.1.2, 4.2.1, 4.2.2, 4.2.3, 4.2.6, 4.2.7, 4.2.10, 4.2.12, 4.2.13, 5.2.1, 7.4, 9.4.2, 9.5.4, 9.6.4, 15.1.4, 15.2
Architect's Additional Services and Expenses
2.5, 12.2.1, 13.4.2, 13.4.3, 14.2.4
Architect's Administration of the Contract
3.1.3, 3.7.4, 15.2, 9.4.1, 9.5
Architect's Approvals
2.5, 3.1.3, 3.5, 3.10.2, 4.2.7
Architect's Authority to Reject Work
3.5, 4.2.6, 12.1.2, 12.2.1
Architect's Copyright
1.1.7, 1.5
Architect's Decisions
3.7.4, 4.2.6, 4.2.7, 4.2.11, 4.2.12, 4.2.13, 4.2.14, 6.3, 7.3.4, 7.3.9, 8.1.3, 8.3.1, 9.2, 9.4.1, 9.5, 9.8.4, 9.9.1, 13.4.2, 15.2
Architect's Inspections
3.7.4, 4.2.2, 4.2.9, 9.4.2, 9.8.3, 9.9.2, 9.10.1, 13.4
Architect's Instructions
3.2.4, 3.3.1, 4.2.6, 4.2.7, 13.4.2
Architect's Interpretations
4.2.11, 4.2.12
Architect's Project Representative
4.2.10
Architect's Relationship with Contractor
1.1.2, 1.5, 2.3.3, 3.1.3, 3.2.2, 3.2.3, 3.2.4, 3.3.1, 3.4.2, 3.5, 3.7.4, 3.7.5, 3.9.2, 3.9.3, 3.10, 3.11, 3.12, 3.16, 3.18, 4.1.2, 4.2, 5.2, 6.2.2, 7, 8.3.1, 9.2, 9.3, 9.4, 9.5, 9.7, 9.8, 9.9, 10.2.6, 10.3, 11.3, 12, 13.3.2, 13.4, 15.2
Architect's Relationship with Subcontractors
1.1.2, 4.2.3, 4.2.4, 4.2.6, 9.6.3, 9.6.4, 11.3
Architect's Representations
9.4.2, 9.5.1, 9.10.1
Architect's Site Visits
3.7.4, 4.2.2, 4.2.9, 9.4.2, 9.5.1, 9.9.2, 9.10.1, 13.4
Asbestos
10.3.1
Attorneys' Fees
3.18.1, 9.6.8, 9.10.2, 10.3.3
Award of Separate Contracts
6.1.1, 6.1.2
Award of Subcontracts and Other Contracts for Portions of the Work
5.2
Basic Definitions
1.1
Bidding Requirements
1.1.1
Binding Dispute Resolution
8.3.1, 9.7, 11.5, 13.1, 15.1.2, 15.1.3, 15.2.1, 15.2.5, 15.2.6.1, 15.3.1, 15.3.2, 15.3.3, 15.4.1
Bonds, Lien
7.3.4.4, 9.6.8, 9.10.2, 9.10.3
Bonds, Performance, and Payment
7.3.4.4, 9.6.7, 9.10.3, **11.1.2**, 11.1.3, **11.5**
Building Information Models Use and Reliance
1.8
Building Permit
3.7.1
Capitalization
1.3
Certificate of Substantial Completion
9.8.3, 9.8.4, 9.8.5

SAMPLE

AIA Document A201™ – 2017. Copyright © 1911, 1915, 1918, 1925, 1937, 1951, 1958, 1961, 1963, 1966, 1970, 1976, 1987, 1997, 2007 and 2017 by The American Institute of Architects. **All rights reserved. WARNING: This AIA® Document is protected by U.S. Copyright Law and International Treaties. Unauthorized reproduction or distribution of this AIA® Document, or any portion of it, may result in severe civil and criminal penalties, and will be prosecuted to the maximum extent possible under the law.** This document was produced by AIA software at 08:34:20 ET on 11/19/2018 under Order No.5013131753 which expires on 10/31/2019, and is not for resale.
User Notes:

(1799450219)

Certificates for Payment
4.2.1, 4.2.5, 4.2.9, 9.3.3, **9.4**, 9.5, 9.6.1, 9.6.6, 9.7, 9.10.1, 9.10.3, 14.1.1.3, 14.2.4, 15.1.4
Certificates of Inspection, Testing or Approval
13.4.4
Certificates of Insurance
9.10.2
Change Orders
1.1.1, 3.4.2, 3.7.4, 3.8.2.3, 3.11, 3.12.8, 4.2.8, 5.2.3, 7.1.2, 7.1.3, **7.2**, 7.3.2, 7.3.7, 7.3.9, 7.3.10, 8.3.1, 9.3.1.1, 9.10.3, 10.3.2, 11.2, 11.5, 12.1.2
Change Orders, Definition of
7.2.1
CHANGES IN THE WORK
2.2.2, 3.11, 4.2.8, **7**, 7.2.1, 7.3.1, 7.4, 8.3.1, 9.3.1.1, 11.5
Claims, Definition of
15.1.1
Claims, Notice of
1.6.2, 15.1.3
CLAIMS AND DISPUTES
3.2.4, 6.1.1, 6.3, 7.3.9, 9.3.3, 9.10.4, 10.3.3, **15**, 15.4
Claims and Timely Assertion of Claims
15.4.1
Claims for Additional Cost
3.2.4, 3.3.1, 3.7.4, 7.3.9, 9.5.2, 10.2.5, 10.3.2, **15.1.5**
Claims for Additional Time
3.2.4, 3.3.1, 3.7.4, 6.1.1, 8.3.2, 9.5.2, 10.3.2, **15.1.6**
Concealed or Unknown Conditions, Claims for
3.7.4
Claims for Damages
3.2.4, 3.18, 8.3.3, 9.5.1, 9.6.7, 10.2.5, 10.3.3, 11.3, 11.3.2, 14.2.4, 15.1.7
Claims Subject to Arbitration
15.4.1
Cleaning Up
3.15, 6.3
Commencement of the Work, Conditions Relating to
2.2.1, 3.2.2, 3.4.1, 3.7.1, 3.10.1, 3.12.6, 5.2.1, 5.2.3, 6.2.2, 8.1.2, 8.2.2, 8.3.1, 11.1, 11.2, **15.1.5**
Commencement of the Work, Definition of
8.1.2
Communications
3.9.1, **4.2.4**
Completion, Conditions Relating to
3.4.1, 3.11, 3.15, 4.2.2, 4.2.9, 8.2, 9.4.2, 9.8, 9.9.1, 9.10, 12.2, 14.1.2, 15.1.2
COMPLETION, PAYMENTS AND
9
Completion, Substantial
3.10.1, 4.2.9, 8.1.1, 8.1.3, 8.2.3, 9.4.2, 9.8, 9.9.1, 9.10.3, 12.2, 15.1.2
Compliance with Laws
2.3.2, 3.2.3, 3.6, 3.7, 3.12.10, 3.13, 9.6.4, 10.2.2, 13.1, 13.3, 13.4.1, 13.4.2, 13.5, 14.1.1, 14.2.1.3, 15.2.8, 15.4.2, 15.4.3
Concealed or Unknown Conditions
3.7.4, 4.2.8, 8.3.1, 10.3
Conditions of the Contract
1.1.1, 6.1.1, 6.1.4
Consent, Written
3.4.2, 3.14.2, 4.1.2, 9.8.5, 9.9.1, 9.10.2, 9.10.3, 13.2, 15.4.4.2
Consolidation or Joinder
15.4.4
CONSTRUCTION BY OWNER OR BY SEPARATE CONTRACTORS
1.1.4, **6**
Construction Change Directive, Definition of
7.3.1
Construction Change Directives
1.1.1, 3.4.2, 3.11, 3.12.8, 4.2.8, 7.1.1, 7.1.2, 7.1.3, **7.3**, 9.3.1.1
Construction Schedules, Contractor's
3.10, 3.11, 3.12.1, 3.12.2, 6.1.3, 15.1.6.2
Contingent Assignment of Subcontracts
5.4, 14.2.2.2
Continuing Contract Performance
15.1.4
Contract, Definition of
1.1.2
CONTRACT, TERMINATION OR SUSPENSION OF THE
5.4.1.1, 5.4.2, 11.5, **14**
Contract Administration
3.1.3, 4, 9.4, 9.5
Contract Award and Execution, Conditions Relating to
3.7.1, 3.10, 5.2, 6.1
Contract Documents, Copies Furnished and Use of
1.5.2, 2.3.6, 5.3
Contract Documents, Definition of
1.1.1
Contract Sum
2.2.2, 2.2.4, 3.7.4, 3.7.5, 3.8, 3.10.2, 5.2.3, 7.3, 7.4, **9.1**, 9.2, 9.4.2, 9.5.1.4, 9.6.7, 9.7, 10.3.2, 11.5, 12.1.2, 12.3, 14.2.4, 14.3.2, 15.1.4.2, **15.1.5, 15.2.5**
Contract Sum, Definition of
9.1
Contract Time
1.1.4, 2.2.1, 2.2.2, 3.7.4, 3.7.5, 3.10.2, 5.2.3, 6.1.5, 7.2.1.3, 7.3.1, 7.3.5, 7.3.6, 7, 7, 7.3.10, 7.4, 8.1.1, 8.2.1, 8.2.3, 8.3.1, 9.5.1, 9.7, 10.3.2, 12.1.1, 12.1.2, 14.3.2, 15.1.4.2, 15.1.6.1, 15.2.5
Contract Time, Definition of
8.1.1
CONTRACTOR
3
Contractor, Definition of
3.1, 6.1.2
Contractor's Construction and Submittal Schedules
3.10, 3.12.1, 3.12.2, 4.2.3, 6.1.3, 15.1.6.2

SAMPLE

AIA Document A201™ – 2017. Copyright © 1911, 1915, 1918, 1925, 1937, 1951, 1958, 1961, 1963, 1966, 1970, 1976, 1987, 1997, 2007 and 2017 by The American Institute of Architects. **All rights reserved. WARNING: This AIA® Document is protected by U.S. Copyright Law and International Treaties. Unauthorized reproduction or distribution of this AIA® Document, or any portion of it, may result in severe civil and criminal penalties, and will be prosecuted to the maximum extent possible under the law.** This document was produced by AIA software at 08:34:20 ET on 11/19/2018 under Order No.5013131753 which expires on 10/31/2019, and is not for resale.
User Notes:

(1799450219)

Contractor's Employees
2.2.4, 3.3.2, 3.4.3, 3.8.1, 3.9, 3.18.2, 4.2.3, 4.2.6, 10.2, 10.3, 11.3, 14.1, 14.2.1.1
Contractor's Liability Insurance
11.1
Contractor's Relationship with Separate Contractors and Owner's Forces
3.12.5, 3.14.2, 4.2.4, 6, 11.3, 12.2.4
Contractor's Relationship with Subcontractors
1.2.2, 2.2.4, 3.3.2, 3.18.1, 3.18.2, 4.2.4, 5, 9.6.2, 9.6.7, 9.10.2, 11.2, 11.3, 11.4
Contractor's Relationship with the Architect
1.1.2, 1.5, 2.3.3, 3.1.3, 3.2.2, 3.2.3, 3.2.4, 3.3.1, 3.4.2, 3.5.1, 3.7.4, 3.10, 3.11, 3.12, 3.16, 3.18, 4.2, 5.2, 6.2.2, 7, 8.3.1, 9.2, 9.3, 9.4, 9.5, 9.7, 9.8, 9.9, 10.2.6, 10.3, 11.3, 12, 13.4, 15.1.3, 15.2.1
Contractor's Representations
3.2.1, 3.2.2, 3.5, 3.12.6, 6.2.2, 8.2.1, 9.3.3, 9.8.2
Contractor's Responsibility for Those Performing the Work
3.3.2, 3.18, 5.3, 6.1.3, 6.2, 9.5.1, 10.2.8
Contractor's Review of Contract Documents
3.2
Contractor's Right to Stop the Work
2.2.2, 9.7
Contractor's Right to Terminate the Contract
14.1
Contractor's Submittals
3.10, 3.11, 3.12, 4.2.7, 5.2.1, 5.2.3, 9.2, 9.3, 9.8.2, 9.8.3, 9.9.1, 9.10.2, 9.10.3
Contractor's Superintendent
3.9, 10.2.6
Contractor's Supervision and Construction Procedures
1.2.2, 3.3, 3.4, 3.12.10, 4.2.2, 4.2.7, 6.1.3, 6.2.4, 7.1.3, 7.3.4, 7.3.6, 8.2, 10, 12, 14, 15.1.4
Coordination and Correlation
1.2, 3.2.1, 3.3.1, 3.10, 3.12.6, 6.1.3, 6.2.1
Copies Furnished of Drawings and Specifications
1.5, 2.3.6, 3.11
Copyrights
1.5, **3.17**
Correction of Work
2.5, 3.7.3, 9.4.2, 9.8.2, 9.8.3, 9.9.1, 12.1.2, **12.2**, 12.3, 15.1.3.1, 15.1.3.2, 15.2.1
Correlation and Intent of the Contract Documents
1.2
Cost, Definition of
7.3.4
Costs
2.5, 3.2.4, 3.7.3, 3.8.2, 3.15.2, 5.4.2, 6.1.1, 6.2.3, 7.3.3.3, 7.3.4, 7.3.8, 7.3.9, 9.10.2, 10.3.2, 10.3.6, 11.2, 12.1.2, 12.2.1, 12.2.4, 13.4, 14
Cutting and Patching
3.14, 6.2.5
Damage to Construction of Owner or Separate Contractors
3.14.2, 6.2.4, 10.2.1.2, 10.2.5, 10.4, 12.2.4
Damage to the Work
3.14.2, 9.9.1, 10.2.1.2, 10.2.5, 10.4, 12.2.4
Damages, Claims for
3.2.4, 3.18, 6.1.1, 8.3.3, 9.5.1, 9.6.7, 10.3.3, 11.3.2, 11.3, 14.2.4, 15.1.7
Damages for Delay
6.2.3, 8.3.3, 9.5.1.6, 9.7, 10.3.2, 14.3.2
Date of Commencement of the Work, Definition of
8.1.2
Date of Substantial Completion, Definition of
8.1.3
Day, Definition of
8.1.4
Decisions of the Architect
3.7.4, 4.2.6, 4.2.7, 4.2.11, 4.2.12, 4.2.13, 6.3, 7.3.4, 7.3.9, 8.1.3, 8.3.1, 9.2, 9.4, 9.5.1, 9.8.4, 9.9.1, 13.4.2, 14.2.2, 14.2.4, 15.1, 15.2
Decisions to Withhold Certification
9.4.1, **9.5**, 9.7, 14.1.1.3
Defective or Nonconforming Work, Acceptance, Rejection and Correction of
2.5, 3.5, 4.2.6, 6.2.3, 9.5.1, 9.5.3, 9.6.6, 9.8.2, 9.9.3, 9.10.4, 12.2.1
Definitions
1.1, 2.1.1, 3.1.1, 3.5, 3.12.1, 3.12.2, 3.12.3, 4.1.1, 5.1, 6.1.2, 7.2.1, 7.3.1, 8.1, 9.1, 9.8.1, 15.1.1
Delays and Extensions of Time
3.2, **3.7.4**, 5.2.3, 7.2.1, 7.3.1, **7.4**, **8.3**, 9.5.1, **9.7**, 10.3.2, **10.4**, 14.3.2, **15.1.6**, 15.2.5
Digital Data Use and Transmission
1.7
Disputes
6.3, 7.3.9, 15.1, 15.2
Documents and Samples at the Site
3.11
Drawings, Definition of
1.1.5
Drawings and Specifications, Use and Ownership of
3.11
Effective Date of Insurance
8.2.2
Emergencies
10.4, 14.1.1.2, **15.1.5**
Employees, Contractor's
3.3.2, 3.4.3, 3.8.1, 3.9, 3.18.2, 4.2.3, 4.2.6, 10.2, 10.3.3, 11.3, 14.1, 14.2.1.1
Equipment, Labor, or Materials
1.1.3, 1.1.6, 3.4, 3.5, 3.8.2, 3.8.3, 3.12, 3.13, 3.15.1, 4.2.6, 4.2.7, 5.2.1, 6.2.1, 7.3.4, 9.3.2, 9.3.3, 9.5.1.3, 9.10.2, 10.2.1, 10.2.4, 14.2.1.1, 14.2.1.2
Execution and Progress of the Work
1.1.3, 1.2.1, 1.2.2, 2.3.4, 2.3.6, 3.1, 3.3.1, 3.4.1, 3.7.1, 3.10.1, 3.12, 3.14, 4.2, 6.2.2, 7.1.3, 7.3.6, 8.2, 9.5.1, 9.9.1, 10.2, 10.3, 12.1, 12.2, 14.2, 14.3.1, 15.1.4

SAMPLE

AIA Document A201™ – 2017. Copyright © 1911, 1915, 1918, 1925, 1937, 1951, 1958, 1961, 1963, 1966, 1970, 1976, 1987, 1997, 2007 and 2017 by The American Institute of Architects. **All rights reserved. WARNING: This AIA® Document is protected by U.S. Copyright Law and International Treaties. Unauthorized reproduction or distribution of this AIA® Document, or any portion of it, may result in severe civil and criminal penalties, and will be prosecuted to the maximum extent possible under the law.** This document was produced by AIA software at 08:34:20 ET on 11/19/2018 under Order No.5013131753 which expires on 10/31/2019, and is not for resale.
User Notes: (1799450219)

Extensions of Time
3.2.4, 3.7.4, 5.2.3, 7.2.1, 7.3, 7.4, 9.5.1, 9.7, 10.3.2, 10.4, 14.3, 15.1.6, **15.2.5**
Failure of Payment
9.5.1.3, **9.7**, 9.10.2, 13.5, 14.1.1.3, 14.2.1.2
Faulty Work
(See Defective or Nonconforming Work)
Final Completion and Final Payment
4.2.1, 4.2.9, 9.8.2, **9.10**, 12.3, 14.2.4, 14.4.3
Financial Arrangements, Owner's
2.2.1, 13.2.2, 14.1.1.4
GENERAL PROVISIONS
1
Governing Law
13.1
Guarantees (See Warranty)
Hazardous Materials and Substances
10.2.4, **10.3**
Identification of Subcontractors and Suppliers
5.2.1
Indemnification
3.17, **3.18**, 9.6.8, 9.10.2, 10.3.3, 11.3
Information and Services Required of the Owner
2.1.2, **2.2**, 2.3, 3.2.2, 3.12.10.1, 6.1.3, 6.1.4, 6.2.5, 9.6.1, 9.9.2, 9.10.3, 10.3.3, 11.2, 13.4.1, 13.4.2, 14.1.1.4, 14.1.4, 15.1.4
Initial Decision
15.2
Initial Decision Maker, Definition of
1.1.8
Initial Decision Maker, Decisions
14.2.4, 15.1.4.2, 15.2.1, 15.2.2, 15.2.3, 15.2.4, 15.2.5
Initial Decision Maker, Extent of Authority
14.2.4, 15.1.4.2, 15.2.1, 15.2.2, 15.2.3, 15.2.4, 15.2.5
Injury or Damage to Person or Property
10.2.8, 10.4
Inspections
3.1.3, 3.3.3, 3.7.1, 4.2.2, 4.2.6, 4.2.9, 9.4.2, 9.8.3, 9.9.2, 9.10.1, 12.2.1, 13.4
Instructions to Bidders
1.1.1
Instructions to the Contractor
3.2.4, 3.3.1, 3.8.1, 5.2.1, 7, 8.2.2, 12, 13.4.2
Instruments of Service, Definition of
1.1.7
Insurance
6.1.1, 7.3.4, 8.2.2, 9.3.2, 9.8.4, 9.9.1, 9.10.2, 10.2.5, **11**
Insurance, Notice of Cancellation or Expiration
11.1.4, 11.2.3
Insurance, Contractor's Liability
11.1
Insurance, Effective Date of
8.2.2, 14.4.2
Insurance, Owner's Liability
11.2
Insurance, Property
10.2.5, 11.2, 11.4, 11.5
Insurance, Stored Materials
9.3.2
INSURANCE AND BONDS
11
Insurance Companies, Consent to Partial Occupancy
9.9.1
Insured loss, Adjustment and Settlement of
11.5
Intent of the Contract Documents
1.2.1, 4.2.7, 4.2.12, 4.2.13
Interest
13.5
Interpretation
1.1.8, 1.2.3, **1.4**, 4.1.1, 5.1, 6.1.2, 15.1.1
Interpretations, Written
4.2.11, 4.2.12
Judgment on Final Award
15.4.2
Labor and Materials, Equipment
1.1.3, 1.1.6, **3.4**, 3.5, 3.8.2, 3.8.3, 3.12, 3.13, 3.15.1, 5.2.1, 6.2.1, 7.3.4, 9.3.2, 9.3.3, 9.5.1.3, 9.10.2, 10.2.1, 10.2.4, 14.2.1.1, 14.2.1.2
Labor Disputes
8.3.1
Laws and Regulations
1.5, 2.3.2, 3.2.3, 3.2.4, 3.6, 3.7, 3.12.10, 3.13, 9.6.4, 9.9.1, 10.2.2, 13.1, 13.3.1, 13.4.2, 13.5, 14, 15.2.8, 15.4
Liens
2.1.2, 9.3.1, 9.3.3, 9.6.8, 9.10.2, 9.10.4, 15.2.8
Limitations, Statutes of
12.2.5, 15.1.2, 15.4.1.1
Limitations of Liability
3.2.2, 3.5, 3.12.10, 3.12.10.1, 3.17, 3.18.1, 4.2.6, 4.2.7, 6.2.2, 9.4.2, 9.6.4, 9.6.7, 9.6.8, 10.2.5, 10.3.3, 11.3, 12.2.5, 13.3.1
Limitations of Time
2.1.2, 2.2, 2.5, 3.2.2, 3.10, 3.11, 3.12.5, 3.15.1, 4.2.7, 5.2, 5.3, 5.4.1, 6.2.4, 7.3, 7.4, 8.2, 9.2, 9.3.1, 9.3.3, 9.4.1, 9.5, 9.6, 9.7, 9.8, 9.9, 9.10, 12.2, 13.4, 14, 15, 15.1.2, 15.1.3, 15.1.5
Materials, Hazardous
10.2.4, **10.3**
Materials, Labor, Equipment and
1.1.3, 1.1.6, 3.4.1, 3.5, 3.8.2, 3.8.3, 3.12, 3.13, 3.15.1, 5.2.1, 6.2.1, 7.3.4, 9.3.2, 9.3.3, 9.5.1.3, 9.10.2, 10.2.1.2, 10.2.4, 14.2.1.1, 14.2.1.2
Means, Methods, Techniques, Sequences and Procedures of Construction
3.3.1, 3.12.10, 4.2.2, 4.2.7, 9.4.2
Mechanic's Lien
2.1.2, 9.3.1, 9.3.3, 9.6.8, 9.10.2, 9.10.4, 15.2.8
Mediation
8.3.1, 15.1.3.2, 15.2.1, 15.2.5, 15.2.6, **15.3**, 15.4.1, 15.4.1.1
Minor Changes in the Work
1.1.1, 3.4.2, 3.12.8, 4.2.8, 7.1, **7.4**

SAMPLE

AIA Document A201™ – 2017. Copyright © 1911, 1915, 1918, 1925, 1937, 1951, 1958, 1961, 1963, 1966, 1970, 1976, 1987, 1997, 2007 and 2017 by The American Institute of Architects. **All rights reserved. WARNING: This AIA® Document is protected by U.S. Copyright Law and International Treaties. Unauthorized reproduction or distribution of this AIA® Document, or any portion of it, may result in severe civil and criminal penalties, and will be prosecuted to the maximum extent possible under the law.** This document was produced by AIA software at 08:34:20 ET on 11/19/2018 under Order No.5013131753 which expires on 10/31/2019, and is not for resale.
User Notes:
(1799450219)

MISCELLANEOUS PROVISIONS
13
Modifications, Definition of
1.1.1
Modifications to the Contract
1.1.1, 1.1.2, 2.5, 3.11, 4.1.2, 4.2.1, 5.2.3, 7, 8.3.1, 9.7, 10.3.2
Mutual Responsibility
6.2
Nonconforming Work, Acceptance of
9.6.6, 9.9.3, **12.3**
Nonconforming Work, Rejection and Correction of
2.4, 2.5, 3.5, 4.2.6, 6.2.4, 9.5.1, 9.8.2, 9.9.3, 9.10.4, 12.2
Notice
1.6, 1.6.1, 1.6.2, 2.1.2, 2.2.2., 2.2.3, 2.2.4, 2.5, 3.2.4, 3.3.1, 3.7.4, 3.7.5, 3.9.2, 3.12.9, 3.12.10, 5.2.1, 7.4, 8.2.2 9.6.8, 9.7, 9.10.1, 10.2.8, 10.3.2, 11.5, 12.2.2.1, 13.4.1, 13.4.2, 14.1, 14.2.2, 14.4.2, 15.1.3, 15.1.5, 15.1.6, 15.4.1
Notice of Cancellation or Expiration of Insurance
11.1.4, 11.2.3
Notice of Claims
1.6.2, 2.1.2, 3.7.4, 9.6.8, 10.2.8, **15.1.3**, 15.1.5, 15.1.6, 15.2.8, 15.3.2, 15.4.1
Notice of Testing and Inspections
13.4.1, 13.4.2
Observations, Contractor's
3.2, 3.7.4
Occupancy
2.3.1, 9.6.6, 9.8
Orders, Written
1.1.1, 2.4, 3.9.2, 7, 8.2.2, 11.5, 12.1, 12.2.2.1, 13.4.2, 14.3.1
OWNER
2
Owner, Definition of
2.1.1
Owner, Evidence of Financial Arrangements
2.2, 13.2.2, 14.1.1.4
Owner, Information and Services Required of the
2.1.2, **2.2**, 2.3, 3.2.2, 3.12.10, 6.1.3, 6.1.4, 6.2.5, 9.3.2, 9.6.1, 9.6.4, 9.9.2, 9.10.3, 10.3.3, 11.2, 13.4.1, 13.4.2, 14.1.1.4, 14.1.4, 15.1.4
Owner's Authority
1.5, 2.1.1, 2.3.32.4, 2.5, 3.4.2, 3.8.1, 3.12.10, 3.14.2, 4.1.2, 4.2.4, 4.2.9, 5.2.1, 5.2.4, 5.4.1, 6.1, 6.3, 7.2.1, 7.3.1, 8.2.2, 8.3.1, 9.3.2, 9.5.1, 9.6.4, 9.9.1, 9.10.2, 10.3.2, 11.4, 11.5, 12.2.2, 12.3, 13.2.2, 14.3, 14.4, 15.2.7
Owner's Insurance
11.2
Owner's Relationship with Subcontractors
1.1.2, 5.2, 5.3, 5.4, 9.6.4, 9.10.2, 14.2.2
Owner's Right to Carry Out the Work
2.5, 14.2.2
Owner's Right to Clean Up
6.3
Owner's Right to Perform Construction and to Award Separate Contracts
6.1
Owner's Right to Stop the Work
2.4
Owner's Right to Suspend the Work
14.3
Owner's Right to Terminate the Contract
14.2, 14.4
Ownership and Use of Drawings, Specifications and Other Instruments of Service
1.1.1, 1.1.6, 1.1.7, **1.5**, 2.3.6, 3.2.2, 3.11, 3.17, 4.2.12, 5.3
Partial Occupancy or Use
9.6.6, **9.9**
Patching, Cutting and
3.14, 6.2.5
Patents
3.17
Payment, Applications for
4.2.5, 7.3.9, 9.2, **9.3**, 9.4, 9.5, 9.6.3, 9.7, 9.8.5, 9.10.1, 14.2.3, 14.2.4, 14.4.3
Payment, Certificates for
4.2.5, 4.2.9, 9.3.3, **9.4**, 9.5, 9.6.1, 9.6.6, 9.7, 9.10.1, 9.10.3, 14.1.1.3, 14.2.4
Payment, Failure of
9.5.1.3, **9.7**, 9.10.2, 13.5, 14.1.1.3, 14.2.1.2
Payment, Final
4.2.1, 4.2.9, **9.10**, 12.3, 14.2.4, 14.4.3
Payment Bond, Performance Bond and
7.3.4.4, 9.6.7, 9.10.3, **11.1.2**
Payments, Progress
9.3, **9.6**, 9.8.5, 9.10.3, 14.2.3, 15.1.4
PAYMENTS AND COMPLETION
9
Payments to Subcontractors
5.4.2, 9.5.1.3, 9.6.2, 9.6.3, 9.6.4, 9.6.7, 14.2.1.2
PCB
10.3.1
Performance Bond and Payment Bond
7.3.4.4, 9.6.7, 9.10.3, **11.1.2**
Permits, Fees, Notices and Compliance with Laws
2.3.1, **3.7**, 3.13, 7.3.4.4, 10.2.2
PERSONS AND PROPERTY, PROTECTION OF
10
Polychlorinated Biphenyl
10.3.1
Product Data, Definition of
3.12.2
Product Data and Samples, Shop Drawings
3.11, **3.12**, 4.2.7
Progress and Completion
4.2.2, **8.2**, 9.8, 9.9.1, 14.1.4, 15.1.4
Progress Payments
9.3, **9.6**, 9.8.5, 9.10.3, 14.2.3, 15.1.4

SAMPLE

AIA Document A201™ – 2017. Copyright © 1911, 1915, 1918, 1925, 1937, 1951, 1958, 1961, 1963, 1966, 1970, 1976, 1987, 1997, 2007 and 2017 by The American Institute of Architects. **All rights reserved. WARNING: This AIA® Document is protected by U.S. Copyright Law and International Treaties. Unauthorized reproduction or distribution of this AIA® Document, or any portion of it, may result in severe civil and criminal penalties, and will be prosecuted to the maximum extent possible under the law.** This document was produced by AIA software at 08:34:20 ET on 11/19/2018 under Order No.5013131753 which expires on 10/31/2019, and is not for resale.
User Notes:

(1799450219)

Project, Definition of
1.1.4
Project Representatives
4.2.10
Property Insurance
10.2.5, **11.2**
Proposal Requirements
1.1.1
PROTECTION OF PERSONS AND PROPERTY
10
Regulations and Laws
1.5, 2.3.2, 3.2.3, 3.6, 3.7, 3.12.10, 3.13, 9.6.4, 9.9.1, 10.2.2, 13.1, 13.3, 13.4.1, 13.4.2, 13.5, 14, 15.2.8, 15.4
Rejection of Work
4.2.6, 12.2.1
Releases and Waivers of Liens
9.3.1, 9.10.2
Representations
3.2.1, 3.5, 3.12.6, 8.2.1, 9.3.3, 9.4.2, 9.5.1, 9.10.1
Representatives
2.1.1, 3.1.1, 3.9, 4.1.1, 4.2.10, 13.2.1
Responsibility for Those Performing the Work
3.3.2, 3.18, 4.2.2, 4.2.3, 5.3, 6.1.3, 6.2, 6.3, 9.5.1, 10
Retainage
9.3.1, 9.6.2, 9.8.5, 9.9.1, 9.10.2, 9.10.3
Review of Contract Documents and Field Conditions by Contractor
3.2, 3.12.7, 6.1.3
Review of Contractor's Submittals by Owner and Architect
3.10.1, 3.10.2, 3.11, 3.12, 4.2, 5.2, 6.1.3, 9.2, 9.8.2
Review of Shop Drawings, Product Data and Samples by Contractor
3.12
Rights and Remedies
1.1.2, 2.4, 2.5, 3.5, 3.7.4, 3.15.2, 4.2.6, 5.3, 5.4, 6.1, 6.3, 7.3.1, 8.3, 9.5.1, 9.7, 10.2.5, 10.3, 12.2.1, 12.2.2, 12.2.4, **13.3**, 14, 15.4
Royalties, Patents and Copyrights
3.17
Rules and Notices for Arbitration
15.4.1
Safety of Persons and Property
10.2, 10.4
Safety Precautions and Programs
3.3.1, 4.2.2, 4.2.7, 5.3, **10.1**, 10.2, 10.4
Samples, Definition of
3.12.3
Samples, Shop Drawings, Product Data and
3.11, **3.12**, 4.2.7
Samples at the Site, Documents and
3.11
Schedule of Values
9.2, 9.3.1
Schedules, Construction
3.10, 3.12.1, 3.12.2, 6.1.3, 15.1.6.2
Separate Contracts and Contractors
1.1.4, 3.12.5, 3.14.2, 4.2.4, 4.2.7, 6, 8.3.1, 12.1.2
Separate Contractors, Definition of
6.1.1
Shop Drawings, Definition of
3.12.1
Shop Drawings, Product Data and Samples
3.11, **3.12**, 4.2.7
Site, Use of
3.13, 6.1.1, 6.2.1
Site Inspections
3.2.2, 3.3.3, 3.7.1, 3.7.4, 4.2, 9.9.2, 9.4.2, 9.10.1, 13.4
Site Visits, Architect's
3.7.4, 4.2.2, 4.2.9, 9.4.2, 9.5.1, 9.9.2, 9.10.1, 13.4
Special Inspections and Testing
4.2.6, 12.2.1, 13.4
Specifications, Definition of
1.1.6
Specifications
1.1.1, **1.1.6**, 1.2.2, 1.5, 3.12.10, 3.17, 4.2.14
Statute of Limitations
15.1.2, 15.4.1.1
Stopping the Work
2.2.2, 2.4, 9.7, 10.3, 14.1
Stored Materials
6.2.1, 9.3.2, 10.2.1.2, 10.2.4
Subcontractor, Definition of
5.1.1
SUBCONTRACTORS
5
Subcontractors, Work by
1.2.2, 3.3.2, 3.12.1, 3.18, 4.2.3, 5.2.3, 5.3, 5.4, 9.3.1.2, 9.6.7
Subcontractual Relations
5.3, 5.4, 9.3.1.2, 9.6, 9.10, 10.2.1, 14.1, 14.2.1
Submittals
3.10, 3.11, 3.12, 4.2.7, 5.2.1, 5.2.3, 7.3.4, 9.2, 9.3, 9.8, 9.9.1, 9.10.2, 9.10.3
Submittal Schedule
3.10.2, 3.12.5, 4.2.7
Subrogation, Waivers of
6.1.1, **11.3**
Substances, Hazardous
10.3
Substantial Completion
4.2.9, 8.1.1, 8.1.3, 8.2.3, 9.4.2, **9.8**, 9.9.1, 9.10.3, 12.2, 15.1.2
Substantial Completion, Definition of
9.8.1
Substitution of Subcontractors
5.2.3, 5.2.4
Substitution of Architect
2.3.3
Substitutions of Materials
3.4.2, 3.5, 7.3.8
Sub-subcontractor, Definition of
5.1.2

SAMPLE

AIA Document A201™ – 2017. Copyright © 1911, 1915, 1918, 1925, 1937, 1951, 1958, 1961, 1963, 1966, 1970, 1976, 1987, 1997, 2007 and 2017 by The American Institute of Architects. **All rights reserved. WARNING: This AIA® Document is protected by U.S. Copyright Law and International Treaties. Unauthorized reproduction or distribution of this AIA® Document, or any portion of it, may result in severe civil and criminal penalties, and will be prosecuted to the maximum extent possible under the law.** This document was produced by AIA software at 08:34:20 ET on 11/19/2018 under Order No.5013131753 which expires on 10/31/2019, and is not for resale.
User Notes:

(1799450219)

Subsurface Conditions
3.7.4
Successors and Assigns
13.2
Superintendent
3.9, 10.2.6
Supervision and Construction Procedures
1.2.2, **3.3**, 3.4, 3.12.10, 4.2.2, 4.2.7, 6.1.3, 6.2.4, 7.1.3, 7.3.4, 8.2, 8.3.1, 9.4.2, 10, 12, 14, 15.1.4
Suppliers
1.5, 3.12.1, 4.2.4, 4.2.6, 5.2.1, 9.3, 9.4.2, 9.5.4, 9.6, 9.10.5, 14.2.1
Surety
5.4.1.2, 9.6.8, 9.8.5, 9.10.2, 9.10.3, 11.1.2, 14.2.2, 15.2.7
Surety, Consent of
9.8.5, 9.10.2, 9.10.3
Surveys
1.1.7, 2.3.4
Suspension by the Owner for Convenience
14.3
Suspension of the Work
3.7.5, 5.4.2, 14.3
Suspension or Termination of the Contract
5.4.1.1, 14
Taxes
3.6, 3.8.2.1, 7.3.4.4
Termination by the Contractor
14.1, 15.1.7
Termination by the Owner for Cause
5.4.1.1, **14.2,** 15.1.7
Termination by the Owner for Convenience
14.4
Termination of the Architect
2.3.3
Termination of the Contractor Employment
14.2.2

TERMINATION OR SUSPENSION OF THE CONTRACT
14
Tests and Inspections
3.1.3, 3.3.3, 3.7.1, 4.2.2, 4.2.6, 4.2.9, 9.4.2, 9.8.3, 9.9.2, 9.10.1, 10.3.2, 12.2.1, **13.4**
TIME
8
Time, Delays and Extensions of
3.2.4, 3.7.4, 5.2.3, 7.2.1, 7.3.1, 7.4, **8.3**, 9.5.1, 9.7, 10.3.2, 10.4, 14.3.2, 15.1.6, 15.2.5
Time Limits
2.1.2, 2.2, 2.5, 3.2.2, 3.10, 3.11, 3.12.5, 3.15.1, 4.2, 5.2, 5.3, 5.4, 6.2.4, 7.3, 7.4, 8.2, 9.2, 9.3.1, 9.3.3, 9.4.1, 9.5, 9.6, 9.7, 9.8, 9.9, 9.10, 12.2, 13.4, 14, 15.1.2, 15.1.3, 15.4
Time Limits on Claims
3.7.4, 10.2.8, 15.1.2, 15.1.3
Title to Work
9.3.2, 9.3.3
UNCOVERING AND CORRECTION OF WORK
12
Uncovering of Work
12.1
Unforeseen Conditions, Concealed or Unknown
3.7.4, 8.3.1, 10.3
Unit Prices
7.3.3.2, 9.1.2
Use of Documents
1.1.1, 1.5, 2.3.6, 3.12.6, 5.3
Use of Site
3.13, 6.1.1, 6.2.1
Values, Schedule of
9.2, 9.3.1
Waiver of Claims by the Architect
13.3.2
Waiver of Claims by the Contractor
9.10.5, 13.3.2, **15.1.7**
Waiver of Claims by the Owner
9.9.3, 9.10.3, 9.10.4, 12.2.2.1, 13.3.2, 14.2.4, **15.1.7**
Waiver of Consequential Damages
14.2.4, 15.1.7
Waiver of Liens
9.3, 9.10.2, 9.10.4
Waivers of Subrogation
6.1.1, **11.3**
Warranty
3.5, 4.2.9, 9.3.3, 9.8.4, 9.9.1, 9.10.2, 9.10.4, 12.2.2, 15.1.2
Weather Delays
8.3, 15.1.6.2
Work, Definition of
1.1.3
Written Consent
1.5.2, 3.4.2, 3.7.4, 3.12.8, 3.14.2, 4.1.2, 9.3.2, 9.10.3, 13.2, 13.3.2, 15.4.4.2
Written Interpretations
4.2.11, 4.2.12
Written Orders
1.1.1, 2.4, 3.9, 7, 8.2.2, 12.1, 12.2, 13.4.2, 14.3.1

SAMPLE

AIA Document A201™ – 2017. Copyright © 1911, 1915, 1918, 1925, 1937, 1951, 1958, 1961, 1963, 1966, 1970, 1976, 1987, 1997, 2007 and 2017 by The American Institute of Architects. **All rights reserved. WARNING: This AIA® Document is protected by U.S. Copyright Law and International Treaties. Unauthorized reproduction or distribution of this AIA® Document, or any portion of it, may result in severe civil and criminal penalties, and will be prosecuted to the maximum extent possible under the law.** This document was produced by AIA software at 08:34:20 ET on 11/19/2018 under Order No.5013131753 which expires on 10/31/2019, and is not for resale.
User Notes:
(1799450219)

ARTICLE 1 GENERAL PROVISIONS

§ 1.1 Basic Definitions

§ 1.1.1 The Contract Documents

The Contract Documents are enumerated in the Agreement between the Owner and Contractor (hereinafter the Agreement) and consist of the Agreement, Conditions of the Contract (General, Supplementary and other Conditions), Drawings, Specifications, Addenda issued prior to execution of the Contract, other documents listed in the Agreement, and Modifications issued after execution of the Contract. A Modification is (1) a written amendment to the Contract signed by both parties, (2) a Change Order, (3) a Construction Change Directive, or (4) a written order for a minor change in the Work issued by the Architect. Unless specifically enumerated in the Agreement, the Contract Documents do not include the advertisement or invitation to bid, Instructions to Bidders, sample forms, other information furnished by the Owner in anticipation of receiving bids or proposals, the Contractor's bid or proposal, or portions of Addenda relating to bidding or proposal requirements.

§ 1.1.2 The Contract

The Contract Documents form the Contract for Construction. The Contract represents the entire and integrated agreement between the parties hereto and supersedes prior negotiations, representations, or agreements, either written or oral. The Contract may be amended or modified only by a Modification. The Contract Documents shall not be construed to create a contractual relationship of any kind (1) between the Contractor and the Architect or the Architect's consultants, (2) between the Owner and a Subcontractor or a Sub-subcontractor, (3) between the Owner and the Architect or the Architect's consultants, or (4) between any persons or entities other than the Owner and the Contractor. The Architect shall, however, be entitled to performance and enforcement of obligations under the Contract intended to facilitate performance of the Architect's duties.

§ 1.1.3 The Work

The term "Work" means the construction and services required by the Contract Documents, whether completed or partially completed, and includes all other labor, materials, equipment, and services provided or to be provided by the Contractor to fulfill the Contractor's obligations. The Work may constitute the whole or a part of the Project.

§ 1.1.4 The Project

The Project is the total construction of which the Work performed under the Contract Documents may be the whole or a part and which may include construction by the Owner and by Separate Contractors.

§ 1.1.5 The Drawings

The Drawings are the graphic and pictorial portions of the Contract Documents showing the design, location and dimensions of the Work, generally including plans, elevations, sections, details, schedules, and diagrams.

§ 1.1.6 The Specifications

The Specifications are that portion of the Contract Documents consisting of the written requirements for materials, equipment, systems, standards and workmanship for the Work, and performance of related services.

§ 1.1.7 Instruments of Service

Instruments of Service are representations, in any medium of expression now known or later developed, of the tangible and intangible creative work performed by the Architect and the Architect's consultants under their respective professional services agreements. Instruments of Service may include, without limitation, studies, surveys, models, sketches, drawings, specifications, and other similar materials.

§ 1.1.8 Initial Decision Maker

The Initial Decision Maker is the person identified in the Agreement to render initial decisions on Claims in accordance with Section 15.2. The Initial Decision Maker shall not show partiality to the Owner or Contractor and shall not be liable for results of interpretations or decisions rendered in good faith.

§ 1.2 Correlation and Intent of the Contract Documents

§ 1.2.1 The intent of the Contract Documents is to include all items necessary for the proper execution and completion of the Work by the Contractor. The Contract Documents are complementary, and what is required by one shall be as binding as if required by all; performance by the Contractor shall be required only to the extent consistent with the Contract Documents and reasonably inferable from them as being necessary to produce the indicated results.

SAMPLE

AIA Document A201™ – 2017. Copyright © 1911, 1915, 1918, 1925, 1937, 1951, 1958, 1961, 1963, 1966, 1970, 1976, 1987, 1997, 2007 and 2017 by The American Institute of Architects. **All rights reserved. WARNING: This AIA® Document is protected by U.S. Copyright Law and International Treaties. Unauthorized reproduction or distribution of this AIA® Document, or any portion of it, may result in severe civil and criminal penalties, and will be prosecuted to the maximum extent possible under the law.** This document was produced by AIA software at 08:34:20 ET on 11/19/2018 under Order No.5013131753 which expires on 10/31/2019, and is not for resale.
User Notes: (1799450219)

§ 1.2.1.1 The invalidity of any provision of the Contract Documents shall not invalidate the Contract or its remaining provisions. If it is determined that any provision of the Contract Documents violates any law, or is otherwise invalid or unenforceable, then that provision shall be revised to the extent necessary to make that provision legal and enforceable. In such case the Contract Documents shall be construed, to the fullest extent permitted by law, to give effect to the parties' intentions and purposes in executing the Contract.

§ 1.2.2 Organization of the Specifications into divisions, sections and articles, and arrangement of Drawings shall not control the Contractor in dividing the Work among Subcontractors or in establishing the extent of Work to be performed by any trade.

§ 1.2.3 Unless otherwise stated in the Contract Documents, words that have well-known technical or construction industry meanings are used in the Contract Documents in accordance with such recognized meanings.

§ 1.3 Capitalization

Terms capitalized in these General Conditions include those that are (1) specifically defined, (2) the titles of numbered articles, or (3) the titles of other documents published by the American Institute of Architects.

§ 1.4 Interpretation

In the interest of brevity the Contract Documents frequently omit modifying words such as "all" and "any" and articles such as "the" and "an," but the fact that a modifier or an article is absent from one statement and appears in another is not intended to affect the interpretation of either statement.

§ 1.5 Ownership and Use of Drawings, Specifications, and Other Instruments of Service

§ 1.5.1 The Architect and the Architect's consultants shall be deemed the authors and owners of their respective Instruments of Service, including the Drawings and Specifications, and retain all common law, statutory, and other reserved rights in their Instruments of Service, including copyrights. The Contractor, Subcontractors, Sub-subcontractors, and suppliers shall not own or claim a copyright in the Instruments of Service. Submittal or distribution to meet official regulatory requirements or for other purposes in connection with the Project is not to be construed as publication in derogation of the Architect's or Architect's consultants' reserved rights.

§ 1.5.2 The Contractor, Subcontractors, Sub-subcontractors, and suppliers are authorized to use and reproduce the Instruments of Service provided to them, subject to any protocols established pursuant to Sections 1.7 and 1.8, solely and exclusively for execution of the Work. All copies made under this authorization shall bear the copyright notice, if any, shown on the Instruments of Service. The Contractor, Subcontractors, Sub-subcontractors, and suppliers may not use the Instruments of Service on other projects or for additions to the Project outside the scope of the Work without the specific written consent of the Owner, Architect, and the Architect's consultants.

§ 1.6 Notice

§ 1.6.1 Except as otherwise provided in Section 1.6.2, where the Contract Documents require one party to notify or give notice to the other party, such notice shall be provided in writing to the designated representative of the party to whom the notice is addressed and shall be deemed to have been duly served if delivered in person, by mail, by courier, or by electronic transmission if a method for electronic transmission is set forth in the Agreement.

§ 1.6.2 Notice of Claims as provided in Section 15.1.3 shall be provided in writing and shall be deemed to have been duly served only if delivered to the designated representative of the party to whom the notice is addressed by certified or registered mail, or by courier providing proof of delivery.

§ 1.7 Digital Data Use and Transmission

The parties shall agree upon protocols governing the transmission and use of Instruments of Service or any other information or documentation in digital form. The parties will use AIA Document E203™–2013, Building Information Modeling and Digital Data Exhibit, to establish the protocols for the development, use, transmission, and exchange of digital data.

§ 1.8 Building Information Models Use and Reliance

Any use of, or reliance on, all or a portion of a building information model without agreement to protocols governing the use of, and reliance on, the information contained in the model and without having those protocols set forth in AIA Document E203™–2013, Building Information Modeling and Digital Data Exhibit, and the requisite AIA Document

SAMPLE

AIA Document A201™ – 2017. Copyright © 1911, 1915, 1918, 1925, 1937, 1951, 1958, 1961, 1963, 1966, 1970, 1976, 1987, 1997, 2007 and 2017 by The American Institute of Architects. **All rights reserved. WARNING: This AIA® Document is protected by U.S. Copyright Law and International Treaties. Unauthorized reproduction or distribution of this AIA® Document, or any portion of it, may result in severe civil and criminal penalties, and will be prosecuted to the maximum extent possible under the law.** This document was produced by AIA software at 08:34:20 ET on 11/19/2018 under Order No.5013131753 which expires on 10/31/2019, and is not for resale.
User Notes:

(1799450219)

G202™–2013, Project Building Information Modeling Protocol Form, shall be at the using or relying party's sole risk and without liability to the other party and its contractors or consultants, the authors of, or contributors to, the building information model, and each of their agents and employees.

ARTICLE 2 OWNER

§ 2.1 General

§ 2.1.1 The Owner is the person or entity identified as such in the Agreement and is referred to throughout the Contract Documents as if singular in number. The Owner shall designate in writing a representative who shall have express authority to bind the Owner with respect to all matters requiring the Owner's approval or authorization. Except as otherwise provided in Section 4.2.1, the Architect does not have such authority. The term "Owner" means the Owner or the Owner's authorized representative.

§ 2.1.2 The Owner shall furnish to the Contractor, within fifteen days after receipt of a written request, information necessary and relevant for the Contractor to evaluate, give notice of, or enforce mechanic's lien rights. Such information shall include a correct statement of the record legal title to the property on which the Project is located, usually referred to as the site, and the Owner's interest therein.

§ 2.2 Evidence of the Owner's Financial Arrangements

§ 2.2.1 Prior to commencement of the Work and upon written request by the Contractor, the Owner shall furnish to the Contractor reasonable evidence that the Owner has made financial arrangements to fulfill the Owner's obligations under the Contract. The Contractor shall have no obligation to commence the Work until the Owner provides such evidence. If commencement of the Work is delayed under this Section 2.2.1, the Contract Time shall be extended appropriately.

§ 2.2.2 Following commencement of the Work and upon written request by the Contractor, the Owner shall furnish to the Contractor reasonable evidence that the Owner has made financial arrangements to fulfill the Owner's obligations under the Contract only if (1) the Owner fails to make payments to the Contractor as the Contract Documents require; (2) the Contractor identifies in writing a reasonable concern regarding the Owner's ability to make payment when due; or (3) a change in the Work materially changes the Contract Sum. If the Owner fails to provide such evidence, as required, within fourteen days of the Contractor's request, the Contractor may immediately stop the Work and, in that event, shall notify the Owner that the Work has stopped. However, if the request is made because a change in the Work materially changes the Contract Sum under (3) above, the Contractor may immediately stop only that portion of the Work affected by the change until reasonable evidence is provided. If the Work is stopped under this Section 2.2.2, the Contract Time shall be extended appropriately and the Contract Sum shall be increased by the amount of the Contractor's reasonable costs of shutdown, delay and start-up, plus interest as provided in the Contract Documents.

§ 2.2.3 After the Owner furnishes evidence of financial arrangements under this Section 2.2, the Owner shall not materially vary such financial arrangements without prior notice to the Contractor.

§ 2.2.4 Where the Owner has designated information furnished under this Section 2.2 as "confidential," the Contractor shall keep the information confidential and shall not disclose it to any other person. However, the Contractor may disclose "confidential" information, after seven (7) days' notice to the Owner, where disclosure is required by law, including a subpoena or other form of compulsory legal process issued by a court or governmental entity, or by court or arbitrator(s) order. The Contractor may also disclose "confidential" information to its employees, consultants, sureties, Subcontractors and their employees, Sub-subcontractors, and others who need to know the content of such information solely and exclusively for the Project and who agree to maintain the confidentiality of such information.

§ 2.3 Information and Services Required of the Owner

§ 2.3.1 Except for permits and fees that are the responsibility of the Contractor under the Contract Documents, including those required under Section 3.7.1, the Owner shall secure and pay for necessary approvals, easements, assessments and charges required for construction, use or occupancy of permanent structures or for permanent changes in existing facilities.

§ 2.3.2 The Owner shall retain an architect lawfully licensed to practice architecture, or an entity lawfully practicing architecture, in the jurisdiction where the Project is located. That person or entity is identified as the Architect in the Agreement and is referred to throughout the Contract Documents as if singular in number.

SAMPLE

AIA Document A201™ – 2017. Copyright © 1911, 1915, 1918, 1925, 1937, 1951, 1958, 1961, 1963, 1966, 1970, 1976, 1987, 1997, 2007 and 2017 by The American Institute of Architects. **All rights reserved. WARNING: This AIA® Document is protected by U.S. Copyright Law and International Treaties. Unauthorized reproduction or distribution of this AIA® Document, or any portion of it, may result in severe civil and criminal penalties, and will be prosecuted to the maximum extent possible under the law.** This document was produced by AIA software at 08:34:20 ET on 11/19/2018 under Order No.5013131753 which expires on 10/31/2019, and is not for resale.
User Notes:

(1799450219)

§ 2.3.3 If the employment of the Architect terminates, the Owner shall employ a successor to whom the Contractor has no reasonable objection and whose status under the Contract Documents shall be that of the Architect.

§ 2.3.4 The Owner shall furnish surveys describing physical characteristics, legal limitations and utility locations for the site of the Project, and a legal description of the site. The Contractor shall be entitled to rely on the accuracy of information furnished by the Owner but shall exercise proper precautions relating to the safe performance of the Work.

§ 2.3.5 The Owner shall furnish information or services required of the Owner by the Contract Documents with reasonable promptness. The Owner shall also furnish any other information or services under the Owner's control and relevant to the Contractor's performance of the Work with reasonable promptness after receiving the Contractor's written request for such information or services.

§ 2.3.6 Unless otherwise provided in the Contract Documents, the Owner shall furnish to the Contractor one copy of the Contract Documents for purposes of making reproductions pursuant to Section 1.5.2.

§ 2.4 Owner's Right to Stop the Work

If the Contractor fails to correct Work that is not in accordance with the requirements of the Contract Documents as required by Section 12.2 or repeatedly fails to carry out Work in accordance with the Contract Documents, the Owner may issue a written order to the Contractor to stop the Work, or any portion thereof, until the cause for such order has been eliminated; however, the right of the Owner to stop the Work shall not give rise to a duty on the part of the Owner to exercise this right for the benefit of the Contractor or any other person or entity, except to the extent required by Section 6.1.3.

§ 2.5 Owner's Right to Carry Out the Work

If the Contractor defaults or neglects to carry out the Work in accordance with the Contract Documents and fails within a ten-day period after receipt of notice from the Owner to commence and continue correction of such default or neglect with diligence and promptness, the Owner may, without prejudice to other remedies the Owner may have, correct such default or neglect. Such action by the Owner and amounts charged to the Contractor are both subject to prior approval of the Architect and the Architect may, pursuant to Section 9.5.1, withhold or nullify a Certificate for Payment in whole or in part, to the extent reasonably necessary to reimburse the Owner for the reasonable cost of correcting such deficiencies, including Owner's expenses and compensation for the Architect's additional services made necessary by such default, neglect, or failure. If current and future payments are not sufficient to cover such amounts, the Contractor shall pay the difference to the Owner. If the Contractor disagrees with the actions of the Owner or the Architect, or the amounts claimed as costs to the Owner, the Contractor may file a Claim pursuant to Article 15.

ARTICLE 3 CONTRACTOR

§ 3.1 General

§ 3.1.1 The Contractor is the person or entity identified as such in the Agreement and is referred to throughout the Contract Documents as if singular in number. The Contractor shall be lawfully licensed, if required in the jurisdiction where the Project is located. The Contractor shall designate in writing a representative who shall have express authority to bind the Contractor with respect to all matters under this Contract. The term "Contractor" means the Contractor or the Contractor's authorized representative.

§ 3.1.2 The Contractor shall perform the Work in accordance with the Contract Documents.

§ 3.1.3 The Contractor shall not be relieved of its obligations to perform the Work in accordance with the Contract Documents either by activities or duties of the Architect in the Architect's administration of the Contract, or by tests, inspections or approvals required or performed by persons or entities other than the Contractor.

§ 3.2 Review of Contract Documents and Field Conditions by Contractor

§ 3.2.1 Execution of the Contract by the Contractor is a representation that the Contractor has visited the site, become generally familiar with local conditions under which the Work is to be performed, and correlated personal observations with requirements of the Contract Documents.

SAMPLE

AIA Document A201™ – 2017. Copyright © 1911, 1915, 1918, 1925, 1937, 1951, 1958, 1961, 1963, 1966, 1970, 1976, 1987, 1997, 2007 and 2017 by The American Institute of Architects. **All rights reserved. WARNING: This AIA® Document is protected by U.S. Copyright Law and International Treaties. Unauthorized reproduction or distribution of this AIA® Document, or any portion of it, may result in severe civil and criminal penalties, and will be prosecuted to the maximum extent possible under the law.** This document was produced by AIA software at 08:34:20 ET on 11/19/2018 under Order No.5013131753 which expires on 10/31/2019, and is not for resale.
User Notes: (1799450219)

§ 3.2.2 Because the Contract Documents are complementary, the Contractor shall, before starting each portion of the Work, carefully study and compare the various Contract Documents relative to that portion of the Work, as well as the information furnished by the Owner pursuant to Section 2.3.4, shall take field measurements of any existing conditions related to that portion of the Work, and shall observe any conditions at the site affecting it. These obligations are for the purpose of facilitating coordination and construction by the Contractor and are not for the purpose of discovering errors, omissions, or inconsistencies in the Contract Documents; however, the Contractor shall promptly report to the Architect any errors, inconsistencies or omissions discovered by or made known to the Contractor as a request for information in such form as the Architect may require. It is recognized that the Contractor's review is made in the Contractor's capacity as a contractor and not as a licensed design professional, unless otherwise specifically provided in the Contract Documents.

§ 3.2.3 The Contractor is not required to ascertain that the Contract Documents are in accordance with applicable laws, statutes, ordinances, codes, rules and regulations, or lawful orders of public authorities, but the Contractor shall promptly report to the Architect any nonconformity discovered by or made known to the Contractor as a request for information in such form as the Architect may require.

§ 3.2.4 If the Contractor believes that additional cost or time is involved because of clarifications or instructions the Architect issues in response to the Contractor's notices or requests for information pursuant to Sections 3.2.2 or 3.2.3, the Contractor shall submit Claims as provided in Article 15. If the Contractor fails to perform the obligations of Sections 3.2.2 or 3.2.3, the Contractor shall pay such costs and damages to the Owner, subject to Section 15.1.7, as would have been avoided if the Contractor had performed such obligations. If the Contractor performs those obligations, the Contractor shall not be liable to the Owner or Architect for damages resulting from errors, inconsistencies or omissions in the Contract Documents, for differences between field measurements or conditions and the Contract Documents, or for nonconformities of the Contract Documents to applicable laws, statutes, ordinances, codes, rules and regulations, and lawful orders of public authorities.

SAMPLE

§ 3.3 Supervision and Construction Procedures

§ 3.3.1 The Contractor shall supervise and direct the Work, using the Contractor's best skill and attention. The Contractor shall be solely responsible for, and have control over, construction means, methods, techniques, sequences, and procedures, and for coordinating all portions of the Work under the Contract. If the Contract Documents give specific instructions concerning construction means, methods, techniques, sequences, or procedures, the Contractor shall evaluate the jobsite safety thereof and shall be solely responsible for the jobsite safety of such means, methods, techniques, sequences, or procedures. If the Contractor determines that such means, methods, techniques, sequences or procedures may not be safe, the Contractor shall give timely notice to the Owner and Architect, and shall propose alternative means, methods, techniques, sequences, or procedures. The Architect shall evaluate the proposed alternative solely for conformance with the design intent for the completed construction. Unless the Architect objects to the Contractor's proposed alternative, the Contractor shall perform the Work using its alternative means, methods, techniques, sequences, or procedures.

§ 3.3.2 The Contractor shall be responsible to the Owner for acts and omissions of the Contractor's employees, Subcontractors and their agents and employees, and other persons or entities performing portions of the Work for, or on behalf of, the Contractor or any of its Subcontractors.

§ 3.3.3 The Contractor shall be responsible for inspection of portions of Work already performed to determine that such portions are in proper condition to receive subsequent Work.

§ 3.4 Labor and Materials

§ 3.4.1 Unless otherwise provided in the Contract Documents, the Contractor shall provide and pay for labor, materials, equipment, tools, construction equipment and machinery, water, heat, utilities, transportation, and other facilities and services necessary for proper execution and completion of the Work, whether temporary or permanent and whether or not incorporated or to be incorporated in the Work.

§ 3.4.2 Except in the case of minor changes in the Work approved by the Architect in accordance with Section 3.12.8 or ordered by the Architect in accordance with Section 7.4, the Contractor may make substitutions only with the consent of the Owner, after evaluation by the Architect and in accordance with a Change Order or Construction Change Directive.

AIA Document A201™ – 2017. Copyright © 1911, 1915, 1918, 1925, 1937, 1951, 1958, 1961, 1963, 1966, 1970, 1976, 1987, 1997, 2007 and 2017 by The American Institute of Architects. **All rights reserved. WARNING: This AIA® Document is protected by U.S. Copyright Law and International Treaties. Unauthorized reproduction or distribution of this AIA® Document, or any portion of it, may result in severe civil and criminal penalties, and will be prosecuted to the maximum extent possible under the law.** This document was produced by AIA software at 08:34:20 ET on 11/19/2018 under Order No.5013131753 which expires on 10/31/2019, and is not for resale.
User Notes: (1799450219)

§ 3.4.3 The Contractor shall enforce strict discipline and good order among the Contractor's employees and other persons carrying out the Work. The Contractor shall not permit employment of unfit persons or persons not properly skilled in tasks assigned to them.

§ 3.5 Warranty

§ 3.5.1 The Contractor warrants to the Owner and Architect that materials and equipment furnished under the Contract will be of good quality and new unless the Contract Documents require or permit otherwise. The Contractor further warrants that the Work will conform to the requirements of the Contract Documents and will be free from defects, except for those inherent in the quality of the Work the Contract Documents require or permit. Work, materials, or equipment not conforming to these requirements may be considered defective. The Contractor's warranty excludes remedy for damage or defect caused by abuse, alterations to the Work not executed by the Contractor, improper or insufficient maintenance, improper operation, or normal wear and tear and normal usage. If required by the Architect, the Contractor shall furnish satisfactory evidence as to the kind and quality of materials and equipment.

§ 3.5.2 All material, equipment, or other special warranties required by the Contract Documents shall be issued in the name of the Owner, or shall be transferable to the Owner, and shall commence in accordance with Section 9.8.4.

§ 3.6 Taxes

The Contractor shall pay sales, consumer, use and similar taxes for the Work provided by the Contractor that are legally enacted when bids are received or negotiations concluded, whether or not yet effective or merely scheduled to go into effect.

§ 3.7 Permits, Fees, Notices and Compliance with Laws

§ 3.7.1 Unless otherwise provided in the Contract Documents, the Contractor shall secure and pay for the building permit as well as for other permits, fees, licenses, and inspections by government agencies necessary for proper execution and completion of the Work that are customarily secured after execution of the Contract and legally required at the time bids are received or negotiations concluded.

§ 3.7.2 The Contractor shall comply with and give notices required by applicable laws, statutes, ordinances, codes, rules and regulations, and lawful orders of public authorities applicable to performance of the Work.

§ 3.7.3 If the Contractor performs Work knowing it to be contrary to applicable laws, statutes, ordinances, codes, rules and regulations, or lawful orders of public authorities, the Contractor shall assume appropriate responsibility for such Work and shall bear the costs attributable to correction.

§ 3.7.4 Concealed or Unknown Conditions

If the Contractor encounters conditions at the site that are (1) subsurface or otherwise concealed physical conditions that differ materially from those indicated in the Contract Documents or (2) unknown physical conditions of an unusual nature that differ materially from those ordinarily found to exist and generally recognized as inherent in construction activities of the character provided for in the Contract Documents, the Contractor shall promptly provide notice to the Owner and the Architect before conditions are disturbed and in no event later than 14 days after first observance of the conditions. The Architect will promptly investigate such conditions and, if the Architect determines that they differ materially and cause an increase or decrease in the Contractor's cost of, or time required for, performance of any part of the Work, will recommend that an equitable adjustment be made in the Contract Sum or Contract Time, or both. If the Architect determines that the conditions at the site are not materially different from those indicated in the Contract Documents and that no change in the terms of the Contract is justified, the Architect shall promptly notify the Owner and Contractor, stating the reasons. If either party disputes the Architect's determination or recommendation, that party may submit a Claim as provided in Article 15.

§ 3.7.5 If, in the course of the Work, the Contractor encounters human remains or recognizes the existence of burial markers, archaeological sites or wetlands not indicated in the Contract Documents, the Contractor shall immediately suspend any operations that would affect them and shall notify the Owner and Architect. Upon receipt of such notice, the Owner shall promptly take any action necessary to obtain governmental authorization required to resume the operations. The Contractor shall continue to suspend such operations until otherwise instructed by the Owner but shall continue with all other operations that do not affect those remains or features. Requests for adjustments in the Contract Sum and Contract Time arising from the existence of such remains or features may be made as provided in Article 15.

SAMPLE

AIA Document A201™ – 2017. Copyright © 1911, 1915, 1918, 1925, 1937, 1951, 1958, 1961, 1963, 1966, 1970, 1976, 1987, 1997, 2007 and 2017 by The American Institute of Architects. **All rights reserved. WARNING: This AIA® Document is protected by U.S. Copyright Law and International Treaties. Unauthorized reproduction or distribution of this AIA® Document, or any portion of it, may result in severe civil and criminal penalties, and will be prosecuted to the maximum extent possible under the law.** This document was produced by AIA software at 08:34:20 ET on 11/19/2018 under Order No.5013131753 which expires on 10/31/2019, and is not for resale.
User Notes: (1799450219)

§ 3.8 Allowances

§ 3.8.1 The Contractor shall include in the Contract Sum all allowances stated in the Contract Documents. Items covered by allowances shall be supplied for such amounts and by such persons or entities as the Owner may direct, but the Contractor shall not be required to employ persons or entities to whom the Contractor has reasonable objection.

§ 3.8.2 Unless otherwise provided in the Contract Documents,

- **.1** allowances shall cover the cost to the Contractor of materials and equipment delivered at the site and all required taxes, less applicable trade discounts;
- **.2** Contractor's costs for unloading and handling at the site, labor, installation costs, overhead, profit, and other expenses contemplated for stated allowance amounts shall be included in the Contract Sum but not in the allowances; and
- **.3** whenever costs are more than or less than allowances, the Contract Sum shall be adjusted accordingly by Change Order. The amount of the Change Order shall reflect (1) the difference between actual costs and the allowances under Section 3.8.2.1 and (2) changes in Contractor's costs under Section 3.8.2.2.

§ 3.8.3 Materials and equipment under an allowance shall be selected by the Owner with reasonable promptness.

§ 3.9 Superintendent

§ 3.9.1 The Contractor shall employ a competent superintendent and necessary assistants who shall be in attendance at the Project site during performance of the Work. The superintendent shall represent the Contractor, and communications given to the superintendent shall be as binding as if given to the Contractor.

§ 3.9.2 The Contractor, as soon as practicable after award of the Contract, shall notify the Owner and Architect of the name and qualifications of a proposed superintendent. Within 14 days of receipt of the information, the Architect may notify the Contractor, stating whether the Owner or the Architect (1) has reasonable objection to the proposed superintendent or (2) requires additional time for review. Failure of the Architect to provide notice within the 14-day period shall constitute notice of no reasonable objection.

§ 3.9.3 The Contractor shall not employ a proposed superintendent to whom the Owner or Architect has made reasonable and timely objection. The Contractor shall not change the superintendent without the Owner's consent, which shall not unreasonably be withheld or delayed.

§ 3.10 Contractor's Construction and Submittal Schedules

§ 3.10.1 The Contractor, promptly after being awarded the Contract, shall submit for the Owner's and Architect's information a Contractor's construction schedule for the Work. The schedule shall contain detail appropriate for the Project, including (1) the date of commencement of the Work, interim schedule milestone dates, and the date of Substantial Completion; (2) an apportionment of the Work by construction activity; and (3) the time required for completion of each portion of the Work. The schedule shall provide for the orderly progression of the Work to completion and shall not exceed time limits current under the Contract Documents. The schedule shall be revised at appropriate intervals as required by the conditions of the Work and Project.

§ 3.10.2 The Contractor, promptly after being awarded the Contract and thereafter as necessary to maintain a current submittal schedule, shall submit a submittal schedule for the Architect's approval. The Architect's approval shall not be unreasonably delayed or withheld. The submittal schedule shall (1) be coordinated with the Contractor's construction schedule, and (2) allow the Architect reasonable time to review submittals. If the Contractor fails to submit a submittal schedule, or fails to provide submittals in accordance with the approved submittal schedule, the Contractor shall not be entitled to any increase in Contract Sum or extension of Contract Time based on the time required for review of submittals.

§ 3.10.3 The Contractor shall perform the Work in general accordance with the most recent schedules submitted to the Owner and Architect.

§ 3.11 Documents and Samples at the Site

The Contractor shall make available, at the Project site, the Contract Documents, including Change Orders, Construction Change Directives, and other Modifications, in good order and marked currently to indicate field changes and selections made during construction, and the approved Shop Drawings, Product Data, Samples, and similar required submittals. These shall be in electronic form or paper copy, available to the Architect and Owner, and

SAMPLE

AIA Document A201™ – 2017. Copyright © 1911, 1915, 1918, 1925, 1937, 1951, 1958, 1961, 1963, 1966, 1970, 1976, 1987, 1997, 2007 and 2017 by The American Institute of Architects. **All rights reserved. WARNING: This AIA® Document is protected by U.S. Copyright Law and International Treaties. Unauthorized reproduction or distribution of this AIA® Document, or any portion of it, may result in severe civil and criminal penalties, and will be prosecuted to the maximum extent possible under the law.** This document was produced by AIA software at 08:34:20 ET on 11/19/2018 under Order No.5013131753 which expires on 10/31/2019, and is not for resale.
User Notes:

(1799450219)

delivered to the Architect for submittal to the Owner upon completion of the Work as a record of the Work as constructed.

§ 3.12 Shop Drawings, Product Data and Samples

§ 3.12.1 Shop Drawings are drawings, diagrams, schedules, and other data specially prepared for the Work by the Contractor or a Subcontractor, Sub-subcontractor, manufacturer, supplier, or distributor to illustrate some portion of the Work.

§ 3.12.2 Product Data are illustrations, standard schedules, performance charts, instructions, brochures, diagrams, and other information furnished by the Contractor to illustrate materials or equipment for some portion of the Work.

§ 3.12.3 Samples are physical examples that illustrate materials, equipment, or workmanship, and establish standards by which the Work will be judged.

§ 3.12.4 Shop Drawings, Product Data, Samples, and similar submittals are not Contract Documents. Their purpose is to demonstrate how the Contractor proposes to conform to the information given and the design concept expressed in the Contract Documents for those portions of the Work for which the Contract Documents require submittals. Review by the Architect is subject to the limitations of Section 4.2.7. Informational submittals upon which the Architect is not expected to take responsive action may be so identified in the Contract Documents. Submittals that are not required by the Contract Documents may be returned by the Architect without action.

§ 3.12.5 The Contractor shall review for compliance with the Contract Documents, approve, and submit to the Architect, Shop Drawings, Product Data, Samples, and similar submittals required by the Contract Documents, in accordance with the submittal schedule approved by the Architect or, in the absence of an approved submittal schedule, with reasonable promptness and in such sequence as to cause no delay in the Work or in the activities of the Owner or of Separate Contractors.

§ 3.12.6 By submitting Shop Drawings, Product Data, Samples, and similar submittals, the Contractor represents to the Owner and Architect that the Contractor has (1) reviewed and approved them, (2) determined and verified materials, field measurements and field construction criteria related thereto, or will do so, and (3) checked and coordinated the information contained within such submittals with the requirements of the Work and of the Contract Documents.

§ 3.12.7 The Contractor shall perform no portion of the Work for which the Contract Documents require submittal and review of Shop Drawings, Product Data, Samples, or similar submittals, until the respective submittal has been approved by the Architect.

§ 3.12.8 The Work shall be in accordance with approved submittals except that the Contractor shall not be relieved of responsibility for deviations from the requirements of the Contract Documents by the Architect's approval of Shop Drawings, Product Data, Samples, or similar submittals, unless the Contractor has specifically notified the Architect of such deviation at the time of submittal and (1) the Architect has given written approval to the specific deviation as a minor change in the Work, or (2) a Change Order or Construction Change Directive has been issued authorizing the deviation. The Contractor shall not be relieved of responsibility for errors or omissions in Shop Drawings, Product Data, Samples, or similar submittals, by the Architect's approval thereof.

§ 3.12.9 The Contractor shall direct specific attention, in writing or on resubmitted Shop Drawings, Product Data, Samples, or similar submittals, to revisions other than those requested by the Architect on previous submittals. In the absence of such notice, the Architect's approval of a resubmission shall not apply to such revisions.

§ 3.12.10 The Contractor shall not be required to provide professional services that constitute the practice of architecture or engineering unless such services are specifically required by the Contract Documents for a portion of the Work or unless the Contractor needs to provide such services in order to carry out the Contractor's responsibilities for construction means, methods, techniques, sequences, and procedures. The Contractor shall not be required to provide professional services in violation of applicable law.

§ 3.12.10.1 If professional design services or certifications by a design professional related to systems, materials, or equipment are specifically required of the Contractor by the Contract Documents, the Owner and the Architect will specify all performance and design criteria that such services must satisfy. The Contractor shall be entitled to rely

SAMPLE

AIA Document A201™ – 2017. Copyright © 1911, 1915, 1918, 1925, 1937, 1951, 1958, 1961, 1963, 1966, 1970, 1976, 1987, 1997, 2007 and 2017 by The American Institute of Architects. **All rights reserved. WARNING: This AIA® Document is protected by U.S. Copyright Law and International Treaties. Unauthorized reproduction or distribution of this AIA® Document, or any portion of it, may result in severe civil and criminal penalties, and will be prosecuted to the maximum extent possible under the law.** This document was produced by AIA software at 08:34:20 ET on 11/19/2018 under Order No.5013131753 which expires on 10/31/2019, and is not for resale.
User Notes: (1799450219)

upon the adequacy and accuracy of the performance and design criteria provided in the Contract Documents. The Contractor shall cause such services or certifications to be provided by an appropriately licensed design professional, whose signature and seal shall appear on all drawings, calculations, specifications, certifications, Shop Drawings, and other submittals prepared by such professional. Shop Drawings, and other submittals related to the Work, designed or certified by such professional, if prepared by others, shall bear such professional's written approval when submitted to the Architect. The Owner and the Architect shall be entitled to rely upon the adequacy and accuracy of the services, certifications, and approvals performed or provided by such design professionals, provided the Owner and Architect have specified to the Contractor the performance and design criteria that such services must satisfy. Pursuant to this Section 3.12.10, the Architect will review and approve or take other appropriate action on submittals only for the limited purpose of checking for conformance with information given and the design concept expressed in the Contract Documents.

§ 3.12.10.2 If the Contract Documents require the Contractor's design professional to certify that the Work has been performed in accordance with the design criteria, the Contractor shall furnish such certifications to the Architect at the time and in the form specified by the Architect.

§ 3.13 Use of Site

The Contractor shall confine operations at the site to areas permitted by applicable laws, statutes, ordinances, codes, rules and regulations, lawful orders of public authorities, and the Contract Documents and shall not unreasonably encumber the site with materials or equipment.

§ 3.14 Cutting and Patching

§ 3.14.1 The Contractor shall be responsible for cutting, fitting, or patching required to complete the Work or to make its parts fit together properly. All areas requiring cutting, fitting, or patching shall be restored to the condition existing prior to the cutting, fitting, or patching, unless otherwise required by the Contract Documents.

§ 3.14.2 The Contractor shall not damage or endanger a portion of the Work or fully or partially completed construction of the Owner or Separate Contractors by cutting, patching, or otherwise altering such construction, or by excavation. The Contractor shall not cut or otherwise alter construction by the Owner or a Separate Contractor except with written consent of the Owner and of the Separate Contractor. Consent shall not be unreasonably withheld. The Contractor shall not unreasonably withhold, from the Owner or a Separate Contractor, its consent to cutting or otherwise altering the Work.

§ 3.15 Cleaning Up

§ 3.15.1 The Contractor shall keep the premises and surrounding area free from accumulation of waste materials and rubbish caused by operations under the Contract. At completion of the Work, the Contractor shall remove waste materials, rubbish, the Contractor's tools, construction equipment, machinery, and surplus materials from and about the Project.

§ 3.15.2 If the Contractor fails to clean up as provided in the Contract Documents, the Owner may do so and the Owner shall be entitled to reimbursement from the Contractor.

§ 3.16 Access to Work

The Contractor shall provide the Owner and Architect with access to the Work in preparation and progress wherever located.

§ 3.17 Royalties, Patents and Copyrights

The Contractor shall pay all royalties and license fees. The Contractor shall defend suits or claims for infringement of copyrights and patent rights and shall hold the Owner and Architect harmless from loss on account thereof, but shall not be responsible for defense or loss when a particular design, process, or product of a particular manufacturer or manufacturers is required by the Contract Documents, or where the copyright violations are contained in Drawings, Specifications, or other documents prepared by the Owner or Architect. However, if an infringement of a copyright or patent is discovered by, or made known to, the Contractor, the Contractor shall be responsible for the loss unless the information is promptly furnished to the Architect.

SAMPLE

AIA Document A201™ – 2017. Copyright © 1911, 1915, 1918, 1925, 1937, 1951, 1958, 1961, 1963, 1966, 1970, 1976, 1987, 1997, 2007 and 2017 by The American Institute of Architects. **All rights reserved. WARNING: This AIA® Document is protected by U.S. Copyright Law and International Treaties. Unauthorized reproduction or distribution of this AIA® Document, or any portion of it, may result in severe civil and criminal penalties, and will be prosecuted to the maximum extent possible under the law.** This document was produced by AIA software at 08:34:20 ET on 11/19/2018 under Order No.5013131753 which expires on 10/31/2019, and is not for resale.
User Notes:

(1799450219)

§ 3.18 Indemnification

§ 3.18.1 To the fullest extent permitted by law, the Contractor shall indemnify and hold harmless the Owner, Architect, Architect's consultants, and agents and employees of any of them from and against claims, damages, losses, and expenses, including but not limited to attorneys' fees, arising out of or resulting from performance of the Work, provided that such claim, damage, loss, or expense is attributable to bodily injury, sickness, disease or death, or to injury to or destruction of tangible property (other than the Work itself), but only to the extent caused by the negligent acts or omissions of the Contractor, a Subcontractor, anyone directly or indirectly employed by them, or anyone for whose acts they may be liable, regardless of whether or not such claim, damage, loss, or expense is caused in part by a party indemnified hereunder. Such obligation shall not be construed to negate, abridge, or reduce other rights or obligations of indemnity that would otherwise exist as to a party or person described in this Section 3.18.

§ 3.18.2 In claims against any person or entity indemnified under this Section 3.18 by an employee of the Contractor, a Subcontractor, anyone directly or indirectly employed by them, or anyone for whose acts they may be liable, the indemnification obligation under Section 3.18.1 shall not be limited by a limitation on amount or type of damages, compensation, or benefits payable by or for the Contractor or a Subcontractor under workers' compensation acts, disability benefit acts, or other employee benefit acts.

ARTICLE 4 ARCHITECT

§ 4.1 General

§ 4.1.1 The Architect is the person or entity retained by the Owner pursuant to Section 2.3.2 and identified as such in the Agreement.

§ 4.1.2 Duties, responsibilities, and limitations of authority of the Architect as set forth in the Contract Documents shall not be restricted, modified, or extended without written consent of the Owner, Contractor, and Architect. Consent shall not be unreasonably withheld.

§ 4.2 Administration of the Contract

§ 4.2.1 The Architect will provide administration of the Contract as described in the Contract Documents and will be an Owner's representative during construction until the date the Architect issues the final Certificate for Payment. The Architect will have authority to act on behalf of the Owner only to the extent provided in the Contract Documents.

§ 4.2.2 The Architect will visit the site at intervals appropriate to the stage of construction, or as otherwise agreed with the Owner, to become generally familiar with the progress and quality of the portion of the Work completed, and to determine in general if the Work observed is being performed in a manner indicating that the Work, when fully completed, will be in accordance with the Contract Documents. However, the Architect will not be required to make exhaustive or continuous on-site inspections to check the quality or quantity of the Work. The Architect will not have control over, charge of, or responsibility for the construction means, methods, techniques, sequences or procedures, or for the safety precautions and programs in connection with the Work, since these are solely the Contractor's rights and responsibilities under the Contract Documents.

§ 4.2.3 On the basis of the site visits, the Architect will keep the Owner reasonably informed about the progress and quality of the portion of the Work completed, and promptly report to the Owner (1) known deviations from the Contract Documents, (2) known deviations from the most recent construction schedule submitted by the Contractor, and (3) defects and deficiencies observed in the Work. The Architect will not be responsible for the Contractor's failure to perform the Work in accordance with the requirements of the Contract Documents. The Architect will not have control over or charge of, and will not be responsible for acts or omissions of, the Contractor, Subcontractors, or their agents or employees, or any other persons or entities performing portions of the Work.

§ 4.2.4 Communications

The Owner and Contractor shall include the Architect in all communications that relate to or affect the Architect's services or professional responsibilities. The Owner shall promptly notify the Architect of the substance of any direct communications between the Owner and the Contractor otherwise relating to the Project. Communications by and with the Architect's consultants shall be through the Architect. Communications by and with Subcontractors and suppliers shall be through the Contractor. Communications by and with Separate Contractors shall be through the Owner. The Contract Documents may specify other communication protocols.

SAMPLE

AIA Document A201™ – 2017. Copyright © 1911, 1915, 1918, 1925, 1937, 1951, 1958, 1961, 1963, 1966, 1970, 1976, 1987, 1997, 2007 and 2017 by The American Institute of Architects. **All rights reserved. WARNING: This AIA® Document is protected by U.S. Copyright Law and International Treaties. Unauthorized reproduction or distribution of this AIA® Document, or any portion of it, may result in severe civil and criminal penalties, and will be prosecuted to the maximum extent possible under the law.** This document was produced by AIA software at 08:34:20 ET on 11/19/2018 under Order No.5013131753 which expires on 10/31/2019, and is not for resale.
User Notes:

(1799450219)

§ 4.2.5 Based on the Architect's evaluations of the Contractor's Applications for Payment, the Architect will review and certify the amounts due the Contractor and will issue Certificates for Payment in such amounts.

§ 4.2.6 The Architect has authority to reject Work that does not conform to the Contract Documents. Whenever the Architect considers it necessary or advisable, the Architect will have authority to require inspection or testing of the Work in accordance with Sections 13.4.2 and 13.4.3, whether or not the Work is fabricated, installed or completed. However, neither this authority of the Architect nor a decision made in good faith either to exercise or not to exercise such authority shall give rise to a duty or responsibility of the Architect to the Contractor, Subcontractors, suppliers, their agents or employees, or other persons or entities performing portions of the Work.

§ 4.2.7 The Architect will review and approve, or take other appropriate action upon, the Contractor's submittals such as Shop Drawings, Product Data, and Samples, but only for the limited purpose of checking for conformance with information given and the design concept expressed in the Contract Documents. The Architect's action will be taken in accordance with the submittal schedule approved by the Architect or, in the absence of an approved submittal schedule, with reasonable promptness while allowing sufficient time in the Architect's professional judgment to permit adequate review. Review of such submittals is not conducted for the purpose of determining the accuracy and completeness of other details such as dimensions and quantities, or for substantiating instructions for installation or performance of equipment or systems, all of which remain the responsibility of the Contractor as required by the Contract Documents. The Architect's review of the Contractor's submittals shall not relieve the Contractor of the obligations under Sections 3.3, 3.5, and 3.12. The Architect's review shall not constitute approval of safety precautions or of any construction means, methods, techniques, sequences, or procedures. The Architect's approval of a specific item shall not indicate approval of an assembly of which the item is a component.

§ 4.2.8 The Architect will prepare Change Orders and Construction Change Directives, and may order minor changes in the Work as provided in Section 7.4. The Architect will investigate and make determinations and recommendations regarding concealed and unknown conditions as provided in Section 3.7.4.

§ 4.2.9 The Architect will conduct inspections to determine the date or dates of Substantial Completion and the date of final completion; issue Certificates of Substantial Completion pursuant to Section 9.8; receive and forward to the Owner, for the Owner's review and records, written warranties and related documents required by the Contract and assembled by the Contractor pursuant to Section 9.10; and issue a final Certificate for Payment pursuant to Section 9.10.

§ 4.2.10 If the Owner and Architect agree, the Architect will provide one or more Project representatives to assist in carrying out the Architect's responsibilities at the site. The Owner shall notify the Contractor of any change in the duties, responsibilities and limitations of authority of the Project representatives.

§ 4.2.11 The Architect will interpret and decide matters concerning performance under, and requirements of, the Contract Documents on written request of either the Owner or Contractor. The Architect's response to such requests will be made in writing within any time limits agreed upon or otherwise with reasonable promptness.

§ 4.2.12 Interpretations and decisions of the Architect will be consistent with the intent of, and reasonably inferable from, the Contract Documents and will be in writing or in the form of drawings. When making such interpretations and decisions, the Architect will endeavor to secure faithful performance by both Owner and Contractor, will not show partiality to either, and will not be liable for results of interpretations or decisions rendered in good faith.

§ 4.2.13 The Architect's decisions on matters relating to aesthetic effect will be final if consistent with the intent expressed in the Contract Documents.

§ 4.2.14 The Architect will review and respond to requests for information about the Contract Documents. The Architect's response to such requests will be made in writing within any time limits agreed upon or otherwise with reasonable promptness. If appropriate, the Architect will prepare and issue supplemental Drawings and Specifications in response to the requests for information.

SAMPLE

AIA Document A201™ – 2017. Copyright © 1911, 1915, 1918, 1925, 1937, 1951, 1958, 1961, 1963, 1966, 1970, 1976, 1987, 1997, 2007 and 2017 by The American Institute of Architects. **All rights reserved. WARNING: This AIA® Document is protected by U.S. Copyright Law and International Treaties. Unauthorized reproduction or distribution of this AIA® Document, or any portion of it, may result in severe civil and criminal penalties, and will be prosecuted to the maximum extent possible under the law.** This document was produced by AIA software at 08:34:20 ET on 11/19/2018 under Order No.5013131753 which expires on 10/31/2019, and is not for resale.
User Notes:

(1799450219)

ARTICLE 5 SUBCONTRACTORS

§ 5.1 Definitions

§ 5.1.1 A Subcontractor is a person or entity who has a direct contract with the Contractor to perform a portion of the Work at the site. The term "Subcontractor" is referred to throughout the Contract Documents as if singular in number and means a Subcontractor or an authorized representative of the Subcontractor. The term "Subcontractor" does not include a Separate Contractor or the subcontractors of a Separate Contractor.

§ 5.1.2 A Sub-subcontractor is a person or entity who has a direct or indirect contract with a Subcontractor to perform a portion of the Work at the site. The term "Sub-subcontractor" is referred to throughout the Contract Documents as if singular in number and means a Sub-subcontractor or an authorized representative of the Sub-subcontractor.

§ 5.2 Award of Subcontracts and Other Contracts for Portions of the Work

§ 5.2.1 Unless otherwise stated in the Contract Documents, the Contractor, as soon as practicable after award of the Contract, shall notify the Owner and Architect of the persons or entities proposed for each principal portion of the Work, including those who are to furnish materials or equipment fabricated to a special design. Within 14 days of receipt of the information, the Architect may notify the Contractor whether the Owner or the Architect (1) has reasonable objection to any such proposed person or entity or (2) requires additional time for review. Failure of the Architect to provide notice within the 14-day period shall constitute notice of no reasonable objection.

§ 5.2.2 The Contractor shall not contract with a proposed person or entity to whom the Owner or Architect has made reasonable and timely objection. The Contractor shall not be required to contract with anyone to whom the Contractor has made reasonable objection.

§ 5.2.3 If the Owner or Architect has reasonable objection to a person or entity proposed by the Contractor, the Contractor shall propose another to whom the Owner or Architect has no reasonable objection. If the proposed but rejected Subcontractor was reasonably capable of performing the Work, the Contract Sum and Contract Time shall be increased or decreased by the difference, if any, occasioned by such change, and an appropriate Change Order shall be issued before commencement of the substitute Subcontractor's Work. However, no increase in the Contract Sum or Contract Time shall be allowed for such change unless the Contractor has acted promptly and responsively in submitting names as required.

§ 5.2.4 The Contractor shall not substitute a Subcontractor, person, or entity for one previously selected if the Owner or Architect makes reasonable objection to such substitution.

§ 5.3 Subcontractual Relations

By appropriate written agreement, the Contractor shall require each Subcontractor, to the extent of the Work to be performed by the Subcontractor, to be bound to the Contractor by terms of the Contract Documents, and to assume toward the Contractor all the obligations and responsibilities, including the responsibility for safety of the Subcontractor's Work that the Contractor, by these Contract Documents, assumes toward the Owner and Architect. Each subcontract agreement shall preserve and protect the rights of the Owner and Architect under the Contract Documents with respect to the Work to be performed by the Subcontractor so that subcontracting thereof will not prejudice such rights, and shall allow to the Subcontractor, unless specifically provided otherwise in the subcontract agreement, the benefit of all rights, remedies, and redress against the Contractor that the Contractor, by the Contract Documents, has against the Owner. Where appropriate, the Contractor shall require each Subcontractor to enter into similar agreements with Sub-subcontractors. The Contractor shall make available to each proposed Subcontractor, prior to the execution of the subcontract agreement, copies of the Contract Documents to which the Subcontractor will be bound, and, upon written request of the Subcontractor, identify to the Subcontractor terms and conditions of the proposed subcontract agreement that may be at variance with the Contract Documents. Subcontractors will similarly make copies of applicable portions of such documents available to their respective proposed Sub-subcontractors.

§ 5.4 Contingent Assignment of Subcontracts

§ 5.4.1 Each subcontract agreement for a portion of the Work is assigned by the Contractor to the Owner, provided that

- **.1** assignment is effective only after termination of the Contract by the Owner for cause pursuant to Section 14.2 and only for those subcontract agreements that the Owner accepts by notifying the Subcontractor and Contractor; and
- **.2** assignment is subject to the prior rights of the surety, if any, obligated under bond relating to the Contract.

SAMPLE

AIA Document A201™ – 2017. Copyright © 1911, 1915, 1918, 1925, 1937, 1951, 1958, 1961, 1963, 1966, 1970, 1976, 1987, 1997, 2007 and 2017 by The American Institute of Architects. **All rights reserved. WARNING: This AIA® Document is protected by U.S. Copyright Law and International Treaties. Unauthorized reproduction or distribution of this AIA® Document, or any portion of it, may result in severe civil and criminal penalties, and will be prosecuted to the maximum extent possible under the law.** This document was produced by AIA software at 08:34:20 ET on 11/19/2018 under Order No.5013131753 which expires on 10/31/2019, and is not for resale.
User Notes: (1799450219)

When the Owner accepts the assignment of a subcontract agreement, the Owner assumes the Contractor's rights and obligations under the subcontract.

§ 5.4.2 Upon such assignment, if the Work has been suspended for more than 30 days, the Subcontractor's compensation shall be equitably adjusted for increases in cost resulting from the suspension.

§ 5.4.3 Upon assignment to the Owner under this Section 5.4, the Owner may further assign the subcontract to a successor contractor or other entity. If the Owner assigns the subcontract to a successor contractor or other entity, the Owner shall nevertheless remain legally responsible for all of the successor contractor's obligations under the subcontract.

ARTICLE 6 CONSTRUCTION BY OWNER OR BY SEPARATE CONTRACTORS

§ 6.1 Owner's Right to Perform Construction and to Award Separate Contracts

§ 6.1.1 The term "Separate Contractor(s)" shall mean other contractors retained by the Owner under separate agreements. The Owner reserves the right to perform construction or operations related to the Project with the Owner's own forces, and with Separate Contractors retained under Conditions of the Contract substantially similar to those of this Contract, including those provisions of the Conditions of the Contract related to insurance and waiver of subrogation.

§ 6.1.2 When separate contracts are awarded for different portions of the Project or other construction or operations on the site, the term "Contractor" in the Contract Documents in each case shall mean the Contractor who executes each separate Owner-Contractor Agreement.

§ 6.1.3 The Owner shall provide for coordination of the activities of the Owner's own forces and of each Separate Contractor with the Work of the Contractor, who shall cooperate with them. The Contractor shall participate with any Separate Contractors and the Owner in reviewing their construction schedules. The Contractor shall make any revisions to its construction schedule deemed necessary after a joint review and mutual agreement. The construction schedules shall then constitute the schedules to be used by the Contractor, Separate Contractors, and the Owner until subsequently revised.

§ 6.1.4 Unless otherwise provided in the Contract Documents, when the Owner performs construction or operations related to the Project with the Owner's own forces or with Separate Contractors, the Owner or its Separate Contractors shall have the same obligations and rights that the Contractor has under the Conditions of the Contract, including, without excluding others, those stated in Article 3, this Article 6, and Articles 10, 11, and 12.

§ 6.2 Mutual Responsibility

§ 6.2.1 The Contractor shall afford the Owner and Separate Contractors reasonable opportunity for introduction and storage of their materials and equipment and performance of their activities, and shall connect and coordinate the Contractor's construction and operations with theirs as required by the Contract Documents.

§ 6.2.2 If part of the Contractor's Work depends for proper execution or results upon construction or operations by the Owner or a Separate Contractor, the Contractor shall, prior to proceeding with that portion of the Work, promptly notify the Architect of apparent discrepancies or defects in the construction or operations by the Owner or Separate Contractor that would render it unsuitable for proper execution and results of the Contractor's Work. Failure of the Contractor to notify the Architect of apparent discrepancies or defects prior to proceeding with the Work shall constitute an acknowledgment that the Owner's or Separate Contractor's completed or partially completed construction is fit and proper to receive the Contractor's Work. The Contractor shall not be responsible for discrepancies or defects in the construction or operations by the Owner or Separate Contractor that are not apparent.

§ 6.2.3 The Contractor shall reimburse the Owner for costs the Owner incurs that are payable to a Separate Contractor because of the Contractor's delays, improperly timed activities or defective construction. The Owner shall be responsible to the Contractor for costs the Contractor incurs because of a Separate Contractor's delays, improperly timed activities, damage to the Work or defective construction.

§ 6.2.4 The Contractor shall promptly remedy damage that the Contractor wrongfully causes to completed or partially completed construction or to property of the Owner or Separate Contractor as provided in Section 10.2.5.

SAMPLE

AIA Document A201™ – 2017. Copyright © 1911, 1915, 1918, 1925, 1937, 1951, 1958, 1961, 1963, 1966, 1970, 1976, 1987, 1997, 2007 and 2017 by The American Institute of Architects. **All rights reserved. WARNING: This AIA® Document is protected by U.S. Copyright Law and International Treaties. Unauthorized reproduction or distribution of this AIA® Document, or any portion of it, may result in severe civil and criminal penalties, and will be prosecuted to the maximum extent possible under the law.** This document was produced by AIA software at 08:34:20 ET on 11/19/2018 under Order No.5013131753 which expires on 10/31/2019, and is not for resale.
User Notes:

§ 6.2.5 The Owner and each Separate Contractor shall have the same responsibilities for cutting and patching as are described for the Contractor in Section 3.14.

§ 6.3 Owner's Right to Clean Up

If a dispute arises among the Contractor, Separate Contractors, and the Owner as to the responsibility under their respective contracts for maintaining the premises and surrounding area free from waste materials and rubbish, the Owner may clean up and the Architect will allocate the cost among those responsible.

ARTICLE 7 CHANGES IN THE WORK

§ 7.1 General

§ 7.1.1 Changes in the Work may be accomplished after execution of the Contract, and without invalidating the Contract, by Change Order, Construction Change Directive or order for a minor change in the Work, subject to the limitations stated in this Article 7 and elsewhere in the Contract Documents.

§ 7.1.2 A Change Order shall be based upon agreement among the Owner, Contractor, and Architect. A Construction Change Directive requires agreement by the Owner and Architect and may or may not be agreed to by the Contractor. An order for a minor change in the Work may be issued by the Architect alone.

§ 7.1.3 Changes in the Work shall be performed under applicable provisions of the Contract Documents. The Contractor shall proceed promptly with changes in the Work, unless otherwise provided in the Change Order, Construction Change Directive, or order for a minor change in the Work.

§ 7.2 Change Orders

§ 7.2.1 A Change Order is a written instrument prepared by the Architect and signed by the Owner, Contractor, and Architect stating their agreement upon all of the following:

- **.1** The change in the Work;
- **.2** The amount of the adjustment, if any, in the Contract Sum; and
- **.3** The extent of the adjustment, if any, in the Contract Time.

§ 7.3 Construction Change Directives

§ 7.3.1 A Construction Change Directive is a written order prepared by the Architect and signed by the Owner and Architect, directing a change in the Work prior to agreement on adjustment, if any, in the Contract Sum or Contract Time, or both. The Owner may by Construction Change Directive, without invalidating the Contract, order changes in the Work within the general scope of the Contract consisting of additions, deletions, or other revisions, the Contract Sum and Contract Time being adjusted accordingly.

§ 7.3.2 A Construction Change Directive shall be used in the absence of total agreement on the terms of a Change Order.

§ 7.3.3 If the Construction Change Directive provides for an adjustment to the Contract Sum, the adjustment shall be based on one of the following methods:

- **.1** Mutual acceptance of a lump sum properly itemized and supported by sufficient substantiating data to permit evaluation;
- **.2** Unit prices stated in the Contract Documents or subsequently agreed upon;
- **.3** Cost to be determined in a manner agreed upon by the parties and a mutually acceptable fixed or percentage fee; or
- **.4** As provided in Section 7.3.4.

§ 7.3.4 If the Contractor does not respond promptly or disagrees with the method for adjustment in the Contract Sum, the Architect shall determine the adjustment on the basis of reasonable expenditures and savings of those performing the Work attributable to the change, including, in case of an increase in the Contract Sum, an amount for overhead and profit as set forth in the Agreement, or if no such amount is set forth in the Agreement, a reasonable amount. In such case, and also under Section 7.3.3.3, the Contractor shall keep and present, in such form as the Architect may prescribe, an itemized accounting together with appropriate supporting data. Unless otherwise provided in the Contract Documents, costs for the purposes of this Section 7.3.4 shall be limited to the following:

SAMPLE

AIA Document A201™ – 2017. Copyright © 1911, 1915, 1918, 1925, 1937, 1951, 1958, 1961, 1963, 1966, 1970, 1976, 1987, 1997, 2007 and 2017 by The American Institute of Architects. **All rights reserved. WARNING: This AIA® Document is protected by U.S. Copyright Law and International Treaties. Unauthorized reproduction or distribution of this AIA® Document, or any portion of it, may result in severe civil and criminal penalties, and will be prosecuted to the maximum extent possible under the law.** This document was produced by AIA software at 08:34:20 ET on 11/19/2018 under Order No.5013131753 which expires on 10/31/2019, and is not for resale.
User Notes: (1799450219)

.1 Costs of labor, including applicable payroll taxes, fringe benefits required by agreement or custom, workers' compensation insurance, and other employee costs approved by the Architect;
.2 Costs of materials, supplies, and equipment, including cost of transportation, whether incorporated or consumed;
.3 Rental costs of machinery and equipment, exclusive of hand tools, whether rented from the Contractor or others;
.4 Costs of premiums for all bonds and insurance, permit fees, and sales, use, or similar taxes, directly related to the change; and
.5 Costs of supervision and field office personnel directly attributable to the change.

§ 7.3.5 If the Contractor disagrees with the adjustment in the Contract Time, the Contractor may make a Claim in accordance with applicable provisions of Article 15.

§ 7.3.6 Upon receipt of a Construction Change Directive, the Contractor shall promptly proceed with the change in the Work involved and advise the Architect of the Contractor's agreement or disagreement with the method, if any, provided in the Construction Change Directive for determining the proposed adjustment in the Contract Sum or Contract Time.

§ 7.3.7 A Construction Change Directive signed by the Contractor indicates the Contractor's agreement therewith, including adjustment in Contract Sum and Contract Time or the method for determining them. Such agreement shall be effective immediately and shall be recorded as a Change Order.

§ 7.3.8 The amount of credit to be allowed by the Contractor to the Owner for a deletion or change that results in a net decrease in the Contract Sum shall be actual net cost as confirmed by the Architect. When both additions and credits covering related Work or substitutions are involved in a change, the allowance for overhead and profit shall be figured on the basis of net increase, if any, with respect to that change.

§ 7.3.9 Pending final determination of the total cost of a Construction Change Directive to the Owner, the Contractor may request payment for Work completed under the Construction Change Directive in Applications for Payment. The Architect will make an interim determination for purposes of monthly certification for payment for those costs and certify for payment the amount that the Architect determines, in the Architect's professional judgment, to be reasonably justified. The Architect's interim determination of cost shall adjust the Contract Sum on the same basis as a Change Order, subject to the right of either party to disagree and assert a Claim in accordance with Article 15.

§ 7.3.10 When the Owner and Contractor agree with a determination made by the Architect concerning the adjustments in the Contract Sum and Contract Time, or otherwise reach agreement upon the adjustments, such agreement shall be effective immediately and the Architect will prepare a Change Order. Change Orders may be issued for all or any part of a Construction Change Directive.

§ 7.4 Minor Changes in the Work

The Architect may order minor changes in the Work that are consistent with the intent of the Contract Documents and do not involve an adjustment in the Contract Sum or an extension of the Contract Time. The Architect's order for minor changes shall be in writing. If the Contractor believes that the proposed minor change in the Work will affect the Contract Sum or Contract Time, the Contractor shall notify the Architect and shall not proceed to implement the change in the Work. If the Contractor performs the Work set forth in the Architect's order for a minor change without prior notice to the Architect that such change will affect the Contract Sum or Contract Time, the Contractor waives any adjustment to the Contract Sum or extension of the Contract Time.

ARTICLE 8 TIME

§ 8.1 Definitions

§ 8.1.1 Unless otherwise provided, Contract Time is the period of time, including authorized adjustments, allotted in the Contract Documents for Substantial Completion of the Work.

§ 8.1.2 The date of commencement of the Work is the date established in the Agreement.

§ 8.1.3 The date of Substantial Completion is the date certified by the Architect in accordance with Section 9.8.

SAMPLE

AIA Document A201™ – 2017. Copyright © 1911, 1915, 1918, 1925, 1937, 1951, 1958, 1961, 1963, 1966, 1970, 1976, 1987, 1997, 2007 and 2017 by The American Institute of Architects. **All rights reserved. WARNING: This AIA® Document is protected by U.S. Copyright Law and International Treaties. Unauthorized reproduction or distribution of this AIA® Document, or any portion of it, may result in severe civil and criminal penalties, and will be prosecuted to the maximum extent possible under the law.** This document was produced by AIA software at 08:34:20 ET on 11/19/2018 under Order No.5013131753 which expires on 10/31/2019, and is not for resale.
User Notes: (1799450219)

§ 8.1.4 The term "day" as used in the Contract Documents shall mean calendar day unless otherwise specifically defined.

§ 8.2 Progress and Completion

§ 8.2.1 Time limits stated in the Contract Documents are of the essence of the Contract. By executing the Agreement, the Contractor confirms that the Contract Time is a reasonable period for performing the Work.

§ 8.2.2 The Contractor shall not knowingly, except by agreement or instruction of the Owner in writing, commence the Work prior to the effective date of insurance required to be furnished by the Contractor and Owner.

§ 8.2.3 The Contractor shall proceed expeditiously with adequate forces and shall achieve Substantial Completion within the Contract Time.

§ 8.3 Delays and Extensions of Time

§ 8.3.1 If the Contractor is delayed at any time in the commencement or progress of the Work by (1) an act or neglect of the Owner or Architect, of an employee of either, or of a Separate Contractor; (2) by changes ordered in the Work; (3) by labor disputes, fire, unusual delay in deliveries, unavoidable casualties, adverse weather conditions documented in accordance with Section 15.1.6.2, or other causes beyond the Contractor's control; (4) by delay authorized by the Owner pending mediation and binding dispute resolution; or (5) by other causes that the Contractor asserts, and the Architect determines, justify delay, then the Contract Time shall be extended for such reasonable time as the Architect may determine.

§ 8.3.2 Claims relating to time shall be made in accordance with applicable provisions of Article 15.

§ 8.3.3 This Section 8.3 does not preclude recovery of damages for delay by either party under other provisions of the Contract Documents.

SAMPLE

ARTICLE 9 PAYMENTS AND COMPLETION

§ 9.1 Contract Sum

§ 9.1.1 The Contract Sum is stated in the Agreement and, including authorized adjustments, is the total amount payable by the Owner to the Contractor for performance of the Work under the Contract Documents.

§ 9.1.2 If unit prices are stated in the Contract Documents or subsequently agreed upon, and if quantities originally contemplated are materially changed so that application of such unit prices to the actual quantities causes substantial inequity to the Owner or Contractor, the applicable unit prices shall be equitably adjusted.

§ 9.2 Schedule of Values

Where the Contract is based on a stipulated sum or Guaranteed Maximum Price, the Contractor shall submit a schedule of values to the Architect before the first Application for Payment, allocating the entire Contract Sum to the various portions of the Work. The schedule of values shall be prepared in the form, and supported by the data to substantiate its accuracy, required by the Architect. This schedule, unless objected to by the Architect, shall be used as a basis for reviewing the Contractor's Applications for Payment. Any changes to the schedule of values shall be submitted to the Architect and supported by such data to substantiate its accuracy as the Architect may require, and unless objected to by the Architect, shall be used as a basis for reviewing the Contractor's subsequent Applications for Payment.

§ 9.3 Applications for Payment

§ 9.3.1 At least ten days before the date established for each progress payment, the Contractor shall submit to the Architect an itemized Application for Payment prepared in accordance with the schedule of values, if required under Section 9.2, for completed portions of the Work. The application shall be notarized, if required, and supported by all data substantiating the Contractor's right to payment that the Owner or Architect require, such as copies of requisitions, and releases and waivers of liens from Subcontractors and suppliers, and shall reflect retainage if provided for in the Contract Documents.

§ 9.3.1.1 As provided in Section 7.3.9, such applications may include requests for payment on account of changes in the Work that have been properly authorized by Construction Change Directives, or by interim determinations of the Architect, but not yet included in Change Orders.

AIA Document A201™ – 2017. Copyright © 1911, 1915, 1918, 1925, 1937, 1951, 1958, 1961, 1963, 1966, 1970, 1976, 1987, 1997, 2007 and 2017 by The American Institute of Architects. **All rights reserved. WARNING: This AIA® Document is protected by U.S. Copyright Law and International Treaties. Unauthorized reproduction or distribution of this AIA® Document, or any portion of it, may result in severe civil and criminal penalties, and will be prosecuted to the maximum extent possible under the law.** This document was produced by AIA software at 08:34:20 ET on 11/19/2018 under Order No.5013131753 which expires on 10/31/2019, and is not for resale.
User Notes: (1799450219)

§ 9.3.1.2 Applications for Payment shall not include requests for payment for portions of the Work for which the Contractor does not intend to pay a Subcontractor or supplier, unless such Work has been performed by others whom the Contractor intends to pay.

§ 9.3.2 Unless otherwise provided in the Contract Documents, payments shall be made on account of materials and equipment delivered and suitably stored at the site for subsequent incorporation in the Work. If approved in advance by the Owner, payment may similarly be made for materials and equipment suitably stored off the site at a location agreed upon in writing. Payment for materials and equipment stored on or off the site shall be conditioned upon compliance by the Contractor with procedures satisfactory to the Owner to establish the Owner's title to such materials and equipment or otherwise protect the Owner's interest, and shall include the costs of applicable insurance, storage, and transportation to the site, for such materials and equipment stored off the site.

§ 9.3.3 The Contractor warrants that title to all Work covered by an Application for Payment will pass to the Owner no later than the time of payment. The Contractor further warrants that upon submittal of an Application for Payment all Work for which Certificates for Payment have been previously issued and payments received from the Owner shall, to the best of the Contractor's knowledge, information, and belief, be free and clear of liens, claims, security interests, or encumbrances, in favor of the Contractor, Subcontractors, suppliers, or other persons or entities that provided labor, materials, and equipment relating to the Work.

§ 9.4 Certificates for Payment

§ 9.4.1 The Architect will, within seven days after receipt of the Contractor's Application for Payment, either (1) issue to the Owner a Certificate for Payment in the full amount of the Application for Payment, with a copy to the Contractor; or (2) issue to the Owner a Certificate for Payment for such amount as the Architect determines is properly due, and notify the Contractor and Owner of the Architect's reasons for withholding certification in part as provided in Section 9.5.1; or (3) withhold certification of the entire Application for Payment, and notify the Contractor and Owner of the Architect's reason for withholding certification in whole as provided in Section 9.5.1.

§ 9.4.2 The issuance of a Certificate for Payment will constitute a representation by the Architect to the Owner, based on the Architect's evaluation of the Work and the data in the Application for Payment, that, to the best of the Architect's knowledge, information, and belief, the Work has progressed to the point indicated, the quality of the Work is in accordance with the Contract Documents, and that the Contractor is entitled to payment in the amount certified. The foregoing representations are subject to an evaluation of the Work for conformance with the Contract Documents upon Substantial Completion, to results of subsequent tests and inspections, to correction of minor deviations from the Contract Documents prior to completion, and to specific qualifications expressed by the Architect. However, the issuance of a Certificate for Payment will not be a representation that the Architect has (1) made exhaustive or continuous on-site inspections to check the quality or quantity of the Work; (2) reviewed construction means, methods, techniques, sequences, or procedures; (3) reviewed copies of requisitions received from Subcontractors and suppliers and other data requested by the Owner to substantiate the Contractor's right to payment; or (4) made examination to ascertain how or for what purpose the Contractor has used money previously paid on account of the Contract Sum.

§ 9.5 Decisions to Withhold Certification

§ 9.5.1 The Architect may withhold a Certificate for Payment in whole or in part, to the extent reasonably necessary to protect the Owner, if in the Architect's opinion the representations to the Owner required by Section 9.4.2 cannot be made. If the Architect is unable to certify payment in the amount of the Application, the Architect will notify the Contractor and Owner as provided in Section 9.4.1. If the Contractor and Architect cannot agree on a revised amount, the Architect will promptly issue a Certificate for Payment for the amount for which the Architect is able to make such representations to the Owner. The Architect may also withhold a Certificate for Payment or, because of subsequently discovered evidence, may nullify the whole or a part of a Certificate for Payment previously issued, to such extent as may be necessary in the Architect's opinion to protect the Owner from loss for which the Contractor is responsible, including loss resulting from acts and omissions described in Section 3.3.2, because of

- **.1** defective Work not remedied;
- **.2** third party claims filed or reasonable evidence indicating probable filing of such claims, unless security acceptable to the Owner is provided by the Contractor;
- **.3** failure of the Contractor to make payments properly to Subcontractors or suppliers for labor, materials or equipment;

SAMPLE

AIA Document A201™ – 2017. Copyright © 1911, 1915, 1918, 1925, 1937, 1951, 1958, 1961, 1963, 1966, 1970, 1976, 1987, 1997, 2007 and 2017 by The American Institute of Architects. **All rights reserved. WARNING: This AIA® Document is protected by U.S. Copyright Law and International Treaties. Unauthorized reproduction or distribution of this AIA® Document, or any portion of it, may result in severe civil and criminal penalties, and will be prosecuted to the maximum extent possible under the law.** This document was produced by AIA software at 08:34:20 ET on 11/19/2018 under Order No.5013131753 which expires on 10/31/2019, and is not for resale.
User Notes:

(1799450219)

.4 reasonable evidence that the Work cannot be completed for the unpaid balance of the Contract Sum;
.5 damage to the Owner or a Separate Contractor;
.6 reasonable evidence that the Work will not be completed within the Contract Time, and that the unpaid balance would not be adequate to cover actual or liquidated damages for the anticipated delay; or
.7 repeated failure to carry out the Work in accordance with the Contract Documents.

§ 9.5.2 When either party disputes the Architect's decision regarding a Certificate for Payment under Section 9.5.1, in whole or in part, that party may submit a Claim in accordance with Article 15.

§ 9.5.3 When the reasons for withholding certification are removed, certification will be made for amounts previously withheld.

§ 9.5.4 If the Architect withholds certification for payment under Section 9.5.1.3, the Owner may, at its sole option, issue joint checks to the Contractor and to any Subcontractor or supplier to whom the Contractor failed to make payment for Work properly performed or material or equipment suitably delivered. If the Owner makes payments by joint check, the Owner shall notify the Architect and the Contractor shall reflect such payment on its next Application for Payment.

§ 9.6 Progress Payments

§ 9.6.1 After the Architect has issued a Certificate for Payment, the Owner shall make payment in the manner and within the time provided in the Contract Documents, and shall so notify the Architect.

§ 9.6.2 The Contractor shall pay each Subcontractor, no later than seven days after receipt of payment from the Owner, the amount to which the Subcontractor is entitled, reflecting percentages actually retained from payments to the Contractor on account of the Subcontractor's portion of the Work. The Contractor shall, by appropriate agreement with each Subcontractor, require each Subcontractor to make payments to Sub-subcontractors in a similar manner.

§ 9.6.3 The Architect will, on request, furnish to a Subcontractor, if practicable, information regarding percentages of completion or amounts applied for by the Contractor and action taken thereon by the Architect and Owner on account of portions of the Work done by such Subcontractor.

§ 9.6.4 The Owner has the right to request written evidence from the Contractor that the Contractor has properly paid Subcontractors and suppliers amounts paid by the Owner to the Contractor for subcontracted Work. If the Contractor fails to furnish such evidence within seven days, the Owner shall have the right to contact Subcontractors and suppliers to ascertain whether they have been properly paid. Neither the Owner nor Architect shall have an obligation to pay, or to see to the payment of money to, a Subcontractor or supplier, except as may otherwise be required by law.

§ 9.6.5 The Contractor's payments to suppliers shall be treated in a manner similar to that provided in Sections 9.6.2, 9.6.3 and 9.6.4.

§ 9.6.6 A Certificate for Payment, a progress payment, or partial or entire use or occupancy of the Project by the Owner shall not constitute acceptance of Work not in accordance with the Contract Documents.

§ 9.6.7 Unless the Contractor provides the Owner with a payment bond in the full penal sum of the Contract Sum, payments received by the Contractor for Work properly performed by Subcontractors or provided by suppliers shall be held by the Contractor for those Subcontractors or suppliers who performed Work or furnished materials, or both, under contract with the Contractor for which payment was made by the Owner. Nothing contained herein shall require money to be placed in a separate account and not commingled with money of the Contractor, create any fiduciary liability or tort liability on the part of the Contractor for breach of trust, or entitle any person or entity to an award of punitive damages against the Contractor for breach of the requirements of this provision.

§ 9.6.8 Provided the Owner has fulfilled its payment obligations under the Contract Documents, the Contractor shall defend and indemnify the Owner from all loss, liability, damage or expense, including reasonable attorney's fees and litigation expenses, arising out of any lien claim or other claim for payment by any Subcontractor or supplier of any tier. Upon receipt of notice of a lien claim or other claim for payment, the Owner shall notify the Contractor. If approved by the applicable court, when required, the Contractor may substitute a surety bond for the property against which the lien or other claim for payment has been asserted.

SAMPLE

AIA Document A201™ – 2017. Copyright © 1911, 1915, 1918, 1925, 1937, 1951, 1958, 1961, 1963, 1966, 1970, 1976, 1987, 1997, 2007 and 2017 by The American Institute of Architects. **All rights reserved. WARNING: This AIA® Document is protected by U.S. Copyright Law and International Treaties. Unauthorized reproduction or distribution of this AIA® Document, or any portion of it, may result in severe civil and criminal penalties, and will be prosecuted to the maximum extent possible under the law.** This document was produced by AIA software at 08:34:20 ET on 11/19/2018 under Order No.5013131753 which expires on 10/31/2019, and is not for resale.
User Notes: (1799450219)

§ 9.7 Failure of Payment

If the Architect does not issue a Certificate for Payment, through no fault of the Contractor, within seven days after receipt of the Contractor's Application for Payment, or if the Owner does not pay the Contractor within seven days after the date established in the Contract Documents, the amount certified by the Architect or awarded by binding dispute resolution, then the Contractor may, upon seven additional days' notice to the Owner and Architect, stop the Work until payment of the amount owing has been received. The Contract Time shall be extended appropriately and the Contract Sum shall be increased by the amount of the Contractor's reasonable costs of shutdown, delay and start-up, plus interest as provided for in the Contract Documents.

§ 9.8 Substantial Completion

§ 9.8.1 Substantial Completion is the stage in the progress of the Work when the Work or designated portion thereof is sufficiently complete in accordance with the Contract Documents so that the Owner can occupy or utilize the Work for its intended use.

§ 9.8.2 When the Contractor considers that the Work, or a portion thereof which the Owner agrees to accept separately, is substantially complete, the Contractor shall prepare and submit to the Architect a comprehensive list of items to be completed or corrected prior to final payment. Failure to include an item on such list does not alter the responsibility of the Contractor to complete all Work in accordance with the Contract Documents.

§ 9.8.3 Upon receipt of the Contractor's list, the Architect will make an inspection to determine whether the Work or designated portion thereof is substantially complete. If the Architect's inspection discloses any item, whether or not included on the Contractor's list, which is not sufficiently complete in accordance with the Contract Documents so that the Owner can occupy or utilize the Work or designated portion thereof for its intended use, the Contractor shall, before issuance of the Certificate of Substantial Completion, complete or correct such item upon notification by the Architect. In such case, the Contractor shall then submit a request for another inspection by the Architect to determine Substantial Completion.

§ 9.8.4 When the Work or designated portion thereof is substantially complete, the Architect will prepare a Certificate of Substantial Completion that shall establish the date of Substantial Completion; establish responsibilities of the Owner and Contractor for security, maintenance, heat, utilities, damage to the Work and insurance; and fix the time within which the Contractor shall finish all items on the list accompanying the Certificate. Warranties required by the Contract Documents shall commence on the date of Substantial Completion of the Work or designated portion thereof unless otherwise provided in the Certificate of Substantial Completion.

§ 9.8.5 The Certificate of Substantial Completion shall be submitted to the Owner and Contractor for their written acceptance of responsibilities assigned to them in the Certificate. Upon such acceptance, and consent of surety if any, the Owner shall make payment of retainage applying to the Work or designated portion thereof. Such payment shall be adjusted for Work that is incomplete or not in accordance with the requirements of the Contract Documents.

§ 9.9 Partial Occupancy or Use

§ 9.9.1 The Owner may occupy or use any completed or partially completed portion of the Work at any stage when such portion is designated by separate agreement with the Contractor, provided such occupancy or use is consented to by the insurer and authorized by public authorities having jurisdiction over the Project. Such partial occupancy or use may commence whether or not the portion is substantially complete, provided the Owner and Contractor have accepted in writing the responsibilities assigned to each of them for payments, retainage, if any, security, maintenance, heat, utilities, damage to the Work and insurance, and have agreed in writing concerning the period for correction of the Work and commencement of warranties required by the Contract Documents. When the Contractor considers a portion substantially complete, the Contractor shall prepare and submit a list to the Architect as provided under Section 9.8.2. Consent of the Contractor to partial occupancy or use shall not be unreasonably withheld. The stage of the progress of the Work shall be determined by written agreement between the Owner and Contractor or, if no agreement is reached, by decision of the Architect.

§ 9.9.2 Immediately prior to such partial occupancy or use, the Owner, Contractor, and Architect shall jointly inspect the area to be occupied or portion of the Work to be used in order to determine and record the condition of the Work.

SAMPLE

AIA Document A201™ – 2017. Copyright © 1911, 1915, 1918, 1925, 1937, 1951, 1958, 1961, 1963, 1966, 1970, 1976, 1987, 1997, 2007 and 2017 by The American Institute of Architects. **All rights reserved. WARNING: This AIA® Document is protected by U.S. Copyright Law and International Treaties. Unauthorized reproduction or distribution of this AIA® Document, or any portion of it, may result in severe civil and criminal penalties, and will be prosecuted to the maximum extent possible under the law.** This document was produced by AIA software at 08:34:20 ET on 11/19/2018 under Order No.5013131753 which expires on 10/31/2019, and is not for resale.
User Notes: (1799450219)

§ 9.9.3 Unless otherwise agreed upon, partial occupancy or use of a portion or portions of the Work shall not constitute acceptance of Work not complying with the requirements of the Contract Documents.

§ 9.10 Final Completion and Final Payment

§ 9.10.1 Upon receipt of the Contractor's notice that the Work is ready for final inspection and acceptance and upon receipt of a final Application for Payment, the Architect will promptly make such inspection. When the Architect finds the Work acceptable under the Contract Documents and the Contract fully performed, the Architect will promptly issue a final Certificate for Payment stating that to the best of the Architect's knowledge, information and belief, and on the basis of the Architect's on-site visits and inspections, the Work has been completed in accordance with the Contract Documents and that the entire balance found to be due the Contractor and noted in the final Certificate is due and payable. The Architect's final Certificate for Payment will constitute a further representation that conditions listed in Section 9.10.2 as precedent to the Contractor's being entitled to final payment have been fulfilled.

§ 9.10.2 Neither final payment nor any remaining retained percentage shall become due until the Contractor submits to the Architect (1) an affidavit that payrolls, bills for materials and equipment, and other indebtedness connected with the Work for which the Owner or the Owner's property might be responsible or encumbered (less amounts withheld by Owner) have been paid or otherwise satisfied, (2) a certificate evidencing that insurance required by the Contract Documents to remain in force after final payment is currently in effect, (3) a written statement that the Contractor knows of no reason that the insurance will not be renewable to cover the period required by the Contract Documents, (4) consent of surety, if any, to final payment, (5) documentation of any special warranties, such as manufacturers' warranties or specific Subcontractor warranties, and (6) if required by the Owner, other data establishing payment or satisfaction of obligations, such as receipts and releases and waivers of liens, claims, security interests, or encumbrances arising out of the Contract, to the extent and in such form as may be designated by the Owner. If a Subcontractor refuses to furnish a release or waiver required by the Owner, the Contractor may furnish a bond satisfactory to the Owner to indemnify the Owner against such lien, claim, security interest, or encumbrance. If a lien, claim, security interest, or encumbrance remains unsatisfied after payments are made, the Contractor shall refund to the Owner all money that the Owner may be compelled to pay in discharging the lien, claim, security interest, or encumbrance, including all costs and reasonable attorneys' fees.

§ 9.10.3 If, after Substantial Completion of the Work, final completion thereof is materially delayed through no fault of the Contractor or by issuance of Change Orders affecting final completion, and the Architect so confirms, the Owner shall, upon application by the Contractor and certification by the Architect, and without terminating the Contract, make payment of the balance due for that portion of the Work fully completed, corrected, and accepted. If the remaining balance for Work not fully completed or corrected is less than retainage stipulated in the Contract Documents, and if bonds have been furnished, the written consent of the surety to payment of the balance due for that portion of the Work fully completed and accepted shall be submitted by the Contractor to the Architect prior to certification of such payment. Such payment shall be made under terms and conditions governing final payment, except that it shall not constitute a waiver of Claims.

§ 9.10.4 The making of final payment shall constitute a waiver of Claims by the Owner except those arising from

- **.1** liens, Claims, security interests, or encumbrances arising out of the Contract and unsettled;
- **.2** failure of the Work to comply with the requirements of the Contract Documents;
- **.3** terms of special warranties required by the Contract Documents; or
- **.4** audits performed by the Owner, if permitted by the Contract Documents, after final payment.

§ 9.10.5 Acceptance of final payment by the Contractor, a Subcontractor, or a supplier, shall constitute a waiver of claims by that payee except those previously made in writing and identified by that payee as unsettled at the time of final Application for Payment.

ARTICLE 10 PROTECTION OF PERSONS AND PROPERTY

§ 10.1 Safety Precautions and Programs

The Contractor shall be responsible for initiating, maintaining, and supervising all safety precautions and programs in connection with the performance of the Contract.

§ 10.2 Safety of Persons and Property

§ 10.2.1 The Contractor shall take reasonable precautions for safety of, and shall provide reasonable protection to prevent damage, injury, or loss to

SAMPLE

AIA Document A201™ – 2017. Copyright © 1911, 1915, 1918, 1925, 1937, 1951, 1958, 1961, 1963, 1966, 1970, 1976, 1987, 1997, 2007 and 2017 by The American Institute of Architects. **All rights reserved. WARNING: This AIA® Document is protected by U.S. Copyright Law and International Treaties. Unauthorized reproduction or distribution of this AIA® Document, or any portion of it, may result in severe civil and criminal penalties, and will be prosecuted to the maximum extent possible under the law.** This document was produced by AIA software at 08:34:20 ET on 11/19/2018 under Order No.5013131753 which expires on 10/31/2019, and is not for resale.
User Notes: (1799450219)

.1 employees on the Work and other persons who may be affected thereby;
.2 the Work and materials and equipment to be incorporated therein, whether in storage on or off the site, under care, custody, or control of the Contractor, a Subcontractor, or a Sub-subcontractor; and
.3 other property at the site or adjacent thereto, such as trees, shrubs, lawns, walks, pavements, roadways, structures, and utilities not designated for removal, relocation, or replacement in the course of construction.

§ 10.2.2 The Contractor shall comply with, and give notices required by applicable laws, statutes, ordinances, codes, rules and regulations, and lawful orders of public authorities, bearing on safety of persons or property or their protection from damage, injury, or loss.

§ 10.2.3 The Contractor shall implement, erect, and maintain, as required by existing conditions and performance of the Contract, reasonable safeguards for safety and protection, including posting danger signs and other warnings against hazards; promulgating safety regulations; and notifying the owners and users of adjacent sites and utilities of the safeguards.

§ 10.2.4 When use or storage of explosives or other hazardous materials or equipment, or unusual methods are necessary for execution of the Work, the Contractor shall exercise utmost care and carry on such activities under supervision of properly qualified personnel.

§ 10.2.5 The Contractor shall promptly remedy damage and loss (other than damage or loss insured under property insurance required by the Contract Documents) to property referred to in Sections 10.2.1.2 and 10.2.1.3 caused in whole or in part by the Contractor, a Subcontractor, a Sub-subcontractor, or anyone directly or indirectly employed by any of them, or by anyone for whose acts they may be liable and for which the Contractor is responsible under Sections 10.2.1.2 and 10.2.1.3. The Contractor may make a Claim for the cost to remedy the damage or loss to the extent such damage or loss is attributable to acts or omissions of the Owner or Architect or anyone directly or indirectly employed by either of them, or by anyone for whose acts either of them may be liable, and not attributable to the fault or negligence of the Contractor. The foregoing obligations of the Contractor are in addition to the Contractor's obligations under Section 3.18.

§ 10.2.6 The Contractor shall designate a responsible member of the Contractor's organization at the site whose duty shall be the prevention of accidents. This person shall be the Contractor's superintendent unless otherwise designated by the Contractor in writing to the Owner and Architect.

§ 10.2.7 The Contractor shall not permit any part of the construction or site to be loaded so as to cause damage or create an unsafe condition.

§ 10.2.8 Injury or Damage to Person or Property
If either party suffers injury or damage to person or property because of an act or omission of the other party, or of others for whose acts such party is legally responsible, notice of the injury or damage, whether or not insured, shall be given to the other party within a reasonable time not exceeding 21 days after discovery. The notice shall provide sufficient detail to enable the other party to investigate the matter.

§ 10.3 Hazardous Materials and Substances
§ 10.3.1 The Contractor is responsible for compliance with any requirements included in the Contract Documents regarding hazardous materials or substances. If the Contractor encounters a hazardous material or substance not addressed in the Contract Documents and if reasonable precautions will be inadequate to prevent foreseeable bodily injury or death to persons resulting from a material or substance, including but not limited to asbestos or polychlorinated biphenyl (PCB), encountered on the site by the Contractor, the Contractor shall, upon recognizing the condition, immediately stop Work in the affected area and notify the Owner and Architect of the condition.

§ 10.3.2 Upon receipt of the Contractor's notice, the Owner shall obtain the services of a licensed laboratory to verify the presence or absence of the material or substance reported by the Contractor and, in the event such material or substance is found to be present, to cause it to be rendered harmless. Unless otherwise required by the Contract Documents, the Owner shall furnish in writing to the Contractor and Architect the names and qualifications of persons or entities who are to perform tests verifying the presence or absence of the material or substance or who are to perform the task of removal or safe containment of the material or substance. The Contractor and the Architect will

SAMPLE

AIA Document A201™ – 2017. Copyright © 1911, 1915, 1918, 1925, 1937, 1951, 1958, 1961, 1963, 1966, 1970, 1976, 1987, 1997, 2007 and 2017 by The American Institute of Architects. **All rights reserved. WARNING: This AIA® Document is protected by U.S. Copyright Law and International Treaties. Unauthorized reproduction or distribution of this AIA® Document, or any portion of it, may result in severe civil and criminal penalties, and will be prosecuted to the maximum extent possible under the law.** This document was produced by AIA software at 08:34:20 ET on 11/19/2018 under Order No.5013131753 which expires on 10/31/2019, and is not for resale.
User Notes: (1799450219)

promptly reply to the Owner in writing stating whether or not either has reasonable objection to the persons or entities proposed by the Owner. If either the Contractor or Architect has an objection to a person or entity proposed by the Owner, the Owner shall propose another to whom the Contractor and the Architect have no reasonable objection. When the material or substance has been rendered harmless, Work in the affected area shall resume upon written agreement of the Owner and Contractor. By Change Order, the Contract Time shall be extended appropriately and the Contract Sum shall be increased by the amount of the Contractor's reasonable additional costs of shutdown, delay, and start-up.

§ 10.3.3 To the fullest extent permitted by law, the Owner shall indemnify and hold harmless the Contractor, Subcontractors, Architect, Architect's consultants, and agents and employees of any of them from and against claims, damages, losses, and expenses, including but not limited to attorneys' fees, arising out of or resulting from performance of the Work in the affected area if in fact the material or substance presents the risk of bodily injury or death as described in Section 10.3.1 and has not been rendered harmless, provided that such claim, damage, loss, or expense is attributable to bodily injury, sickness, disease or death, or to injury to or destruction of tangible property (other than the Work itself), except to the extent that such damage, loss, or expense is due to the fault or negligence of the party seeking indemnity.

§ 10.3.4 The Owner shall not be responsible under this Section 10.3 for hazardous materials or substances the Contractor brings to the site unless such materials or substances are required by the Contract Documents. The Owner shall be responsible for hazardous materials or substances required by the Contract Documents, except to the extent of the Contractor's fault or negligence in the use and handling of such materials or substances.

§ 10.3.5 The Contractor shall reimburse the Owner for the cost and expense the Owner incurs (1) for remediation of hazardous materials or substances the Contractor brings to the site and negligently handles, or (2) where the Contractor fails to perform its obligations under Section 10.3.1, except to the extent that the cost and expense are due to the Owner's fault or negligence.

§ 10.3.6 If, without negligence on the part of the Contractor, the Contractor is held liable by a government agency for the cost of remediation of a hazardous material or substance solely by reason of performing Work as required by the Contract Documents, the Owner shall reimburse the Contractor for all cost and expense thereby incurred.

SAMPLE

§ 10.4 Emergencies

In an emergency affecting safety of persons or property, the Contractor shall act, at the Contractor's discretion, to prevent threatened damage, injury, or loss. Additional compensation or extension of time claimed by the Contractor on account of an emergency shall be determined as provided in Article 15 and Article 7.

ARTICLE 11 INSURANCE AND BONDS

§ 11.1 Contractor's Insurance and Bonds

§ 11.1.1 The Contractor shall purchase and maintain insurance of the types and limits of liability, containing the endorsements, and subject to the terms and conditions, as described in the Agreement or elsewhere in the Contract Documents. The Contractor shall purchase and maintain the required insurance from an insurance company or insurance companies lawfully authorized to issue insurance in the jurisdiction where the Project is located. The Owner, Architect, and Architect's consultants shall be named as additional insureds under the Contractor's commercial general liability policy or as otherwise described in the Contract Documents.

§ 11.1.2 The Contractor shall provide surety bonds of the types, for such penal sums, and subject to such terms and conditions as required by the Contract Documents. The Contractor shall purchase and maintain the required bonds from a company or companies lawfully authorized to issue surety bonds in the jurisdiction where the Project is located.

§ 11.1.3 Upon the request of any person or entity appearing to be a potential beneficiary of bonds covering payment of obligations arising under the Contract, the Contractor shall promptly furnish a copy of the bonds or shall authorize a copy to be furnished.

§ 11.1.4 Notice of Cancellation or Expiration of Contractor's Required Insurance. Within three (3) business days of the date the Contractor becomes aware of an impending or actual cancellation or expiration of any insurance required by the Contract Documents, the Contractor shall provide notice to the Owner of such impending or actual cancellation or

AIA Document A201™ – 2017. Copyright © 1911, 1915, 1918, 1925, 1937, 1951, 1958, 1961, 1963, 1966, 1970, 1976, 1987, 1997, 2007 and 2017 by The American Institute of Architects. **All rights reserved. WARNING: This AIA® Document is protected by U.S. Copyright Law and International Treaties. Unauthorized reproduction or distribution of this AIA® Document, or any portion of it, may result in severe civil and criminal penalties, and will be prosecuted to the maximum extent possible under the law.** This document was produced by AIA software at 08:34:20 ET on 11/19/2018 under Order No.5013131753 which expires on 10/31/2019, and is not for resale.
User Notes: (1799450219)

expiration. Upon receipt of notice from the Contractor, the Owner shall, unless the lapse in coverage arises from an act or omission of the Owner, have the right to stop the Work until the lapse in coverage has been cured by the procurement of replacement coverage by the Contractor. The furnishing of notice by the Contractor shall not relieve the Contractor of any contractual obligation to provide any required coverage.

§ 11.2 Owner's Insurance

§ 11.2.1 The Owner shall purchase and maintain insurance of the types and limits of liability, containing the endorsements, and subject to the terms and conditions, as described in the Agreement or elsewhere in the Contract Documents. The Owner shall purchase and maintain the required insurance from an insurance company or insurance companies lawfully authorized to issue insurance in the jurisdiction where the Project is located.

§ 11.2.2 Failure to Purchase Required Property Insurance. If the Owner fails to purchase and maintain the required property insurance, with all of the coverages and in the amounts described in the Agreement or elsewhere in the Contract Documents, the Owner shall inform the Contractor in writing prior to commencement of the Work. Upon receipt of notice from the Owner, the Contractor may delay commencement of the Work and may obtain insurance that will protect the interests of the Contractor, Subcontractors, and Sub-Subcontractors in the Work. When the failure to provide coverage has been cured or resolved, the Contract Sum and Contract Time shall be equitably adjusted. In the event the Owner fails to procure coverage, the Owner waives all rights against the Contractor, Subcontractors, and Sub-subcontractors to the extent the loss to the Owner would have been covered by the insurance to have been procured by the Owner. The cost of the insurance shall be charged to the Owner by a Change Order. If the Owner does not provide written notice, and the Contractor is damaged by the failure or neglect of the Owner to purchase or maintain the required insurance, the Owner shall reimburse the Contractor for all reasonable costs and damages attributable thereto.

§ 11.2.3 Notice of Cancellation or Expiration of Owner's Required Property Insurance. Within three (3) business days of the date the Owner becomes aware of an impending or actual cancellation or expiration of any property insurance required by the Contract Documents, the Owner shall provide notice to the Contractor of such impending or actual cancellation or expiration. Unless the lapse in coverage arises from an act or omission of the Contractor: (1) the Contractor, upon receipt of notice from the Owner, shall have the right to stop the Work until the lapse in coverage has been cured by the procurement of replacement coverage by either the Owner or the Contractor; (2) the Contract Time and Contract Sum shall be equitably adjusted; and (3) the Owner waives all rights against the Contractor, Subcontractors, and Sub-subcontractors to the extent any loss to the Owner would have been covered by the insurance had it not expired or been cancelled. If the Contractor purchases replacement coverage, the cost of the insurance shall be charged to the Owner by an appropriate Change Order. The furnishing of notice by the Owner shall not relieve the Owner of any contractual obligation to provide required insurance.

§ 11.3 Waivers of Subrogation

§ 11.3.1 The Owner and Contractor waive all rights against (1) each other and any of their subcontractors, sub-subcontractors, agents, and employees, each of the other; (2) the Architect and Architect's consultants; and (3) Separate Contractors, if any, and any of their subcontractors, sub-subcontractors, agents, and employees, for damages caused by fire, or other causes of loss, to the extent those losses are covered by property insurance required by the Agreement or other property insurance applicable to the Project, except such rights as they have to proceeds of such insurance. The Owner or Contractor, as appropriate, shall require similar written waivers in favor of the individuals and entities identified above from the Architect, Architect's consultants, Separate Contractors, subcontractors, and sub-subcontractors. The policies of insurance purchased and maintained by each person or entity agreeing to waive claims pursuant to this section 11.3.1 shall not prohibit this waiver of subrogation. This waiver of subrogation shall be effective as to a person or entity (1) even though that person or entity would otherwise have a duty of indemnification, contractual or otherwise, (2) even though that person or entity did not pay the insurance premium directly or indirectly, or (3) whether or not the person or entity had an insurable interest in the damaged property.

§ 11.3.2 If during the Project construction period the Owner insures properties, real or personal or both, at or adjacent to the site by property insurance under policies separate from those insuring the Project, or if after final payment property insurance is to be provided on the completed Project through a policy or policies other than those insuring the Project during the construction period, to the extent permissible by such policies, the Owner waives all rights in accordance with the terms of Section 11.3.1 for damages caused by fire or other causes of loss covered by this separate property insurance.

SAMPLE

AIA Document A201™ – 2017. Copyright © 1911, 1915, 1918, 1925, 1937, 1951, 1958, 1961, 1963, 1966, 1970, 1976, 1987, 1997, 2007 and 2017 by The American Institute of Architects. **All rights reserved. WARNING: This AIA® Document is protected by U.S. Copyright Law and International Treaties. Unauthorized reproduction or distribution of this AIA® Document, or any portion of it, may result in severe civil and criminal penalties, and will be prosecuted to the maximum extent possible under the law.** This document was produced by AIA software at 08:34:20 ET on 11/19/2018 under Order No.5013131753 which expires on 10/31/2019, and is not for resale.
User Notes: (1799450219)

§ 11.4 Loss of Use, Business Interruption, and Delay in Completion Insurance

The Owner, at the Owner's option, may purchase and maintain insurance that will protect the Owner against loss of use of the Owner's property, or the inability to conduct normal operations, due to fire or other causes of loss. The Owner waives all rights of action against the Contractor and Architect for loss of use of the Owner's property, due to fire or other hazards however caused.

§11.5 Adjustment and Settlement of Insured Loss

§ 11.5.1 A loss insured under the property insurance required by the Agreement shall be adjusted by the Owner as fiduciary and made payable to the Owner as fiduciary for the insureds, as their interests may appear, subject to requirements of any applicable mortgagee clause and of Section 11.5.2. The Owner shall pay the Architect and Contractor their just shares of insurance proceeds received by the Owner, and by appropriate agreements the Architect and Contractor shall make payments to their consultants and Subcontractors in similar manner.

§ 11.5.2 Prior to settlement of an insured loss, the Owner shall notify the Contractor of the terms of the proposed settlement as well as the proposed allocation of the insurance proceeds. The Contractor shall have 14 days from receipt of notice to object to the proposed settlement or allocation of the proceeds. If the Contractor does not object, the Owner shall settle the loss and the Contractor shall be bound by the settlement and allocation. Upon receipt, the Owner shall deposit the insurance proceeds in a separate account and make the appropriate distributions. Thereafter, if no other agreement is made or the Owner does not terminate the Contract for convenience, the Owner and Contractor shall execute a Change Order for reconstruction of the damaged or destroyed Work in the amount allocated for that purpose. If the Contractor timely objects to either the terms of the proposed settlement or the allocation of the proceeds, the Owner may proceed to settle the insured loss, and any dispute between the Owner and Contractor arising out of the settlement or allocation of the proceeds shall be resolved pursuant to Article 15. Pending resolution of any dispute, the Owner may issue a Construction Change Directive for the reconstruction of the damaged or destroyed Work.

SAMPLE

ARTICLE 12 UNCOVERING AND CORRECTION OF WORK

§ 12.1 Uncovering of Work

§ 12.1.1 If a portion of the Work is covered contrary to the Architect's request or to requirements specifically expressed in the Contract Documents, it must, if requested in writing by the Architect, be uncovered for the Architect's examination and be replaced at the Contractor's expense without change in the Contract Time.

§ 12.1.2 If a portion of the Work has been covered that the Architect has not specifically requested to examine prior to its being covered, the Architect may request to see such Work and it shall be uncovered by the Contractor. If such Work is in accordance with the Contract Documents, the Contractor shall be entitled to an equitable adjustment to the Contract Sum and Contract Time as may be appropriate. If such Work is not in accordance with the Contract Documents, the costs of uncovering the Work, and the cost of correction, shall be at the Contractor's expense.

§ 12.2 Correction of Work

§ 12.2.1 Before Substantial Completion

The Contractor shall promptly correct Work rejected by the Architect or failing to conform to the requirements of the Contract Documents, discovered before Substantial Completion and whether or not fabricated, installed or completed. Costs of correcting such rejected Work, including additional testing and inspections, the cost of uncovering and replacement, and compensation for the Architect's services and expenses made necessary thereby, shall be at the Contractor's expense.

§ 12.2.2 After Substantial Completion

§ 12.2.2.1 In addition to the Contractor's obligations under Section 3.5, if, within one year after the date of Substantial Completion of the Work or designated portion thereof or after the date for commencement of warranties established under Section 9.9.1, or by terms of any applicable special warranty required by the Contract Documents, any of the Work is found to be not in accordance with the requirements of the Contract Documents, the Contractor shall correct it promptly after receipt of notice from the Owner to do so, unless the Owner has previously given the Contractor a written acceptance of such condition. The Owner shall give such notice promptly after discovery of the condition. During the one-year period for correction of Work, if the Owner fails to notify the Contractor and give the Contractor an opportunity to make the correction, the Owner waives the rights to require correction by the Contractor and to make a claim for breach of warranty. If the Contractor fails to correct nonconforming Work within a reasonable time during

AIA Document A201™ – 2017. Copyright © 1911, 1915, 1918, 1925, 1937, 1951, 1958, 1961, 1963, 1966, 1970, 1976, 1987, 1997, 2007 and 2017 by The American Institute of Architects. **All rights reserved. WARNING: This AIA® Document is protected by U.S. Copyright Law and International Treaties. Unauthorized reproduction or distribution of this AIA® Document, or any portion of it, may result in severe civil and criminal penalties, and will be prosecuted to the maximum extent possible under the law.** This document was produced by AIA software at 08:34:20 ET on 11/19/2018 under Order No.5013131753 which expires on 10/31/2019, and is not for resale.
User Notes: (1799450219)

that period after receipt of notice from the Owner or Architect, the Owner may correct it in accordance with Section 2.5.

§ 12.2.2.2 The one-year period for correction of Work shall be extended with respect to portions of Work first performed after Substantial Completion by the period of time between Substantial Completion and the actual completion of that portion of the Work.

§ 12.2.2.3 The one-year period for correction of Work shall not be extended by corrective Work performed by the Contractor pursuant to this Section 12.2.

§ 12.2.3 The Contractor shall remove from the site portions of the Work that are not in accordance with the requirements of the Contract Documents and are neither corrected by the Contractor nor accepted by the Owner.

§ 12.2.4 The Contractor shall bear the cost of correcting destroyed or damaged construction of the Owner or Separate Contractors, whether completed or partially completed, caused by the Contractor's correction or removal of Work that is not in accordance with the requirements of the Contract Documents.

§ 12.2.5 Nothing contained in this Section 12.2 shall be construed to establish a period of limitation with respect to other obligations the Contractor has under the Contract Documents. Establishment of the one-year period for correction of Work as described in Section 12.2.2 relates only to the specific obligation of the Contractor to correct the Work, and has no relationship to the time within which the obligation to comply with the Contract Documents may be sought to be enforced, nor to the time within which proceedings may be commenced to establish the Contractor's liability with respect to the Contractor's obligations other than specifically to correct the Work.

§ 12.3 Acceptance of Nonconforming Work

If the Owner prefers to accept Work that is not in accordance with the requirements of the Contract Documents, the Owner may do so instead of requiring its removal and correction, in which case the Contract Sum will be reduced as appropriate and equitable. Such adjustment shall be effected whether or not final payment has been made.

ARTICLE 13 MISCELLANEOUS PROVISIONS

§ 13.1 Governing Law

The Contract shall be governed by the law of the place where the Project is located, excluding that jurisdiction's choice of law rules. If the parties have selected arbitration as the method of binding dispute resolution, the Federal Arbitration Act shall govern Section 15.4.

§ 13.2 Successors and Assigns

§ 13.2.1 The Owner and Contractor respectively bind themselves, their partners, successors, assigns, and legal representatives to covenants, agreements, and obligations contained in the Contract Documents. Except as provided in Section 13.2.2, neither party to the Contract shall assign the Contract as a whole without written consent of the other. If either party attempts to make an assignment without such consent, that party shall nevertheless remain legally responsible for all obligations under the Contract.

§ 13.2.2 The Owner may, without consent of the Contractor, assign the Contract to a lender providing construction financing for the Project, if the lender assumes the Owner's rights and obligations under the Contract Documents. The Contractor shall execute all consents reasonably required to facilitate the assignment.

§ 13.3 Rights and Remedies

§ 13.3.1 Duties and obligations imposed by the Contract Documents and rights and remedies available thereunder shall be in addition to and not a limitation of duties, obligations, rights, and remedies otherwise imposed or available by law.

§ 13.3.2 No action or failure to act by the Owner, Architect, or Contractor shall constitute a waiver of a right or duty afforded them under the Contract, nor shall such action or failure to act constitute approval of or acquiescence in a breach thereunder, except as may be specifically agreed upon in writing.

SAMPLE

AIA Document A201™ – 2017. Copyright © 1911, 1915, 1918, 1925, 1937, 1951, 1958, 1961, 1963, 1966, 1970, 1976, 1987, 1997, 2007 and 2017 by The American Institute of Architects. **All rights reserved. WARNING: This AIA® Document is protected by U.S. Copyright Law and International Treaties. Unauthorized reproduction or distribution of this AIA® Document, or any portion of it, may result in severe civil and criminal penalties, and will be prosecuted to the maximum extent possible under the law.** This document was produced by AIA software at 08:34:20 ET on 11/19/2018 under Order No.5013131753 which expires on 10/31/2019, and is not for resale.
User Notes: (1799450219)

§ 13.4 Tests and Inspections

§ 13.4.1 Tests, inspections, and approvals of portions of the Work shall be made as required by the Contract Documents and by applicable laws, statutes, ordinances, codes, rules, and regulations or lawful orders of public authorities. Unless otherwise provided, the Contractor shall make arrangements for such tests, inspections, and approvals with an independent testing laboratory or entity acceptable to the Owner, or with the appropriate public authority, and shall bear all related costs of tests, inspections, and approvals. The Contractor shall give the Architect timely notice of when and where tests and inspections are to be made so that the Architect may be present for such procedures. The Owner shall bear costs of tests, inspections, or approvals that do not become requirements until after bids are received or negotiations concluded. The Owner shall directly arrange and pay for tests, inspections, or approvals where building codes or applicable laws or regulations so require.

§ 13.4.2 If the Architect, Owner, or public authorities having jurisdiction determine that portions of the Work require additional testing, inspection, or approval not included under Section 13.4.1, the Architect will, upon written authorization from the Owner, instruct the Contractor to make arrangements for such additional testing, inspection, or approval, by an entity acceptable to the Owner, and the Contractor shall give timely notice to the Architect of when and where tests and inspections are to be made so that the Architect may be present for such procedures. Such costs, except as provided in Section 13.4.3, shall be at the Owner's expense.

§ 13.4.3 If procedures for testing, inspection, or approval under Sections 13.4.1 and 13.4.2 reveal failure of the portions of the Work to comply with requirements established by the Contract Documents, all costs made necessary by such failure, including those of repeated procedures and compensation for the Architect's services and expenses, shall be at the Contractor's expense.

§ 13.4.4 Required certificates of testing, inspection, or approval shall, unless otherwise required by the Contract Documents, be secured by the Contractor and promptly delivered to the Architect.

§ 13.4.5 If the Architect is to observe tests, inspections, or approvals required by the Contract Documents, the Architect will do so promptly and, where practicable, at the normal place of testing.

§ 13.4.6 Tests or inspections conducted pursuant to the Contract Documents shall be made promptly to avoid unreasonable delay in the Work.

SAMPLE

§ 13.5 Interest

Payments due and unpaid under the Contract Documents shall bear interest from the date payment is due at the rate the parties agree upon in writing or, in the absence thereof, at the legal rate prevailing from time to time at the place where the Project is located.

ARTICLE 14 TERMINATION OR SUSPENSION OF THE CONTRACT

§ 14.1 Termination by the Contractor

§ 14.1.1 The Contractor may terminate the Contract if the Work is stopped for a period of 30 consecutive days through no act or fault of the Contractor, a Subcontractor, a Sub-subcontractor, their agents or employees, or any other persons or entities performing portions of the Work, for any of the following reasons:

- **.1** Issuance of an order of a court or other public authority having jurisdiction that requires all Work to be stopped;
- **.2** An act of government, such as a declaration of national emergency, that requires all Work to be stopped;
- **.3** Because the Architect has not issued a Certificate for Payment and has not notified the Contractor of the reason for withholding certification as provided in Section 9.4.1, or because the Owner has not made payment on a Certificate for Payment within the time stated in the Contract Documents; or
- **.4** The Owner has failed to furnish to the Contractor reasonable evidence as required by Section 2.2.

§ 14.1.2 The Contractor may terminate the Contract if, through no act or fault of the Contractor, a Subcontractor, a Sub-subcontractor, their agents or employees, or any other persons or entities performing portions of the Work, repeated suspensions, delays, or interruptions of the entire Work by the Owner as described in Section 14.3, constitute in the aggregate more than 100 percent of the total number of days scheduled for completion, or 120 days in any 365-day period, whichever is less.

AIA Document A201™ – 2017. Copyright © 1911, 1915, 1918, 1925, 1937, 1951, 1958, 1961, 1963, 1966, 1970, 1976, 1987, 1997, 2007 and 2017 by The American Institute of Architects. **All rights reserved. WARNING: This AIA® Document is protected by U.S. Copyright Law and International Treaties. Unauthorized reproduction or distribution of this AIA® Document, or any portion of it, may result in severe civil and criminal penalties, and will be prosecuted to the maximum extent possible under the law.** This document was produced by AIA software at 08:34:20 ET on 11/19/2018 under Order No.5013131753 which expires on 10/31/2019, and is not for resale.
User Notes: (1799450219)

§ 14.1.3 If one of the reasons described in Section 14.1.1 or 14.1.2 exists, the Contractor may, upon seven days' notice to the Owner and Architect, terminate the Contract and recover from the Owner payment for Work executed, as well as reasonable overhead and profit on Work not executed, and costs incurred by reason of such termination.

§ 14.1.4 If the Work is stopped for a period of 60 consecutive days through no act or fault of the Contractor, a Subcontractor, a Sub-subcontractor, or their agents or employees or any other persons or entities performing portions of the Work because the Owner has repeatedly failed to fulfill the Owner's obligations under the Contract Documents with respect to matters important to the progress of the Work, the Contractor may, upon seven additional days' notice to the Owner and the Architect, terminate the Contract and recover from the Owner as provided in Section 14.1.3.

§ 14.2 Termination by the Owner for Cause

§ 14.2.1 The Owner may terminate the Contract if the Contractor

- **.1** repeatedly refuses or fails to supply enough properly skilled workers or proper materials;
- **.2** fails to make payment to Subcontractors or suppliers in accordance with the respective agreements between the Contractor and the Subcontractors or suppliers;
- **.3** repeatedly disregards applicable laws, statutes, ordinances, codes, rules and regulations, or lawful orders of a public authority; or
- **.4** otherwise is guilty of substantial breach of a provision of the Contract Documents.

§ 14.2.2 When any of the reasons described in Section 14.2.1 exist, and upon certification by the Architect that sufficient cause exists to justify such action, the Owner may, without prejudice to any other rights or remedies of the Owner and after giving the Contractor and the Contractor's surety, if any, seven days' notice, terminate employment of the Contractor and may, subject to any prior rights of the surety:

- **.1** Exclude the Contractor from the site and take possession of all materials, equipment, tools, and construction equipment and machinery thereon owned by the Contractor;
- **.2** Accept assignment of subcontracts pursuant to Section 5.4; and
- **.3** Finish the Work by whatever reasonable method the Owner may deem expedient. Upon written request of the Contractor, the Owner shall furnish to the Contractor a detailed accounting of the costs incurred by the Owner in finishing the Work.

§ 14.2.3 When the Owner terminates the Contract for one of the reasons stated in Section 14.2.1, the Contractor shall not be entitled to receive further payment until the Work is finished.

§ 14.2.4 If the unpaid balance of the Contract Sum exceeds costs of finishing the Work, including compensation for the Architect's services and expenses made necessary thereby, and other damages incurred by the Owner and not expressly waived, such excess shall be paid to the Contractor. If such costs and damages exceed the unpaid balance, the Contractor shall pay the difference to the Owner. The amount to be paid to the Contractor or Owner, as the case may be, shall be certified by the Initial Decision Maker, upon application, and this obligation for payment shall survive termination of the Contract.

§ 14.3 Suspension by the Owner for Convenience

§ 14.3.1 The Owner may, without cause, order the Contractor in writing to suspend, delay or interrupt the Work, in whole or in part for such period of time as the Owner may determine.

§ 14.3.2 The Contract Sum and Contract Time shall be adjusted for increases in the cost and time caused by suspension, delay, or interruption under Section 14.3.1. Adjustment of the Contract Sum shall include profit. No adjustment shall be made to the extent

- **.1** that performance is, was, or would have been, so suspended, delayed, or interrupted, by another cause for which the Contractor is responsible; or
- **.2** that an equitable adjustment is made or denied under another provision of the Contract.

§ 14.4 Termination by the Owner for Convenience

§ 14.4.1 The Owner may, at any time, terminate the Contract for the Owner's convenience and without cause.

§ 14.4.2 Upon receipt of notice from the Owner of such termination for the Owner's convenience, the Contractor shall

- **.1** cease operations as directed by the Owner in the notice;

SAMPLE

AIA Document A201™ – 2017. Copyright © 1911, 1915, 1918, 1925, 1937, 1951, 1958, 1961, 1963, 1966, 1970, 1976, 1987, 1997, 2007 and 2017 by The American Institute of Architects. **All rights reserved. WARNING: This AIA® Document is protected by U.S. Copyright Law and International Treaties. Unauthorized reproduction or distribution of this AIA® Document, or any portion of it, may result in severe civil and criminal penalties, and will be prosecuted to the maximum extent possible under the law.** This document was produced by AIA software at 08:34:20 ET on 11/19/2018 under Order No.5013131753 which expires on 10/31/2019, and is not for resale.
User Notes: (1799450219)

.2 take actions necessary, or that the Owner may direct, for the protection and preservation of the Work; and

.3 except for Work directed to be performed prior to the effective date of termination stated in the notice, terminate all existing subcontracts and purchase orders and enter into no further subcontracts and purchase orders.

§ 14.4.3 In case of such termination for the Owner's convenience, the Owner shall pay the Contractor for Work properly executed; costs incurred by reason of the termination, including costs attributable to termination of Subcontracts; and the termination fee, if any, set forth in the Agreement.

ARTICLE 15 CLAIMS AND DISPUTES

§ 15.1 Claims

§ 15.1.1 Definition

A Claim is a demand or assertion by one of the parties seeking, as a matter of right, payment of money, a change in the Contract Time, or other relief with respect to the terms of the Contract. The term "Claim" also includes other disputes and matters in question between the Owner and Contractor arising out of or relating to the Contract. The responsibility to substantiate Claims shall rest with the party making the Claim. This Section 15.1.1 does not require the Owner to file a Claim in order to impose liquidated damages in accordance with the Contract Documents.

§ 15.1.2 Time Limits on Claims

The Owner and Contractor shall commence all Claims and causes of action against the other and arising out of or related to the Contract, whether in contract, tort, breach of warranty or otherwise, in accordance with the requirements of the binding dispute resolution method selected in the Agreement and within the period specified by applicable law, but in any case not more than 10 years after the date of Substantial Completion of the Work. The Owner and Contractor waive all Claims and causes of action not commenced in accordance with this Section 15.1.2.

§ 15.1.3 Notice of Claims

§ 15.1.3.1 Claims by either the Owner or Contractor, where the condition giving rise to the Claim is first discovered prior to expiration of the period for correction of the Work set forth in Section 12.2.2, shall be initiated by notice to the other party and to the Initial Decision Maker with a copy sent to the Architect, if the Architect is not serving as the Initial Decision Maker. Claims by either party under this Section 15.1.3.1 shall be initiated within 21 days after occurrence of the event giving rise to such Claim or within 21 days after the claimant first recognizes the condition giving rise to the Claim, whichever is later.

§ 15.1.3.2 Claims by either the Owner or Contractor, where the condition giving rise to the Claim is first discovered after expiration of the period for correction of the Work set forth in Section 12.2.2, shall be initiated by notice to the other party. In such event, no decision by the Initial Decision Maker is required.

§ 15.1.4 Continuing Contract Performance

§ 15.1.4.1 Pending final resolution of a Claim, except as otherwise agreed in writing or as provided in Section 9.7 and Article 14, the Contractor shall proceed diligently with performance of the Contract and the Owner shall continue to make payments in accordance with the Contract Documents.

§ 15.1.4.2 The Contract Sum and Contract Time shall be adjusted in accordance with the Initial Decision Maker's decision, subject to the right of either party to proceed in accordance with this Article 15. The Architect will issue Certificates for Payment in accordance with the decision of the Initial Decision Maker.

§ 15.1.5 Claims for Additional Cost

If the Contractor wishes to make a Claim for an increase in the Contract Sum, notice as provided in Section 15.1.3 shall be given before proceeding to execute the portion of the Work that is the subject of the Claim. Prior notice is not required for Claims relating to an emergency endangering life or property arising under Section 10.4.

§ 15.1.6 Claims for Additional Time

§ 15.1.6.1 If the Contractor wishes to make a Claim for an increase in the Contract Time, notice as provided in Section 15.1.3 shall be given. The Contractor's Claim shall include an estimate of cost and of probable effect of delay on progress of the Work. In the case of a continuing delay, only one Claim is necessary.

SAMPLE

AIA Document A201™ – 2017. Copyright © 1911, 1915, 1918, 1925, 1937, 1951, 1958, 1961, 1963, 1966, 1970, 1976, 1987, 1997, 2007 and 2017 by The American Institute of Architects. **All rights reserved. WARNING: This AIA® Document is protected by U.S. Copyright Law and International Treaties. Unauthorized reproduction or distribution of this AIA® Document, or any portion of it, may result in severe civil and criminal penalties, and will be prosecuted to the maximum extent possible under the law.** This document was produced by AIA software at 08:34:20 ET on 11/19/2018 under Order No.5013131753 which expires on 10/31/2019, and is not for resale.
User Notes:

(1799450219)

§ 15.1.6.2 If adverse weather conditions are the basis for a Claim for additional time, such Claim shall be documented by data substantiating that weather conditions were abnormal for the period of time, could not have been reasonably anticipated, and had an adverse effect on the scheduled construction.

§ 15.1.7 Waiver of Claims for Consequential Damages

The Contractor and Owner waive Claims against each other for consequential damages arising out of or relating to this Contract. This mutual waiver includes

- **.1** damages incurred by the Owner for rental expenses, for losses of use, income, profit, financing, business and reputation, and for loss of management or employee productivity or of the services of such persons; and
- **.2** damages incurred by the Contractor for principal office expenses including the compensation of personnel stationed there, for losses of financing, business and reputation, and for loss of profit, except anticipated profit arising directly from the Work.

This mutual waiver is applicable, without limitation, to all consequential damages due to either party's termination in accordance with Article 14. Nothing contained in this Section 15.1.7 shall be deemed to preclude assessment of liquidated damages, when applicable, in accordance with the requirements of the Contract Documents.

§ 15.2 Initial Decision

§ 15.2.1 Claims, excluding those where the condition giving rise to the Claim is first discovered after expiration of the period for correction of the Work set forth in Section 12.2.2 or arising under Sections 10.3, 10.4, and 11.5, shall be referred to the Initial Decision Maker for initial decision. The Architect will serve as the Initial Decision Maker, unless otherwise indicated in the Agreement. Except for those Claims excluded by this Section 15.2.1, an initial decision shall be required as a condition precedent to mediation of any Claim. If an initial decision has not been rendered within 30 days after the Claim has been referred to the Initial Decision Maker, the party asserting the Claim may demand mediation and binding dispute resolution without a decision having been rendered. Unless the Initial Decision Maker and all affected parties agree, the Initial Decision Maker will not decide disputes between the Contractor and persons or entities other than the Owner.

§ 15.2.2 The Initial Decision Maker will review Claims and within ten days of the receipt of a Claim take one or more of the following actions: (1) request additional supporting data from the claimant or a response with supporting data from the other party, (2) reject the Claim in whole or in part, (3) approve the Claim, (4) suggest a compromise, or (5) advise the parties that the Initial Decision Maker is unable to resolve the Claim if the Initial Decision Maker lacks sufficient information to evaluate the merits of the Claim or if the Initial Decision Maker concludes that, in the Initial Decision Maker's sole discretion, it would be inappropriate for the Initial Decision Maker to resolve the Claim.

§ 15.2.3 In evaluating Claims, the Initial Decision Maker may, but shall not be obligated to, consult with or seek information from either party or from persons with special knowledge or expertise who may assist the Initial Decision Maker in rendering a decision. The Initial Decision Maker may request the Owner to authorize retention of such persons at the Owner's expense.

§ 15.2.4 If the Initial Decision Maker requests a party to provide a response to a Claim or to furnish additional supporting data, such party shall respond, within ten days after receipt of the request, and shall either (1) provide a response on the requested supporting data, (2) advise the Initial Decision Maker when the response or supporting data will be furnished, or (3) advise the Initial Decision Maker that no supporting data will be furnished. Upon receipt of the response or supporting data, if any, the Initial Decision Maker will either reject or approve the Claim in whole or in part.

§ 15.2.5 The Initial Decision Maker will render an initial decision approving or rejecting the Claim, or indicating that the Initial Decision Maker is unable to resolve the Claim. This initial decision shall (1) be in writing; (2) state the reasons therefor; and (3) notify the parties and the Architect, if the Architect is not serving as the Initial Decision Maker, of any change in the Contract Sum or Contract Time or both. The initial decision shall be final and binding on the parties but subject to mediation and, if the parties fail to resolve their dispute through mediation, to binding dispute resolution.

§ 15.2.6 Either party may file for mediation of an initial decision at any time, subject to the terms of Section 15.2.6.1.

SAMPLE

AIA Document A201™ – 2017. Copyright © 1911, 1915, 1918, 1925, 1937, 1951, 1958, 1961, 1963, 1966, 1970, 1976, 1987, 1997, 2007 and 2017 by The American Institute of Architects. **All rights reserved. WARNING: This AIA® Document is protected by U.S. Copyright Law and International Treaties. Unauthorized reproduction or distribution of this AIA® Document, or any portion of it, may result in severe civil and criminal penalties, and will be prosecuted to the maximum extent possible under the law.** This document was produced by AIA software at 08:34:20 ET on 11/19/2018 under Order No.5013131753 which expires on 10/31/2019, and is not for resale.
User Notes: (1799450219)

§ 15.2.6.1 Either party may, within 30 days from the date of receipt of an initial decision, demand in writing that the other party file for mediation. If such a demand is made and the party receiving the demand fails to file for mediation within 30 days after receipt thereof, then both parties waive their rights to mediate or pursue binding dispute resolution proceedings with respect to the initial decision.

§ 15.2.7 In the event of a Claim against the Contractor, the Owner may, but is not obligated to, notify the surety, if any, of the nature and amount of the Claim. If the Claim relates to a possibility of a Contractor's default, the Owner may, but is not obligated to, notify the surety and request the surety's assistance in resolving the controversy.

§ 15.2.8 If a Claim relates to or is the subject of a mechanic's lien, the party asserting such Claim may proceed in accordance with applicable law to comply with the lien notice or filing deadlines.

§ 15.3 Mediation

§ 15.3.1 Claims, disputes, or other matters in controversy arising out of or related to the Contract, except those waived as provided for in Sections 9.10.4, 9.10.5, and 15.1.7, shall be subject to mediation as a condition precedent to binding dispute resolution.

§ 15.3.2 The parties shall endeavor to resolve their Claims by mediation which, unless the parties mutually agree otherwise, shall be administered by the American Arbitration Association in accordance with its Construction Industry Mediation Procedures in effect on the date of the Agreement. A request for mediation shall be made in writing, delivered to the other party to the Contract, and filed with the person or entity administering the mediation. The request may be made concurrently with the filing of binding dispute resolution proceedings but, in such event, mediation shall proceed in advance of binding dispute resolution proceedings, which shall be stayed pending mediation for a period of 60 days from the date of filing, unless stayed for a longer period by agreement of the parties or court order. If an arbitration is stayed pursuant to this Section 15.3.2, the parties may nonetheless proceed to the selection of the arbitrator(s) and agree upon a schedule for later proceedings.

§ 15.3.3 Either party may, within 30 days from the date that mediation has been concluded without resolution of the dispute or 60 days after mediation has been demanded without resolution of the dispute, demand in writing that the other party file for binding dispute resolution. If such a demand is made and the party receiving the demand fails to file for binding dispute resolution within 60 days after receipt thereof, then both parties waive their rights to binding dispute resolution proceedings with respect to the initial decision.

§ 15.3.4 The parties shall share the mediator's fee and any filing fees equally. The mediation shall be held in the place where the Project is located, unless another location is mutually agreed upon. Agreements reached in mediation shall be enforceable as settlement agreements in any court having jurisdiction thereof.

§ 15.4 Arbitration

§ 15.4.1 If the parties have selected arbitration as the method for binding dispute resolution in the Agreement, any Claim subject to, but not resolved by, mediation shall be subject to arbitration which, unless the parties mutually agree otherwise, shall be administered by the American Arbitration Association in accordance with its Construction Industry Arbitration Rules in effect on the date of the Agreement. The Arbitration shall be conducted in the place where the Project is located, unless another location is mutually agreed upon. A demand for arbitration shall be made in writing, delivered to the other party to the Contract, and filed with the person or entity administering the arbitration. The party filing a notice of demand for arbitration must assert in the demand all Claims then known to that party on which arbitration is permitted to be demanded.

§ 15.4.1.1 A demand for arbitration shall be made no earlier than concurrently with the filing of a request for mediation, but in no event shall it be made after the date when the institution of legal or equitable proceedings based on the Claim would be barred by the applicable statute of limitations. For statute of limitations purposes, receipt of a written demand for arbitration by the person or entity administering the arbitration shall constitute the institution of legal or equitable proceedings based on the Claim.

§ 15.4.2 The award rendered by the arbitrator or arbitrators shall be final, and judgment may be entered upon it in accordance with applicable law in any court having jurisdiction thereof.

SAMPLE

AIA Document A201™ – 2017. Copyright © 1911, 1915, 1918, 1925, 1937, 1951, 1958, 1961, 1963, 1966, 1970, 1976, 1987, 1997, 2007 and 2017 by The American Institute of Architects. **All rights reserved. WARNING: This AIA® Document is protected by U.S. Copyright Law and International Treaties. Unauthorized reproduction or distribution of this AIA® Document, or any portion of it, may result in severe civil and criminal penalties, and will be prosecuted to the maximum extent possible under the law.** This document was produced by AIA software at 08:34:20 ET on 11/19/2018 under Order No.5013131753 which expires on 10/31/2019, and is not for resale.
User Notes: (1799450219)

§ 15.4.3 The foregoing agreement to arbitrate and other agreements to arbitrate with an additional person or entity duly consented to by parties to the Agreement, shall be specifically enforceable under applicable law in any court having jurisdiction thereof.

§ 15.4.4 Consolidation or Joinder

§ 15.4.4.1 Subject to the rules of the American Arbitration Association or other applicable arbitration rules, either party may consolidate an arbitration conducted under this Agreement with any other arbitration to which it is a party provided that (1) the arbitration agreement governing the other arbitration permits consolidation, (2) the arbitrations to be consolidated substantially involve common questions of law or fact, and (3) the arbitrations employ materially similar procedural rules and methods for selecting arbitrator(s).

§ 15.4.4.2 Subject to the rules of the American Arbitration Association or other applicable arbitration rules, either party may include by joinder persons or entities substantially involved in a common question of law or fact whose presence is required if complete relief is to be accorded in arbitration, provided that the party sought to be joined consents in writing to such joinder. Consent to arbitration involving an additional person or entity shall not constitute consent to arbitration of any claim, dispute or other matter in question not described in the written consent.

§ 15.4.4.3 The Owner and Contractor grant to any person or entity made a party to an arbitration conducted under this Section 15.4, whether by joinder or consolidation, the same rights of joinder and consolidation as those of the Owner and Contractor under this Agreement.

SAMPLE

AIA Document A201™ – 2017. Copyright © 1911, 1915, 1918, 1925, 1937, 1951, 1958, 1961, 1963, 1966, 1970, 1976, 1987, 1997, 2007 and 2017 by The American Institute of Architects. **All rights reserved. WARNING: This AIA® Document is protected by U.S. Copyright Law and International Treaties. Unauthorized reproduction or distribution of this AIA® Document, or any portion of it, may result in severe civil and criminal penalties, and will be prosecuted to the maximum extent possible under the law.** This document was produced by AIA software at 08:34:20 ET on 11/19/2018 under Order No.5013131753 which expires on 10/31/2019, and is not for resale.

User Notes: (1799450219)

SECTION 00 73 13

SUPPLEMENTARY GENERAL CONDITIONS A201-2017

The following supplements modify the "General Conditions of the Contract for Construction," AIA Document A201-2017. Where a portion of the General Conditions is modified or deleted by the Supplementary Conditions, the unaltered portions of the General Conditions shall remain in effect.

TABLE OF ARTICLES

1. GENERAL PROVISIONS

2. OWNER

3. CONTRACTOR

4. ADMINISTRATION OF THE CONTRACT

5. SUBCONTRACTORS

6. CONSTRUCTION BY OWNER OR BY SEPARATE CONTRACTORS

7. CHANGES IN THE WORK

8. TIME

9. PAYMENTS AND COMPLETION

10. PROTECTION OF PERSONS AND PROPERTY

11. INSURANCE AND BONDS

12. UNCOVERING AND CORRECTION OF WORK

13. MISCELLANEOUS PROVISIONS

14. TERMINATION OR SUSPENSION OF THE CONTRACT

15. CLAIMS AND DISPUTES

ARTICLE 1: GENERAL PROVISIONS

1.1 BASIC DEFINITIONS

1.1.1 THE CONTRACT DOCUMENTS

Strike the last sentence of Section 1.1.1 in its entirety and replace with the following:

"The Contract Documents also include Advertisement for Bid, Instructions to Bidder, sample forms, the Bid Form, the Contractor's completed Bid and the Award Letter."

Add the following Section:

"1.1.1.1 In the event of conflict or discrepancies among the Contract Documents, the Documents prepared by the State of Delaware, Division of Facilities Management shall take precedence over all other documents."

1.1.8 INITIAL DECISION MAKER

Strike the last sentence of Section 1.1.8 in its entirety and add the following to the end of the remaining sentence:

" and certify termination of the Agreement under Section14.2.2."

1.2 CORRELATION AND INTENT OF THE CONTRACT DOCUMENTS

1.2.1.1 Insert "if possible" at the end of the second sentence.

Add the following Sections:

"1.2.4 In the case of an inconsistency between the Drawings and the Specifications, or within either document not clarified by addendum, the better quality or greater quantity of work shall be provided in accordance with the Architect's interpretation."

"1.2.5The word "PROVIDE" as used in the Contract Documents shall mean "FURNISH AND INSTALL" and shall include, without limitation, all labor, materials, equipment, transportation, services and other items required to complete the Work."

"1.2.6The word "PRODUCT" as used in the Contract Documents means all materials, systems and equipment."

1.5 OWNERSHIP AND USE OF DRAWINGS, SPECIFICATIONS AND OTHER INSTRUMENTS OF SERVICE

Strike Section 1.5.1 in its entirety and replace with the following:

"All pre-design studies, drawings, specifications and other documents, including those in electronic form, prepared by the Architect under this Agreement are, and shall remain, the property

of the Owner whether the Project for which they are made is executed or not. Such documents may be used by the Owner to construct one or more like Projects without the approval of, or additional compensation to, the Architect. The Contractor, Subcontractors, Sub-subcontractors, and Material or Equipment Suppliers are authorized to use and reproduce applicable portions of the Drawings, Specifications and other documents prepared by the Architect and the Architect's consultants appropriate to and for use in the execution of their Work under the Contract Documents. They are not to be used by the Contractor or any Subcontractor, Sub-subcontractor or Material and Equipment Supplier on other Projects or for additions to this Project outside the scope of the Work without the specific written consent of the Owner, Architect and Architect's consultants.

The Architect shall not be liable for injury or damage resulting from the re-use of drawings and specifications if the Architect is not involved in the re-use Project. Prior to re-use of construction documents for a Project in which the Architect is not also involved, the Owner will remove from such documents all identification of the original Architect, including name, address and professional seal or stamp."

Strike Section 1.5.2 in its entirety.

1.7 DIGITAL DATA USE AND TRANSMISSION

Strike Section 1.7 in its entirety and replace with the following:

"The parties shall agree upon protocols governing transmission and use of Instruments of Service or any other information or documentation in digital form."

1.8 BUILDING INFORMATION MODELS USE AND RELIANCE

Strike Section 1.8 in its entirety.

ARTICLE 2: OWNER

2.2 EVIDENCE OF THE OWNERS FINANCIAL ARRANGEMENTS

Strike Section 2.2 in its entirety.

2.3 INFORMATION AND SERVICES REQUIRED OF THE OWNER

2.3.3 Strike 2.3.3 in its entirety.

2.3.4 Add the following sentence at the end of the paragraph:

"The Contractor, at their expense shall bear the costs to accurately identify the location of all underground utilities in the area of their excavation and shall bear all cost for any repairs required, out of failure to accurately identify said utilities."

Strike Section 2.3.6 in its entirety and replace with the following:

"2.3.6The Contractor shall be furnished free of charge (1) electronic set of the Drawings and Project Manuals. Additional sets will be furnished at the cost of reproduction, postage and handling."

2.5 OWNER'S RIGHT TO CARRY OUT THE WORK

Add ", except as outlined in Section 3.15" after the reference to "Article 15" at the end of the last sentence of the Section.

ARTICLE 3: CONTRACTOR

3.2 REVIEW OF CONTRACT DOCUMENTS AND FIELD CONDITIONS BY CONTRACTOR

3.2.2 Add "and Owner" after "report to the Architect" in the second sentence.

3.2.4 Strike "subject to Section 15.1.7" in the second sentence.

3.2.4 Strike the third sentence.

3.3 SUPERVISION AND CONSTRUCTION PROCEDURES

Add the following Sections:

"3.3.2.1 The Contractor shall immediately remove from the Work, whenever requested to do so by the Owner, any person who is considered by the Owner or Architect to be incompetent or disposed to be so disorderly, or who for any reason is not satisfactory to the Owner, and that person shall not again be employed on the Work without the consent of the Owner or the Architect."

"3.3.4 The Contractor must provide suitable storage facilities at the Site for the proper protection and safe storage of their materials, or as otherwise identified by the specifications. Consult the Owner and the Architect before storing any materials."

"3.3.5 When any room is used as a shop, storeroom, office, etc., by the Contractor or Subcontractor(s) during the construction of the Work, the Contractor making use of these areas will be held responsible for any repairs, patching or cleaning arising from such use."

3.4 LABOR AND MATERIALS

Add the Following Sections:

"3.4.4 Before starting the Work, each Contractor shall carefully examine all preparatory Work that has been executed to receive their Work. Check carefully, by whatever means are required, to insure that its Work and adjacent, related Work, will finish to proper contours, planes and levels. Promptly notify the Architect & Owner of any defects or imperfections in preparatory Work which

will in any way affect satisfactory completion of its Work. Absence of such notification will be construed as an acceptance of preparatory Work and later claims of defects will not be recognized."

"3.4.5 Under no circumstances shall the Contractor's Work proceed prior to preparatory Work having been completely cured, dried and/or otherwise made satisfactory to receive this Work. Responsibility for timely installation of all materials rests solely with the Contractor responsible for that Work, who shall maintain coordination at all times."

3.5 WARRANTY

Add the following Sections:

"3.5.3 The Contractor will guarantee all materials and workmanship against original defects, except injury from proper and usual wear when used for the purpose intended, for two years after Acceptance by the Owner, and will maintain all items in perfect condition during the period of warranty."

"3.5.4 Defects appearing during the period of warranty will be made good by the Contractor at his expense upon demand of the Owner, it being required that all work will be in perfect condition when the period of warranty will have elapsed."

"3.5.5 Upon notification by the Owner of a defect covered by the Contractor's warranty, the Contractor shall respond within 4 hours of the notification."

"3.5.6 In addition to the General Warranty there are other warranties required for certain items for different periods of time than the two years as above, and are particularly so stated in that part of the specifications referring to same. The said warranties will commence at the same time as the General Warranty."

"3.5.7 If the Contractor fails to remedy any failure, defect or damage within a reasonable time after receipt of notice, the Owner will have the right to replace, repair, or otherwise remedy the failure, defect or damage at the Contractor's expense."

3.8 ALLOWANCES

Add the following Section:

"3.8.1.1 For costs to be covered under a project allowance, (included in the schedule of values) the Contractor shall submit a summary of those costs anticipated and an Allowance Access Authorization Form to the Architect and Owner, reflecting the projected costs. The Allowance Access Authorization Form must be signed by the Owner prior to initiating any work associated with the allowance."

3.10 CONTRACTOR'S CONSTRUCTION AND SUBMITTAL SCHEDULES

3.10.1 Add "estimated" after "and the" and before "date of" in the second sentence.

3.10.2 Strike "and thereafter as necessary to maintain a current submittal schedule" in the first sentence.

3.11 DOCUMENTS AND SAMPLES AT THE SITE

Add the following Sections:

"3.11.1 During the course of the Work, the Contractor shall maintain a record set of drawings on which the Contractor shall mark the actual physical location of all piping, valves, equipment, conduit, outlets, access panels, controls, actuators, including all appurtenances that will be concealed once construction is complete, etc., including all invert elevations."

"3.11.2 At the completion of the project, the Contractor shall obtain a set of the conformed contract drawings from the Architect, and neatly transfer all information outlined in 3.11.1 to provide a complete record of the as-built conditions."

"3.11.3 Upon completion of the work noted in 3.11.2 the contractor shall schedule a meeting with the Architect/Engineer and Owner to review the final record drawings and closeout documents prior to submission. After this meeting the Contractor shall make adjustments per the review, and submit one (1) original markup and (2) copies of the red line drawings (as-built conditions, to the Owner and one (1) print to the Architect. In addition, attach one complete set of the as-built documents to each of the Operating and Maintenance Instructions/Manuals. The Contractor will include (2) USB drives, each containing all "red line drawings (as-built) and Closeout Documents properly tabbed in accordance with closeout requirements as defined elsewhere in the contract documents."

3.12 SHOP DRAWINGS, PRODUCT DATA AND SAMPLES

3.12.10.2 Strike "If the Contract Documents require" from the beginning of the sentence.

3.12.10.2 Strike "to" between "professional" and certify" and replace with "shall".

3.17 Insert "indemnify and" between "shall" and "hold" in the second sentence.

ARTICLE 4: ADMINISTRATION OF THE CONTRACT

4.2 ADMINISTRATION OF THE CONTRACT

4.2.7 Strike the first sentence and replace with the following:

"The Architect will review and approve or take other appropriate action upon the Contractor's submittals such as Shop Drawings, Product Data and Samples for the purpose of checking for conformance with the Contract Documents."

4.2.7 Strike the second sentence and replace with the following:

"The Architect's action will be taken with such reasonable promptness as to cause no delay in the Work in the activities of the Owner, Contractor or separate Contractors, while allowing sufficient time in the Owner's professional judgment to permit adequate review."

Add the following Section:

"4.2.10.1 There will be no full-time Project Representative provided by the Owner or Architect on this project."

"4.2.13 Add "and in compliance with all local requirements." to the end of the sentence."

ARTICLE 5: SUBCONTRACTORS

5.2 AWARD OF SUBCONTRACTS AND OTHER CONTRACTS FOR PORTIONS OF THE WORK

5.2.3 Strike Section 5.2.3 in its entirety and replace with the following:

"If the Owner or Architect has reasonable objection to a person or entity proposed by the Contractor, the Contractor shall propose another to whom the Owner or Architect has no reasonable objection, subject to the statutory requirements of 29 Delaware Code § 6962(d)(10)b.3 and 4."

5.2.4 Strike Section 5.2.4 in its entirety and replace with the following:

"The Contractor may not substitute any Subcontractor listed in its Bid unless the Contractor complies with the requirements of 29 Delaware Code § 6962(d)(10)b.3 and 4. Failure to comply with this requirement shall subject the Contractor to a penalty as outlined in Section 5.2 of the Owner's General Requirements."

Add the following Section:

"5.2.5 The Contractor shall comply and shall ensure all Subcontractors comply with all requirements for drug testing as set forth in TITLE 19 LABOR DELAWARE ADMINISTRATIVE CODE 4000 Office of Management and Budget 4100 Division of Facilities Management **4104 Regulations for the Drug Testing of Contractor and Subcontractor Employees Working on Large Public Works Projects."**

ARTICLE 6: CONSTRUCTION BY OWNER OR BY SEPARATE CONTRACTORS

6.1 OWNER'S RIGHT TO PERFORM CONSTRUCTION AND TO AWARD SEPARATE CONTRACTS

6.1.1 Strike "and waiver of subrogation" from the end of the second sentence.

6.1.4 Strike Section 6.1.4 in its entirety.

6.2 MUTUAL RESPONSIBILITY

6.2.3 Strike "shall" and replace with "may" in the second sentence.

ARTICLE 7: CHANGES IN THE WORK

(SEE ARTICLE 7: CHANGES IN WORK IN THE STATE OF DELAWARE DIVISION OF FACILITIES MANAGEMENT GENERAL REQUIREMENTS)

7.2 CHANGE ORDERS

Add the following Sections:

"7.2.2 In addition to the above:

7.2.2.1 The General Contractor is allowed a fifteen percent (15%) markup for overhead and profit for additional work performed by the General Contractor's own forces.

7.2.2.2 For additional subcontractor work, the Subcontractor is allowed a fifteen (15) percent overhead and profit on change order work above and beyond the direct costs stated previously. To this amount, the General Contractor will be allowed a mark-up not exceeding seven- and one-half percent (7.5%) on the subcontractor's work.

7.2.2.3 Where the Third Tier Contractor is going to be completing the additional work, the Third-Tier contractor will be allowed a markup of fifteen percent (15%) overhead and profit on changes order work above and beyond the direct costs stated previously. To this amount, the Subcontractor will be allowed a markup not to exceed seven and one-half percent (7.5%) on the Third-Tier Contractor's work and the General Contractor will be allowed a markup not to exceed seven and one-half percent (7.5%) of the amount of the Subcontractor's markup.

7.2.2.4 No additional costs shall be allowed for changes related to the Contractor's onsite superintendent/staff, or project manager, unless a change in the work changes the project duration and is identified by the CPM schedule. There will be no other costs associated with the change order.

7.2.2.5 These markups shall include all costs including, but not limited to: overhead, profit, bonds, insurance, supervision, etc."

7.3.4.1 Strike "and other employee costs approved by the Architect" after "worker's compensation insurance,"

7.3.4.4 Add "work attributable to the" before "change" at the end of the sentence.

7.4 MINOR CHANGES IN THE WORK
Add "unless such changes are approved" at the end of the third sentence.

ARTICLE 8: TIME

8.2 PROGRESS AND COMPLETION

8.2.1 Add the following Section:

"8.2.1.1 Refer to Project Specifications Section SUMMARY OF WORK for Contract time requirements."

8.2.2 After "by the Contractor" strike "and" and insert "to".

8.2.4 Add the following Section:

"8.2.4 If the Work falls behind the Progress Schedule as submitted by the Contractor, the Contractor shall employ additional labor and/or equipment necessary to bring the Work into compliance with the Progress Schedule at no additional cost to the Owner."

8.3 DELAYS AND EXTENSION OF TIME

8.3.1 Strike "binding dispute resolution" and insert "any and all remedies at law or in equity".

Add the following Section:

"8.3.2.1 The Contractor shall update the status of the suspension, delay, or interruption of the Work with each Application for Payment. (The Contractor shall report the termination of such cause immediately upon the termination thereof.) Failure to comply with this procedure shall constitute a waiver for any claim for adjustment of time or price based upon said cause."

Strike Section 8.3.3 in its entirety and replace with the following:

8.3.3 "Except in the case of a suspension of the Work directed by the Owner, an extension of time under the provisions of Section 8.3.1 shall be the Contractor's sole remedy in the progress of the Work and there shall be no payment or compensation to the Contractor for any expense or damage resulting from the delay."

Add the following Section:

"8.3.4 By permitting the Contractor to work after the expired time for completion of the project, the Owner does not waive their rights under the Contract."

ARTICLE 9: PAYMENTS AND COMPLETION

9.2 SCHEDULE OF VALUES

Add the following Sections:

"9.2.1 The Schedule of Values shall be submitted using AIA Document G703, Continuation Sheet to G702."

"9.2.2 The Schedule of Values is to include a line item for Project Closeout Document Submittal. The value of this item is to be no less than 1.5% of the initial contract amount."

9.3 APPLICATIONS FOR PAYMENT

9.3.1 Strike Section 9.3.1 in its entirety and replace with the following:

"At least ten days before the date established for each progress payment, the Contractor shall submit to the Architect an itemized Application for Payment prepared in accordance with the schedule of values for completed portions of the Work. The application shall be notarized, and supported by all data substantiating the Contractor's right to payment that the Owner or Architect require, such as copies of requisitions, and releases and waivers of liens from Subcontractors and suppliers, and shall reflect retainage."

Add the following Sections:

"9.3.1.3 Application for Payment shall be submitted on AIA Document G702 "Application and Certificate for Payment", supported by AIA Document G703 "Continuation Sheet". Said Applications shall be fully executed and notarized."

"9.3.4 Until Closeout Documents have been received and outstanding items completed the Owner will pay 95% (ninety-five percent) of the amount due the Contractor on account of progress payments."

"9.3.5 The Contractor shall provide a current and updated Progress Schedule to the Architect with each Application for Payment. Failure to provide Schedule will be just cause for rejection of Application for Payment."

9.5 DECISIONS TO WITHHOLD CERTIFICATION

Add the following Subsections to 9.5.1:

.8 failure to provide a current Progress Schedule;
.9 a lien or attachment is filed;
.10 failure to comply with mandatory requirements for maintaining Record Documents.

9.6 PROGRESS PAYMENTS

9.6.1 Strike Section 9.6.1 in its entirety and replace with the following:

"9.6.1 After the Architect has approved and issued a Certificate for Payment, payment shall be made by the Owner within 30 days after Owner's receipt of the Certificate for Payment."

9.6.8 Strike "Provided the Owner has fulfilled its payment obligations under the Contract Documents," in the first sentence.

9.7 FAILURE OF PAYMENT

Strike Section 9.7 in its entirety and replace with the following:

"If the Architect does not issue a Certificate for Payment, through no fault of the Contractor, within fourteen days after receipt of the Contractor's Application for Payment, or if the Owner does not

pay the Contractor within thirty days after the date established in the Contract Documents, the amount certified by the Architect, then the Contractor may, upon thirty additional days' notice to the Owner and Architect, stop the Work until payment of the amount owing has been received. The Contract Time shall be extended appropriately and the Contract Sum shall be increased by the amount of the Contractor's reasonable costs of shutdown, delay and start-up, plus interest as provided for in the Contract Documents."

9.8 SUBSTANTIAL COMPLETION

9.8.3 At the end of Section 9.8.3, add the following sentence:

"If the Architect is required to make more than 2 inspections of the same portion of work, the Contractor shall be responsible for all costs associated with subsequent inspections including but not limited to any Architect's fees."

9.8.5 Strike "shall" and insert "may" in the second sentence.

9.8.5 Insert "1/2 of the" after "make payment of" in the second sentence.

9.9 PARTIAL OCCUPANCY OR USE

9.9.1 Strike the the first sentence and replace with the following (the remainder of the Section remains as written):
"The Owner may occupy or use any completed or partially completed portion of the Work at any stage when such portion is designated by separate agreement with the Contractor, provided such occupancy or use authorized by public authorities having jurisdiction over the Project."

9.10.2 Strike "to remain in force after final payment is currently in effect" after "required by the Contract Documents" and replace with "shall remain in force until final payment is completed" in the first sentence.

9.10.4.4 Strike "if permitted by the Contract Documents,"

ARTICLE 10: PROTECTION OF PERSONS AND PROPERTY

10.1 SAFETY PRECAUTIONS AND PROGRAMS

Add the following Sections:

10.1.1 Each Contractor shall develop a safety program in accordance with the Occupational Safety and Health Act of 1970. A copy of said plan shall be furnished to the Owner and Architect prior to the commencement of that Contractor's Work.

10.1.2 Each Contractor shall appoint a Safety Representative. Safety Representatives shall be someone who is on site on a full time basis. If deemed necessary by the Owner or Architect, Contractor Safety meetings will be scheduled. The attendance of all Safety Representatives will be required. Minutes will be recorded of said meetings by the Contractor and will be distributed to all parties as well as posted in all job offices/trailers etc.

10.2 SAFETY OF PERSONS AND PROPERTY

Add the following Section:

10.2.4.1 As required in the Hazardous Chemical Act of June 1984, all vendors supplying any material that may be defined as hazardous must provide Material Safety Data Sheets for those products. Any chemical product should be considered hazardous if it has a caution warning on the label relating to a potential physical or health hazard, if it is known to be present in the work place, and if employees may be exposed under normal conditions or in foreseeable emergency situations. Material Safety Data Sheets shall be provided directly to the Owner, along with the shipping slips that include those products.

10.2.5 Strike the second sentence in its entirety.

10.3 HAZARDOUS MATERIALS AND SUBSTANCES

10.3.3 Strike Section 10.3.3 in its entirety.

10.3.4 Insert “hazardous” in the last sentence after “handling of such” .

10.3.6 Strike Section 10.3.6 in its entirety.

ARTICLE 11: INSURANCE AND BONDS

11.1 CONTRACTOR’S INSURANCE AND BONDS

11.1.1 Strike “Owner” from the third sentence.

11.2 OWNER’S LIABILITY INSURANCE

Strike 11.2 in its entirety, except that in the case of school projects in which case Section 11.2 shall remain.

11.3 WAIVERS OF SUBROGATION

Delete Section 11.3 in its entirety

11.4 LOSS OF USE, BUSINESS INTERRUPTION, AND DELAY IN COMPLETION INSURANCE

Delete Section 11.4 in its entirety

ARTICLE 12: UNCOVERING AND CORRECTION OF WORK

12.2.2 AFTER SUBSTANTIAL COMPLETION

Add the following Section:

"12.2.2.1.1 At any time during the progress of the Work, or in any case where the nature of the defects will be such that it is not expedient to have corrected, the Owner, at its option, will have the right to deduct such sum, or sums, of money from the amount of the Contract as it considers justified to adjust the difference in value between the non-conforming work and that required under contract including any damage to the structure."

12.2.2.1 Strike all references to "one year" or "one-year" and replace with "two years".

12.2.2.2 Strike "one-year" and replace with "two years".

12.2.2.3 Strike "one-year" and replace with "two years".

12.2.5 Strike "one-year" and replaced with "two years".

ARTICLE 13: MISCELLANEOUS PROVISIONS

13.1 GOVERNING LAW

Strike the last sentence.

13.4 TESTS AND INSPECTIONS

13.4.1 Strike the last sentence and replace with the following:

"The Owner shall pay for tests, inspections, or approvals where building codes or applicable laws or regulations prohibit the Owner from delegating their cost to the Contractor."

13.5 INTEREST

Strike "the date payment is due at such rate as the parties may agree upon in writing or, in the absence thereof, at the legal rate prevailing from time to time at the place where the Project is located" and replace with "30 days of presentment of the authorized Certificate of Payment at the annual rate of 12% or 1% per month."

Insert the following Section:

"13.6 CONFLICTS WITH FEDERAL STATUTES OR REGULATIONS

13.6.1 If any provision, specifications or requirement of the Contract Documents conflict or is inconsistent with any statute, law or regulation of the government of the United State of America, the Contractor shall notify the Architect and Owner immediately upon discovery."

ARTICLE 14: TERMINATION OR SUSPENSION OF THE CONTRACT

14.1 TERMINATION BY THE CONTRACTOR

14.1.1.4 Insert ", upon the Contractors' request," after "furnish to the Contractor".

14.1.3 Strike "and profit on Work not executed, and" after "as well as reasonable overhead" and replace with ", profit, and reasonable"

14.3 SUSPENSION BY OWNER FOR CONVENIENCE

14.3.2 Strike "Adjustment of the Contract Sum shall include profit".

14.4 TERMINATION BY THE OWNER FOR CONVENIENCE

14.4.3 Strike Section 14.4.3 in its entirety and replace with the following:

"In case of such termination for the Owner's convenience, the Contractor shall be entitled to receive payment for Work executed, and reasonable costs incurred by reason of such termination along with reasonable overhead."

ARTICLE 15: CLAIMS AND DISPUTES

15.1 CLAIMS

15.1.2 TIME LIMITS ON CLAIMS

Strike the last sentence.

15.1.3 NOTICE OF CLAIM

Strike all references to "21" and replace with "45".

15.1.5 CLAIMS FOR ADDITIONAL COSTS

Strike the first sentence and replace with the following:

"Contractor shall not proceed to execute any portion of the Work that is subject to the Claim without prior approval of the costs or method of payment for the costs associated with the Claim as determined by the Architect and approved by the Owner."

15.1.7 WAIVER OF CLAIMS FOR CONSEQUENTIAL DAMAGES

Strike Section 15.1.7 in its entirety.

15.2 INITIAL DECISION

15.2.1 Strike "and binding dispute resolution" in the fourth sentence and replace with "or any and all remedies at law or in equity".

15.2.5 Strike Section 15.2.5 in its entirety and replace with the following:

"The Architect will approve or reject Claims by written decision, which shall state the reasons therefore and shall notify the parties of any change in the Contract Sum or Contract Time or both. The approval or rejection of a Claim by the Architect shall be subject to mediation and any or all remedies at law or in equity."

15.2.6 Strike Section 15.2.6 and its sub-Sections in their entirety.

15.3 MEDIATION

15.3.1 Strike "binding dispute resolution" and replace with "any or all remedies at law or in equity".

15.3.2 Strike ", shall be administered by the American Arbitration Association in accordance with its Construction Industry Mediation Procedure in effect on the date of the Agreement," in the first sentence.

15.3.2 Strike all references to "binding dispute resolution" and replace with "any or all remedies at law and in equity".

15.3.3 Strike Section 15.3.3 in its entirety.

15.4 ARBITRATION

Strike Section 15.4 and its Subsections in their entirety.

END OF SECTION

This page intentionally left blank.

SECTION 00 73 43

WAGE RATE REQUIREMENTS

PART 1 - GENERAL

A. A certified copy of the March 2026, Prevailing Wage Rates for Building Construction are included in this section. In the event that a contract is not executed within one hundred twenty (120) days from the earliest date the specifications are published, the rates in effect at the time of the execution of the contract shall be the applicable rates for the project.

B. The Contractor will not be entitled to increases in the contract sum as a result of changing Prevailing Wage Rates which may occur during the bidding or construction phases of this project.

C. Public agencies (covered by the provisions of 29 Del.C. §6960) are required to use the rates which are in effect on the date of the publication of specifications for a given project. "Date of publication" means the date on which the specifications are made available to interested persons (as specified in the published bid notice). In the event that a contract is not executed within one hundred and twenty (120) days from the earliest date the specifications were published, the rates in effect at the time of the execution of the contract shall be the applicable rates for the project.

D. It is the contractor=s responsibility to:

1. Verify with the Department of Labor that the State of Delaware prevailing wage rate schedule presented by the architect inside the project manual is **current** and **certified** for use for each project/contract**.**
2. Post in prominent locations at each contract's work site all prevailing wage rate schedules applicable to said contract.
3. Verify that the contractor and sub-contractors furnish weekly the sworn payroll information for each said Public Construction Contract to the Delaware Department of Labor.

E. The following sample payroll report is provided for informational purposes only and is to be utilized as required by the State of Delaware Department of Labor.

PART 2 - PRODUCTS

Not Used

PART 3 - EXECUTION

Not Used

END OF SECTION

This page intentionally left blank.

PAYROLL REPORT

NAME OF CONTRACTOR ☐ **OR SUBCONTRACTOR** ☐

Delaware Department of Labor

DIA-Office of Labor Law Enforcement
4425 N. Market Street-3rd Floor
Wilmington, DE 19802
302-761-8320

ADDRESS

PHONE:

PROJECT AND LOCATION

WEEK ENDING DATE

CONTRACT NUMBER

DATE OF PREVAILING WAGE DETERMINATION USED ON THIS PROJECT:

NAME, ADDRESS AND SOCIAL SECURITY NUMBER OF EMPLOYEE	WORK CLASSIFICATION		DAY & DATE & HOURS WORKED EACH DAY									GROSS AMOUNT EARNED	DEDUCTIONS					NET WAGES PAID	HOURLY VALUE OF FRINGES
										TOTAL HOURS & RATE OF PAY									
			M	T	W	T	F	S	S	HOURS	RATE		FICA	FWT	SWT				
1.		S																	
		O																	
2.		S																	
		O																	
3.		S																	
		O																	
4.		S																	
		O																	
5.		S																	
		O																	
6.		S																	
		O																	
7.		S																	
		O																	
8.		S																	
		O																	

DATE _____

I,_____ _____
(Name of signatory party) (Title)

do hereby state:

1. That I pay or supervise the payment of persons employed by

_____on the
(Contractor or Subcontractor)

_____:
(public project)

that during the payroll period commencing on the_____day of

_____, 20_____and ending on the_____day of

_____, 20_____all persons employed on said project

have been paid the full weekly wages earned, that no rebates have been or will be made either directly or indirectly to or on behalf of the contractor or subcontractor from the full weekly wages earned by any person and that no deductions have been made either directly or indirectly from the full wages earned by any person, other than permissible deductions as defined in the prevailing wage regulations of the State of Delaware.

2. That any payrolls otherwise under this contract required to be submitted for the above period are correct and complete; that the wage rates for laborers or mechanics contained therein are not less than applicable wage rates contained in any wage determination incorporated into the contract; that the classifications set forth therein for each laborer or mechanic conform with the work performed.

3. That any apprentices employed in the above period are duly registered in a bona fide apprenticeship program registered with a state apprenticeship agency recognized by the Bureau of Apprenticeship and Training, United States Department of Labor, and that the worksite ratio of apprentices to mechanics does not exceed the ratio permitted by the prevailing wage regulations of the State of Delaware.

An employer who fails to submit sworn payroll information to the Department of Labor weekly shall be subject to fines of $1,000.00 and $5,000. for each violation.

List only those fringe benefits:

For which the employer has paid; and
Which have been used to offset the full prevailing wage rate.

(See Delaware Prevailing Wage Regulations for explanation of how hourly value of benefits is the be computed.)

HOURLY COST OF BENEFITS
(List in same order shown on front of record)

Employee							
1.							
2.							
3.							
4.							
5.							
6.							
7.							
8.							

I hereby certify that the foregoing information is true and correct to the best of m knowledge and belief. I realize that making a false statement under oath is a crime in State of Delaware

_____
Signature

STATE OF _____

COUNTY OF _____

SWORN TO AND SUBSCRIBED BEFORE ME, A NOTARY PUBLIC,

THIS_____DAY OF_____, A.D. 20_____.

_____
Notary Public

PAYROLL REPORT

NAME OF CONTRACTOR ☑ **OR SUBCONTRACTOR** ☐

ABC Contractors

Delaware Department of Labor
State of Delaware
Department of Labor
4425 N. Market Street
Wilmington, DE 19802
302-761-8200

ADDRESS:
210 Lakeview Road
Sometown, DE 99999

PHONE :
(555) 555-5555

PROJECT AND LOCATION
Sample project for demonstration only

WEEK ENDING DATE
07/21/2013

CONTRACT NUMBER
54-67-89

DATE OF PREVAILING WAGE DETERMINATION BEING USED ON THIS PROJECT:
01/01/2012

	NAME, ADDRESS, AND SOCIAL SECURITY NUMBER OF EMPLOYEE	WORK CLASSIFICATION		DAY & DATE & HOURS WORKED EACH DAY									GROSS AMOUNT EARNED	DEDUCTIONS					NET WAGES PAID	HOURLY VALUE OF FRINGES
				07/15	07/16	07/17	07/18	07/19	07/20	07/21	TOTAL HOURS & RATE OF PAY									
				M	T	W	T	F	S	S	HOURS	RATE	PROJECT / ALL	FICA	FWT	SWT	LOCAL	OTHER		
1.	Jane Doe 71 Pineapple Lane Sometown, DE 99999 xxx-xx-9999	Pipe Fitter	S	0	8	8	8	0	0	0	24	18.00	432.00	55.08	96.83	29.06	0.00	38.88	500.15	10.50
			O	0	0	0	0	0	0	0	0	27.00	720.00							
2.	John Doe P.O. Box 999 Sometown, DE 99999 xxx-xx-9999	Sheetmetal Worker	S	0	8	8	8	0	0	0	24	20.00	480.00	61.20	116.83	33.50	0.00	43.20	545.27	10.50
			O	0	0	0	0	0	0	0	0	30.00	800.00							
3.	John Q. Public 2300 Arena Avenue Sometown, DE 99999 xxx-xx-9999	Truck Driver	S	0	8	8	8	0	0	0	24	22.00	528.00	67.32	72.53	30.24	0.00	47.52	662.39	10.50
			O	0	0	0	0	0	0	0	0	33.00	880.00							
4.	John Smith 36 Mimosa Lane Sometown, DE 99999 xxx-xx-9999	Laborer	S	0	8	8	8	0	0	0	24	14.00	336.00	42.84	58.38	18.06	0.00	30.24	410.48	10.50
			O	0	0	0	0	0	0	0	0	21.00	560.00							
5.			S																	
			O																	
6.			S																	
			O																	
7.			S																	
			O																	
8.			S																	
			O																	

DATE 07/25/2013

I, Cory Smith, President
(Name of Signatory Party) (Title)

do hereby state:

1. That I pay or supervise the payment of the persons employed by **ABC Contractors** on the
(Contractor or Subcontractor)
public project #123 ;
(public project)
that during the payroll period commencing on the 15 day of July, 2013, and ending on the 21 day of July, 2013, all persons employed on said project have been paid the full weekly wages earned, that no rebates have been or will be made either directly or indirectly to or on behalf of said contractor or subcontractor from the full weekly wages earned by any person and that no deductions have been made either directly or indirectly from the full wages earned by any person, other than permissible deductions as defined in prevailing wage regulations of the State of Delaware.

2. That any payrolls otherwise under this contract required to be submitted for the above period are correct and complete; that the wage rates for laborers or mechanics contained therein are not less than the applicable wage rates contained in any wage determination incorporated into the contract; that the classifications set forth therein for each laborer or mechanic conform with the work performed.

3. That any apprentices employed in the above period are duly registered in a bona fide apprenticeship program registered with a State apprenticeship agency recognized by the Bureau of Apprenticeship and Training, United States Department of Labor, and that the worksite ratio of apprentices to mechanics does not exceed the ratio permitted by the prevailing wage regulations of the State of Delaware.

An employer who fails to submit sworn payroll information to the Department of Labor weekly shall be subject to fines of $1,000.00 to $5,000.00 for each violation.

List only those fringe benefits:
For which the employer has paid; and
Which have been used to offset the full prevailing wage rate.

(See Delaware Prevailing Wage Regulations for the explanation of how hourly value of benefits is to be computed.)

HOURLY COST OF BENEFITS
(List in same order shown on front of record)

Emp	H&W	Pens	Vac	App	Oth	Union	Cash	Total
1.	1.00	1.50	2.00	1.00	1.50	1.50	0.00	10.50
2.	1.00	1.50	2.00	1.00	1.50	1.50	0.00	10.50
3.	1.00	1.50	2.00	1.00	1.50	1.50	0.00	10.50
4.	1.00	1.50	2.00	1.00	1.50	1.50	0.00	10.50
5.								
6.								
7.								
8.								
9.								

I hereby certify that the foregoing information is true and correct to the best of my knowledge and belief. I realize that making a false statement under oath is a crime in the state of Delaware.

Cory Smith
Signature

STATE OF _____

COUNTY OF _____

SWORN TO AND SUBSCRIBED BEFORE ME, A NOTARY PUBLIC,

THIS _____ DAY OF _____; A.D. _____.

_____
Notary Public

SECTION 00 73 46

WAGE DETERMINATION SCHEDULE

The Wage Determination Schedule document is part of this project manual as included herein.

This page intentionally left blank.

STATE OF DELAWARE
DEPARTMENT OF LABOR
DIVISION OF INDUSTRIAL AFFAIRS
OFFICE OF LABOR LAW ENFORCEMENT
PHONE: (302) 318-2769

Mailing Address:
252 Chapman Road
Suite 210
Newark, DE 19702

Located at:
252 Chapman Road
Suite 210
Newark, DE 19702

PREVAILING WAGES FOR **BUILDING CONSTRUCTION** EFFECTIVE MARCH 13, 2026

CLASSIFICATION	NEW CASTLE	KENT	SUSSEX
ASBESTOS WORKERS	30.70	37.78	55.01
BOILERMAKERS	91.87	46.61	68.52
BRICKLAYERS	68.29	68.29	68.29
CARPENTERS	64.06	64.06	52.30
CEMENT FINISHERS	96.91	68.92	53.44
ELECTRICAL LINE WORKERS	61.02	52.34	39.90
ELECTRICIANS	86.87	86.87	86.87
ELEVATOR CONSTRUCTORS	121.73	86.57	109.37
GLAZIERS	88.42	88.42	76.04
INSULATORS	71.54	71.54	71.54
IRON WORKERS	79.33	79.33	79.33
LABORERS	59.65	59.65	59.65
MILLWRIGHTS	91.00	91.00	73.10
PAINTERS	61.53	61.53	61.53
PILEDRIVERS	93.37	52.83	42.72
PLASTERERS	40.06	40.06	29.69
PLUMBERS/PIPEFITTERS/STEAMFITTERS	82.05	85.29	78.26
POWER EQUIPMENT OPERATORS	85.29	85.29	85.29
ROOFERS-COMPOSITION	36.41	31.28	33.64
ROOFERS-SHINGLE/SLATE/TILE	24.68	29.36	23.08
SHEET METAL WORKERS	87.84	87.84	87.84
SOFT FLOOR LAYERS	63.69	63.69	50.43
SPRINKLER FITTERS	77.63	77.63	77.63
TERRAZZO/MARBLE/TILE FNRS	73.75	73.75	84.10
TERRAZZO/MARBLE/TILE STRS	81.93	81.93	93.27
TRUCK DRIVERS	58.41	36.83	28.66

CERTIFIED: 4/2/2026 BY: For Fran Chudzik
ADMINISTRATOR, OFFICE OF LABOR LAW ENFORCEMENT

NOTE: THESE RATES ARE PROMULGATED AND ENFORCED PURSUANT TO THE PREVAILING WAGE REGULATIONS ADOPTED BY THE DEPARTMENT OF LABOR ON APRIL 3, 1992.

CLASSIFICATIONS OF WORKERS ARE DETERMINED BY THE DEPARTMENT OF LA ASSISTANCE IN CLASSIFYING WORKERS, OR FOR A COPY OF THE REGULATI CLASSIFICATIONS, PHONE (302) 318-2769.

NON-REGISTERED APPRENTICES MUST BE PAID THE MECHANIC'S RATE.

PROJECT: MC3512000045 NORTHEAST STATE SERVICE CENTER REIMAGING, New Ca

PREVAILING WAGE DEBARMENT LIST

The following contractors have been debarred for violations of the prevailing wage law 29Del.C. §6960 or other applicable State statutes.

Therefore, no public construction contract in this State shall be bid on, awarded to, or received by contractors and individuals on this list for a period of (3) three years from the date of the judgment or as deemed by a court of competent jurisdiction.

Contractor	Address	Date of Debarment
Mullen Brothers, Inc. and Daniel Mullen, individually	3375 Garnett Road, Boothwyn, PA 19060	Indefinite/ Civil Contempt
State Contractors Corporation, and Jose Oscar Rivera, individually	13004 Hathaway Drive Silver Spring, MD 20906	Indefinite/ 19 Del.C. 2374(f)
Green Granite and Jason Green, individually	604 Heatherbrooke Court Avondale, PA 19311	Indefinite/ Civil Contempt
Pro Image Landscaping, Inc. and Owner(s) individually	23 Commerce Street Wilmington, DE 19801 and/or 2 Cameo Road Claymont, DE 19703	Indefinite/19 Del.C. §108 & 10 Del.C. 542(c)
Liberty Mechanical, LLC and Owner(s), individually	2032 Duncan Road Wilmington, DE 19801	Indefinite/ 19 Del.C. 2374(f)
Integrated Mechanical and Fire Systems Inc. and Allison Sheldon, individually	4601 Governor Printz Boulevard Wilmington, DE 19809	Indefinite/19 Del.C. §108 & 10 Del.C. 542(c)
ACH 1, INC.	873 Salem Church Road Newark, DE 19702	Indefinite/19 Del.C.6960

Updated: July 6, 2022

SECTION 00 81 13

GENERAL REQUIREMENTS

TABLE OF ARTICLES

1. GENERAL

2. OWNER

3. CONTRACTOR

4. ADMINISTRATION OF THE CONTRACT

5. SUBCONTRACTORS

6. CONSTRUCTION BY OWNER OR SEPARATE CONTRACTORS

7. CHANGES IN THE WORK

8. TIME

9. PAYMENTS AND COMPLETION

10. PROTECTION OF PERSONS AND PROPERTY

11. INSURANCE AND BONDS

12. UNCOVERING AND CORRECTION OF WORK

13. MISCELLANEOUS PROVISIONS

14. TERMINATION OR SUSPENSION OF THE CONTRACT

ARTICLE 1: GENERAL

1.1 CONTRACT DOCUMENTS

1.1.1 The intent of the Contract Documents is to include all items necessary for the proper execution and completion of the Work by the Contractor. The Contract Documents are complementary and what is required by one shall be as binding as if required by all. Performance by the Contractor shall be required to an extent consistent with the Contract Documents and reasonably inferable from them as being necessary to produce the intended results.

1.1.2 Work including material purchases shall not begin until the Contractor is in receipt of a bonafide State of Delaware Purchase Order. Any work performed or material purchases prior to the issuance of the Purchase Order is done at the Contractor's own risk and cost.

1.2 EQUALITY OF EMPLOYMENT OPPORTUNITY ON PUBLIC WORKS

1.2.1 For Public Works Projects financed in whole or in part by state appropriation the Contractor agrees that during the performance of this contract:

1. The Contractor will not discriminate against any employee or applicant for employment because of race, creed, sex, color, sexual orientation, gender identity or national origin. The Contractor will take positive steps to ensure that applicants are employed and that employees are treated during employment without regard to their race, creed, sex, color, sexual orientation, gender identity or national origin. Such action shall include, but not be limited to, the following: employment, upgrading, demotion or transfer; recruitment or recruitment advertising; layoff or termination; rates of pay or other forms of compensation; and selection for training, including apprenticeship. The Contractor agrees to post in conspicuous places available to employees and applicants for employment notices to be provided by the contracting agency setting forth this nondiscrimination clause.

2. The Contractor will, in all solicitations or advertisements for employees placed by or on behalf of the Contractor, state that all qualified applicants will receive consideration for employment without regard to race, creed, sex, color, sexual orientation, gender identity or national origin."

ARTICLE 2: OWNER

(NO ADDITIONAL GENERAL REQUIREMENTS – SEE SUPPLEMENTARY GENERAL CONDITIONS)

ARTICLE 3: CONTRACTOR

3.1 Schedule of Values: The successful Bidder shall within twenty (20) days after receiving notice to proceed with the work, furnish to the Owner a complete schedule of values on the various items comprising the work.

3.2 Subcontracts: Upon approval of Subcontractors, the Contractor shall award their Subcontracts as soon as possible after the signing of their own contract and see that all material, their own

and those of their Subcontractors, are promptly ordered so that the work will not be delayed by failure of materials to arrive on time.

3.3 Before commencing any work or construction, the General Contractor is to consult with the Owner as to matters in connection with access to the site and the allocation of Ground Areas for the various features of hauling, storage, etc.

3.4 The Contractor shall supervise and direct the Work, using the Contractor's best skill and attention. The Contractor shall be solely responsible for and have control over construction means, methods, techniques, sequences and procedures and for coordinating all portions of the Work under the Contract, unless the Contract Documents give other specific instructions.

3.5 The Contractor shall enforce strict discipline and good order among the Contractor's employees and other persons carrying out the Contract. The Contractor shall not permit employment of unfit persons or persons not skilled in tasks assigned to them.

3.6 The Contractor warrants to the Owner that materials and equipment furnished will be new and of good quality, unless otherwise permitted, and that the work will be free from defects and in conformance with the Contract Documents. Work not conforming to these requirements, including substitutions not properly approved, may be considered defective. If required by the Owner, the Contractor shall furnish evidence as to the kind and quality of materials and equipment provided.

3.7 Unless otherwise provided, the Contractor shall pay all sales, consumer, use and other similar taxes, and shall secure and pay for required permits, fees, licenses, and inspections necessary for proper execution of the Work.

3.8 The Contractor shall comply with and give notices required by laws, ordinances, rules, regulations, and lawful orders of public authorities bearing on performance of the Work. The Contractor shall promptly notify the Owner if the Drawings and Specifications are observed to be at variance therewith.

3.9 The Contractor shall be responsible to the Owner for the acts and omissions of the Contractor's employees, Subcontractors and their agents and employees, and other persons performing portions of the Work under contract with the Contractor.

3.10 The Contractor shall keep the premises and surrounding area free from accumulation of waste materials or rubbish caused by operations under the Contract. At completion of the Work the Contractor shall remove from and about the Project all waste materials, rubbish, the Contractor's tools, construction equipment, machinery and surplus materials. The Contractor shall be responsible for returning all damaged areas to their original conditions.

3.11 STATE LICENSE AND TAX REQUIREMENTS

3.11.1 Each Contractor and Subcontractor shall be licensed to do business in the State of Delaware and shall pay all fees and taxes due under State laws. In conformance with Section 2503, Chapter 25, Title 30, Delaware Code, "the Contractor shall furnish the Delaware Department of Finance within ten (10) days after entering into any contract with a

contractor or subcontractor not a resident of this State, a statement of total value of such contract or contracts together with the names and addresses of the contracting parties."

3.12 The Contractor shall comply with all requirements set forth in Section 6962, Chapter 69, Title 29 of the Delaware Code.

3.13 During the contract Work, the Contractor and each Subcontractor, shall implement an Employee Drug Testing Program in accordance with OMB Regulation 4104 - "Regulations for the Drug Testing of Contractor and Subcontractor Employees Working on "Large Public Works Projects". "Large Public Works" is based upon the current threshold required for bidding Public Works as set by the Purchasing and Contracting Advisory Council.

ARTICLE 4: ADMINISTRATION OF THE CONTRACT

4.1 CONTRACT SURETY

4.1.1 PERFORMANCE BOND AND LABOR AND MATERIAL PAYMENT BOND

4.1.2 All bonds will be required as follows unless specifically waived elsewhere in the Bidding Documents.

4.1.3 Contents of Performance Bonds – The bond shall be in the form approved by the Office of Management and Budget. The bond shall be conditioned upon the faithful compliance and performance by the successful bidder of each and every term and condition of the contract and the proposal, plans, specifications, and bid documents thereof. Each term and condition shall be met at the time and in the manner prescribed by the Contract, Bid documents and the specifications, including the payment in full to every person furnishing materiel or performing labor in the performance of the Contract, of all sums of money due the person for such labor and materiel. (The bond shall also contain the successful bidder's guarantee to indemnify and save harmless the State and the agency from all costs, damages and expenses growing out of or by reason of the Contract in accordance with the Contract.)

4.1.4 Invoking a Performance Bond – The agency may, when it considers that the interest of the State so requires, cause judgement to be confessed upon the bond.

4.1.5 Within twenty (20) days after the date of notice of award of contract, the Bidder to whom the award is made shall furnish a Performance Bond and Labor and Material Payment Bond, each equal to the full amount of the Contract price to guarantee the faithful performance of all terms, covenants and conditions of the same. The bonds are to be issued by an acceptable Bonding Company licensed to do business in the State of Delaware and shall be issued in duplicate.

4.1.6 Performance and Payment Bonds shall be maintained in full force (warranty bond) for a period of two (2) years after the date of the Certificate for Final Payment. The Performance Bond shall guarantee the satisfactory completion of the Project and that the Contractor will make good any faults or defects in his work which may develop during the period of said guarantees as a result of improper or defective workmanship, material or apparatus, whether furnished by themselves or their Sub-Contractors. The Payment Bond shall guarantee that the Contractor shall pay in full all persons, firms or corporations who furnish labor or material or both labor and material for, or on account of, the work included herein. The bonds shall be paid for by

this Contractor. The Owner shall have the right to demand that the proof parties signing the bonds are duly authorized to do so.

4.2 FAILURE TO COMPLY WITH CONTRACT

4.2.1 If any firm entering into a contract with the State, or Agency that neglects or refuses to perform or fails to comply with the terms thereof, the Agency which signed the Contract may terminate the Contract and proceed to award a new contract in accordance with this Chapter 69, Title 29 of the Delaware Code or may require the Surety on the Performance Bond to complete the Contract in accordance with the terms of the Performance Bond. Nothing herein shall preclude the Agency from pursing additional remedies as otherwise provided by law.

4.3 CONTRACT INSURANCE AND CONTRACT LIABILITY

4.3.1 In addition to the bond requirements stated in the Bid Documents, each successful Bidder shall purchase adequate insurance for the performance of the Contract and, by submission of a Bid, agrees to indemnify and save harmless and to defend all legal or equitable actions brought against the State, any Agency, officer and/or employee of the State, for and from all claims of liability which is or may be the result of the successful Bidder's actions during the performance of the Contract.

4.3.2 The purchase or nonpurchase of such insurance or the involvement of the successful Bidder in any legal or equitable defense of any action brought against the successful Bidder based upon work performed pursuant to the Contract will not waive any defense which the State, its agencies and their respective officers, employees and agents might otherwise have against such claims, specifically including the defense of sovereign immunity, where applicable, and by the terms of this section, the State and all agencies, officers and employees thereof shall not be financially responsible for the consequences of work performed, pursuant to said contract.

4.4 RIGHT TO AUDIT RECORDS

4.4.1 The Owner shall have the right to audit the books and records of a Contractor or any Subcontractor under any Contract or Subcontract to the extent that the books and records relate to the performance of the Contract or Subcontract.

4.4.2 Said books and records shall be maintained by the Contractor for a period of seven (7) years from the date of final payment under the Prime Contract and by the Subcontractor for a period of seven (7) years from the date of final payment under the Subcontract.

ARTICLE 5: SUBCONTRACTORS

5.1 SUBCONTRACTING REQUIREMENTS

5.1.1 All contracts for the construction, reconstruction, alteration or repair of any public building (not a road, street or highway) shall be subject to the following provisions:

1. A contract shall be awarded only to a Bidder whose Bid is accompanied by a statement containing, for each Subcontractor category, the name and address (city or town and State only – street number and P.O. Box addresses not required) of the subcontractor whose services the Bidder intends to use in performing the Work and providing the material for such Subcontractor category.

2. A Bid will not be accepted nor will an award of any Contract be made to any Bidder which, as the Prime Contractor, has listed itself as the Subcontractor for any Subcontractor unless:

   A. It has been established to the satisfaction of the awarding Agency that the Bidder has customarily performed the specialty work of such Subcontractor category by artisans regularly employed by the Bidder's firm;

   B. That the Bidder is duly licensed by the State to engage in such specialty work, if the State requires licenses; and

   C. That the Bidder is recognized in the industry as a bona fide Subcontractor or Contractor in such specialty work and Subcontractor category.

5.1.2 The decision of the awarding Agency as to whether a Bidder who list itself as the Subcontractor for a Subcontractor category shall be final and binding upon all Bidders, and no action of any nature shall lie against any awarding agency or its employees or officers because of its decision in this regard.

5.1.3 After such a Contract has been awarded, the successful Bidder shall not substitute another Subcontractor for any Subcontractor whose name was set forth in the statement which accompanied the Bid without the written consent of the awarding Agency.

5.1.4 No Agency shall consent to any substitution of Subcontractors unless the Agency is satisfied that the Subcontractor whose name is on the Bidders accompanying statement:

A. Is unqualified to perform the work required;

B. Has failed to execute a timely reasonable Subcontract;

C. Has defaulted in the performance on the portion of the work covered by the Subcontract; or

D. Is no longer engaged in such business.

5.1.5 Should a Bidder be awarded a contract, such successful Bidder shall provide to the agency the taxpayer identification license numbers of such subcontractors. Such numbers shall be provided on the later of the date on which such subcontractor is required to be identified or the time the contract is executed. The successful Bidder shall provide to the agency to which it is contracting, within 30 days of entering into such public works contract, copies of all Delaware Business licenses of subcontractors and/or independent contractors that will perform work for such public works contract. However, if a subcontractor or independent contractor is hired or contracted more than 20 days after the Bidder entered the public works

contract the Delaware Business license of such subcontractor or independent contractor shall be provided to the agency within 10 days of being contracted or hired.

5.1.6 The Contractor may employ additional Subcontractors on the jobsite only after submitting a copy of the Subcontractor's Employee Drug Testing Program to the Owner for approval. A Contractor or Subcontractor shall not commence work until the Owner has concluded its review and determined that the submitted Employee Drug Testing Program complies with OMB Regulation 4104.

5.2 PENALTY FOR SUBSTITUTION OF SUBCONTRACTORS

5.2.1 Should the Contractor fail to utilize any or all of the Subcontractors in the Contractor's Bid statement in the performance of the Work on the public bidding, the Contractor shall be penalized in the amount of (project specific amount*). The Agency may determine to deduct payments of the penalty from the Contractor or have the amount paid directly to the Agency. Any penalty amount assessed against the Contractor may be remitted or refunded, in whole or in part, by the Agency awarding the Contract, only if it is established to the satisfaction of the Agency that the Subcontractor in question has defaulted or is no longer engaged in such business. No claim for the remission or refund of any penalty shall be granted unless an application is filed within one year after the liability of the successful Bidder accrues. All penalty amounts assessed and not refunded or remitted to the contractor shall be reverted to the State.

*one (1) percent of contract amount not to exceed $10,000

5.3 ASBESTOS ABATEMENT

5.3.1 The selection of any Contractor to perform asbestos abatement for State-funded projects shall be approved by the Office of Management and Budget, Division of Facilities Management pursuant to Chapter 78 of Title 16.

5.4 STANDARDS OF CONSTRUCTION FOR THE PROTECTION OF THE PHYSICALLY HANDICAPPED

5.4.1 All Contracts shall conform with the standard established by the Delaware Architectural Accessibility Board unless otherwise exempted by the Board.

5.5 CONTRACT PERFORMANCE

5.5.1 Any firm entering into a Public Works Contract that neglects or refuses to perform or fails to comply with its terms, the Agency may terminate the Contract and proceed to award a new Contract or may require the Surety on the Performance Bond to complete the Contract in accordance with the terms of the Performance Bond.

ARTICLE 6: CONSTRUCTION BY OWNER OR SEPARATE CONTRACTORS

6.1 The Owner reserves the right to simultaneously perform other construction or operations related to the Project with the Owner's own forces, and to award separate contracts in connection with other portions of the Project or other Projects at the same site.

6.2 The Contractor shall afford the Owner and other Contractors reasonable opportunity for access and storage of materials and equipment, and for the performance of their activities, and shall connect and coordinate their activities with other forces as required by the Contract Documents.

ARTICLE 7: CHANGES IN THE WORK

7.1 The Owner, without invalidating the Contract, may order changes in the Work consisting of Additions, Deletions, Modifications or Substitutions, with the Contract Sum and Contract completion date being adjusted accordingly. Such changes in the Work shall be authorized by written Change Order signed by the Professional, as the duly authorized agent, the Contractor and the Owner.

7.2 The Contract Sum and Contract Completion Date shall be adjusted only by a fully executed Change Order.

7.3 The additional cost, or credit to the Owner resulting from a change in the Work shall be by mutual agreement of the Owner, Contractor and the Architect. In all cases, this cost or credit shall be based on the 'DPE' wages required and the "invoice price" of the materials/equipment needed.

7.3.1 "DPE" shall be defined to mean "direct personnel expense". Direct payroll expense includes prevailing wage rates plus a maximum multiplier of 1.35 times DPE. For example, if the prevailing wage rate is $50/hour, the DPE would be $67.50/hour (50 x 1.35).

7.3.2 "Invoice price" of materials/equipment shall be defined to mean the actual cost of materials and/or equipment that is paid by the Contractor, (or subcontractor), to a material distributor, direct factory vendor, store, material provider, or equipment leasing entity. Rates for equipment that is leased and/or owned by the Contractor or subcontractor(s) shall not exceed those listed in the latest version of the "Means Building Construction Cost Data" publication.

7.3.3 In addition to the above:

7.3.3.1 The General Contractor is allowed a fifteen percent (15%) markup for overhead and profit for additional work performed by the General Contractor's own forces.

7.3.3.2 For additional subcontractor work, the Subcontractor is allowed a fifteen (15) percent overhead and profit on change order work above and beyond the direct costs stated previously. To this amount, the General Contractor will be allowed a mark-up not exceeding seven- and one-half percent (7.5%) on the subcontractor's work.

7.3.3.3 Where the Third Tier Contractor is going to be completing the additional work, the Third-Tier contractor will be allowed a markup of fifteen percent (15%) overhead and profit on changes order work above and beyond the direct costs stated previously. To this amount, the Subcontractor will be allowed a markup not to exceed seven and one-half percent (7.5%) on the Third-Tier Contractor's work and the General Contractor will be allowed a

markup not to exceed seven and one-half percent (7.5%) of the amount of the Subcontractor's markup.

7.3.3.4 No additional costs shall be allowed for changes related to the Contractor's onsite superintendent/staff, or project manager, unless a change in the work changes the project duration and is identified by the CPM schedule. There will be no other costs associated with the change order.

7.3.3.5 These markups shall include all costs including, but not limited to: overhead, profit, bonds, insurance, supervision, etc.

ARTICLE 8: TIME

8.1 Time limits, if any, are as stated in the Project Manual. By executing the Agreement, the Contractor confirms that the stipulated limits are reasonable, and that the Work will be completed within the anticipated time frame.

8.2 If progress of the Work is delayed at any time by changes ordered by the Owner, by labor disputes, fire, unusual delay in deliveries, abnormal adverse weather conditions, unavoidable casualties or other causes beyond the Contractor's control, the Contract Time shall be extended for such reasonable time as the Owner may determine.

8.3 Any extension of time beyond the date fixed for completion of the construction and acceptance of any part of the Work called for by the Contract, or the occupancy of the building by the Owner, in whole or in part, previous to the completion shall not be deemed a waiver by the Owner of his right to annul or terminate the Contract for abandonment or delay in the matter provided for, nor relieve the Contractor of full responsibility

8.4 SUSPENSION AND DEBARMENT

8.4.1 Per Section 6962(d)(14), Title 29, Delaware Code, "Any Contractor who fails to perform a public works contract or complete a public works project within the time schedule established by the Agency in the Invitation To Bid, may be subject to Suspension or Debarment for one or more of the following reasons: a) failure to supply the adequate labor supply ratio for the project; b) inadequate financial resources; or, c) poor performance on the Project."

8.4.2 "Upon such failure for any of the above stated reasons, the Agency that contracted for the public works project may petition the Director of the Office of Management and Budget for Suspension or Debarment of the Contractor. The Agency shall send a copy of the petition to the Contractor within three (3) working days of filing with the Director. If the Director concludes that the petition has merit, the Director shall schedule and hold a hearing to determine whether to suspend the Contractor, debar the Contractor or deny the petition. The Agency shall have the burden of proving, by a preponderance of the evidence, that the Contractor failed to perform or complete the public works project within the time schedule established by the Agency and failed to do so for one or more of the following reasons: a) failure to supply the adequate labor supply ratio for the project; b) inadequate financial resources; or, c) poor performance on the project. Upon a finding in favor of the

Agency, the Director may suspend a Contractor from Bidding on any project funded, in whole or in part, with public funds for up to 1 year for a first offense, up to 3 years for a second offense and permanently debar the Contractor for a third offense. The Director shall issue a written decision and shall send a copy to the Contractor and the Agency. Such decision may be appealed to the Superior Court within thirty (30) days for a review on the record."

8.5 RETAINAGE

8.5.1 Per Section 6962(d)(5) a.3, Title 29, Delaware Code: The Agency may at the beginning of each public works project establish a time schedule for the completion of the project. If the project is delayed beyond the completion date due to the Contractor's failure to meet their responsibilities, the Agency may forfeit, at its discretion, all or part of the Contractor's retainage.

8.5.2 This forfeiture of retainage also applies to the timely completion of the punchlist. A punchlist will only be prepared upon the mutual agreement of the Owner, Architect and Contractor. Once the punchlist is prepared, all three parties will by mutual agreement, establish a schedule for its completion. Should completion of the punchlist be delayed beyond the established date due to the Contractor's failure to meet their responsibilities, the Agency may hold permanently, at its discretion, all or part of the Contractor's retainage.

ARTICLE 9: PAYMENTS AND COMPLETION

9.1 APPLICATION FOR PAYMENT

9.1.1 Applications for payment shall be made upon AIA Document G702. There will be a five percent (5%) retainage on all Contractor's monthly invoices until completion of the project. This retainage may become payable upon receipt of all required closeout documentation, provided all other requirements of the Contract Documents have been met.

9.1.2 A date will be fixed for the taking of the monthly account of work done. Upon receipt of Contractor's itemized application for payment, such application will be audited, modified, if found necessary, and approved for the amount. Statement shall be submitted to the Owner.

9.1.3 Section 6516, Title 29 of the Delaware Code annualized interest is not to exceed 12% per annum beginning thirty (30) days after the "presentment" (as opposed to the date) of the invoice.

9.2 PARTIAL PAYMENTS

9.2.1 Any public works Contract executed by any Agency may provide for partial payments at the option of the Owner with respect to materials placed along or upon the sites or stored at secured locations, which are suitable for use in the performance of the contract.

9.2.2 When approved by the agency, partial payment may include the values of tested and acceptable materials of a nonperishable or noncontaminative nature which have been produced or furnished for incorporation as a permanent part of the work yet to be completed, provided acceptable provisions have been made for storage.

9.2.2.1 Any allowance made for materials on hand will not exceed the delivered cost of the materials as verified by invoices furnished by the Contractor, nor will it exceed the contract bid price for the material complete in place.

9.2.3 If requested by the Agency, receipted bills from all Contractors, Subcontractors, and material, men, etc., for the previous payment must accompany each application for payment. Following such a request, no payment will be made until these receipted bills have been received by the Owner.

9.3 SUBSTANTIAL COMPLETION

9.3.1 When the building has been made suitable for occupancy, but still requires small items of miscellaneous work, the Owner will determine the date when the project has been substantially completed.

9.3.2 If, after the Work has been substantially completed, full completion thereof is materially delayed through no fault of the Contractor, and without terminating the Contract, the Owner may make payment of the balance due for the portion of the Work fully completed and accepted. Such payment shall be made under the terms and conditions governing final payment that it shall not constitute a waiver of claims.

9.3.3 On projects where commissioning is included, the commissioning work as defined in the specifications must be complete prior to the issuance of substantial completion.

9.4 FINAL PAYMENT

9.4.1 Final payment, including the five percent (5%) retainage if determined appropriate, shall be made within thirty (30) days after the Work is fully completed and the Contract fully performed and provided that the Contractor has submitted the following closeout documentation (in addition to any other documentation required elsewhere in the Contract Documents):

9.4.1.1 Evidence satisfactory to the Owner that all payrolls, material bills, and other indebtedness connected with the work have been paid,

9.4.1.2 An acceptable RELEASE OF LIENS,

9.4.1.3 Copies of all applicable warranties,

9.4.1.4 As-built drawings,

9.4.1.5 Operations and Maintenance Manuals,

9.4.1.6 Instruction Manuals,

9.4.1.7 Consent of Surety to final payment.

9.4.1.8 The Owner reserves the right to retain payments, or parts thereof, for its protection until the foregoing conditions have been complied with, defective work corrected and all unsatisfactory conditions remedied.

ARTICLE 10: PROTECTION OF PERSONS AND PROPERTY

10.1 The Contractor shall be responsible for initiating, maintaining, and supervising all safety precautions and programs in connection with the performance of the Contract. The Contractor shall take all reasonable precautions to prevent damage, injury or loss to: workers, persons nearby who may be affected, the Work, materials and equipment to be incorporated, and existing property at the site or adjacent thereto. The Contractor shall give notices and comply with applicable laws ordinances, rules regulations, and lawful orders of public authorities bearing on the safety of persons and property and their protection from injury, damage, or loss. The Contractor shall promptly remedy damage and loss to property at the site caused in whole or in part by the Contractor, a Subcontractor, or anyone directly or indirectly employed by any of them, or by anyone for whose acts they may be liable.

10.2 The Contractor shall notify the Owner in the event any existing hazardous material such as lead, PCBs, asbestos, etc. is encountered on the project. The Owner will arrange with a qualified specialist for the identification, testing, removal, handling and protection against exposure or environmental pollution, to comply with applicable regulation laws and ordinances. The Contractor and Architect will not be required to participate in or to perform this operation. Upon completion of this work, the Owner will notify the Contractor and Architect in writing the area has been cleared and approved by the authorities in order for the work to proceed. The Contractor shall attach documentation from the authorities of said approval.

10.3 As required in the Hazardous Chemical Information Act of June 1984, all vendors supplying any materials that may be defined as hazardous, must provide Material Safety Data Sheets for those products. Any chemical product should be considered hazardous if it has a warning caution on the label relating to a potential physical or health hazard, if it is known to be present in the work place, and if employees may be exposed under normal conditions or in any foreseeable emergency situation. Material Safety Data Sheets <u>must</u> be provided <u>directly to the Owner</u> along with the shipping slips that include those products.

10.4 The Contractor shall certify to the Owner that materials incorporated into the Work are free of all asbestos. This certification may be in the form of Material Safety Data Sheet (MSDS) provided by the product manufacturer for the materials used in construction, as specified or as provided by the Contractor.

ARTICLE 11: INSURANCE AND BONDS

11.1 The Contractor shall carry all insurance required by law, such as Unemployment Insurance, etc. The Contractor shall carry such insurance coverage as they desire on their own property such as a field office, storage sheds or other structures erected upon the project site that belong to them and for their own use. The Subcontractors involved with this project shall carry whatever insurance protection they consider necessary to cover the loss of any of their personal property, etc.

11.2 Upon being awarded the Contract, the Contractor shall obtain a minimum of two (2) copies of all required insurance certificates called for herein, and submit one (1) copy of each certificate, to the Owner, within 20 days of contract award.

11.3 Bodily Injury Liability and Property Damage Liability Insurance shall, in addition to the coverage included herein, include coverage for injury to or destruction of any property arising out of the collapse of or structural injury to any building or structure due to demolition work and evidence of these coverages shall be filed with and approved by the Owner.

11.4 The Contractor's Property Damage Liability Insurance shall, in addition to the coverage noted herein, include coverage on all real and personal property in their care, custody and control damaged in any way by the Contractor or their Subcontractors during the entire construction period on this project.

11.5 Builders Risk (including Standard Extended Coverage Insurance) on the existing building during the entire construction period, may be provided by the Contractor under this contract. The Owner shall insure the existing building and all of its contents and all this new alteration work under this contract during entire construction period for the full insurable value of the entire work at the site. Note, however, that the Contractor and their Subcontractors shall be responsible for insuring building materials (installed and stored) and their tools and equipment whenever in use on the project, against fire damage, theft, vandalism, etc.

11.6 Certificates of the insurance company or companies stating the amount and type of coverage, terms of policies, etc., shall be furnished to the Owner, within 20 days of contract award.

11.7 The Contractor shall, at their own expense, (in addition to the above) carry the following forms of insurance:

11.7.1 <u>Contractor's Contractual Liability Insurance</u>

Minimum coverage to be:

Bodily Injury		
	$1,000,000	for each occurrence
	$3,000,000	aggregate
Property Damage	$1,000,000	for each occurrence
	$3,000,000	aggregate

11.7.2 <u>Contractor's Protective Liability Insurance</u>

Minimum coverage to be:

Bodily Injury		
	$1,000,000	for each occurrence
	$3,000,000	aggregate

Property Damage	$1,000,000	for each occurrence
	$3,000,000	aggregate

11.7.3 Automobile Liability Insurance

Minimum coverage to be:

Bodily Injury	$1,000,000	for each person
	$1,000,000	for each occurrence
Property Damage	$500,000	per accident

11.7.4 Prime Contractor's and Subcontractors' policies shall include contingent and contractual liability coverage in the same minimum amounts as 11.7.1 above.

11.7.5 Workmen's Compensation (including Employer's Liability):

11.7.5.1 Minimum Limit on employer's liability to be as required by law.

11.7.5.2 Minimum Limit for all employees working at one site.

11.7.6 Certificates of Insurance must be filed with the Owner guaranteeing fifteen (15) days prior notice of cancellation, non-renewal, or any change in coverages and limits of liability shown as included on certificates.

11.7.7 Social Security Liability

11.7.7.1 With respect to all persons at any time employed by or on the payroll of the Contractor or performing any work for or on their behalf, or in connection with or arising out of the Contractor's business, the Contractor shall accept full and exclusive liability for the payment of any and all contributions or taxes or unemployment insurance, or old age retirement benefits, pensions or annuities now or hereafter imposed by the Government of the United States and the State or political subdivision thereof, whether the same be measured by wages, salaries or other remuneration paid to such persons or otherwise.

11.7.7.2 Upon request, the Contractor shall furnish Owner such information on payrolls or employment records as may be necessary to enable it to fully comply with the law imposing the aforesaid contributions or taxes.

11.7.7.3 If the Owner is required by law to and does pay any and/or all of the aforesaid contributions or taxes, the Contractor shall forthwith reimburse the Owner for the entire amount so paid by the Owner.

ARTICLE 12: UNCOVERING AND CORRECTION OF WORK

12.1 The Contractor shall promptly correct Work rejected by the Owner or failing to conform to the requirements of the Contract Documents, whether observed before or after Substantial Completion and whether or not fabricated, installed or completed, and shall correct any Work found to be not in accordance with the requirements of the Contract Documents within a period of two years from the date of Substantial Completion, or by terms of an applicable

special warranty required by the Contract Documents. The provisions of this Article apply to work done by Subcontractors as well as to Work done by direct employees of the Contractor.

12.2 At any time during the progress of the work, or in any case where the nature of the defects shall be such that it is not expedient to have them corrected, the Owner, at their option, shall have the right to deduct such sum, or sums, of money from the amount of the contract as they consider justified to adjust the difference in value between the defective work and that required under contract including any damage to the structure.

ARTICLE 13: MISCELLANEOUS PROVISIONS

13.1 CUTTING AND PATCHING

13.1.1 The Contractor shall be responsible for all cutting and patching. The Contractor shall coordinate the work of the various trades involved.

13.2 DIMENSIONS

13.2.1 All dimensions shown shall be verified by the Contractor by actual measurements at the project site. Any discrepancies between the drawings and specifications and the existing conditions shall be referred to the Owner for adjustment before any work affected thereby has been performed.

13.3 LABORATORY TESTS

13.3.1 Any specified laboratory tests of material and finished articles to be incorporated in the work shall be made by bureaus, laboratories or agencies approved by the Owner and reports of such tests shall be submitted to the Owner. The cost of the testing shall be paid for by the Contractor.

13.3.2 The Contractor shall furnish all sample materials required for these tests and shall deliver same without charge to the testing laboratory or other designated agency when and where directed by the Owner.

13.4 ARCHAEOLOGICAL EVIDENCE

13.4.1 Whenever, in the course of construction, any archaeological evidence is encountered on the surface or below the surface of the ground, the Contractor shall notify the authorities of the State Historic Preservation Office and suspend work in the immediate area for a reasonable time to permit those authorities, or persons designated by them, to examine the area and ensure the proper removal of the archaeological evidence for suitable preservation by the Division of Historical and Cultural Affairs.

13.5 GLASS REPLACEMENT AND CLEANING

13.5.1 The General Contractor shall replace without expense to the Owner all glass broken during the construction of the project. If job conditions warrant, at completion of the job the General Contractor shall have all glass cleaned and polished.

13.6 WARRANTY

13.6.1 For a period of two (2) years from the date of substantial completion, as evidenced by the date of final acceptance of the work, the contractor warrants that work performed under this contract conforms to the contract requirements and is free of any defect of equipment, material or workmanship performed by the contractor or any of his subcontractors or suppliers. However, manufacturer's warranties and guarantees, if for a period longer than two (2) years, shall take precedence over the above warranties. The contractor shall remedy, at his own expense, any such failure to conform or any such defect. The protection of this warranty shall be included in the Contractor's Performance Bond.

ARTICLE 14: TERMINATION OR SUSPENSION OF THE CONTRACT

14.1 If the Contractor defaults or persistently fails or neglects to carry out the Work in accordance with the Contract Documents or fails to perform a provision of the Contract, the Owner, after seven days written notice to the Contractor, may make good such deficiencies and may deduct the cost thereof from the payment then or thereafter due the Contractor. Alternatively, at the Owner's option, and the Owner may terminate the Contract and take possession of the site and of all materials, equipment, tools, and machinery thereon owned by the Contractor and may finish the Work by whatever method the Owner may deem expedient. If the costs of finishing the Work exceed any unpaid compensation due the Contractor, the Contractor shall pay the difference to the Owner.

14.2 "If the continuation of this Agreement is contingent upon the appropriation of adequate state, or federal funds, this Agreement may be terminated on the date beginning on the first fiscal year for which funds are not appropriated or at the exhaustion of the appropriation. The Owner may terminate this Agreement by providing written notice to the parties of such non-appropriation. All payment obligations of the Owner will cease upon the date of termination. Notwithstanding the foregoing, the Owner agrees that it will use its best efforts to obtain approval of necessary funds to continue the Agreement by taking appropriate action to request adequate funds to continue the Agreement."

END OF SECTION

SECTION 00 81 14

EMPLOYEE DRUG TESTING FORMS

The Employee Drug Testing Report Form and Employee Drug Testing - Report of Positive Results are as included herein.

The Office of Management and Budget (OMB) has developed the 4014 regulation as part of the Delaware Code that requires Contractors and Subcontractors to implement a program of mandatory drug testing for Employees who work on Large Public Works Contracts funded all or in part without public funds pursuant to 29 Del.C.6908(a)(6). The regulations establish the mechanism, standards and requirements of a Mandatory Drug Testing Program that will be incorporated for reference into the Contract awarded pursuant to 29 Del.C.6962. Sample copies of Testing Report Forms maintained and/or submitted pursuant to the requirements of 4104 regulations for this Project are included herewith.

This page intentionally left blank.

EMPLOYEE DRUG TESTING REPORT FORM
Period Ending:_____

4104 Regulations for the Drug Testing of Contractor and Subcontractor Employees Working on Large Public Works Projects requires that Contractors and Subcontractors who work on Large Public Works Contracts funded all or in part with public funds maintain testing data that includes but is not limited to the data elements below.

Project Number: _____

Project Name: _____

Contractor/Subcontractor Name: _____

Contractor/Subcontractor Address: _____
_____
_____

Number of employees who worked on the jobsite during the report period:_____

Number of employees subject to random testing during the report period:_____

Number of Negative Results _____ Number of Positive Results _____

Action taken on employee(s) in response to a failed or positive random test:
_____
_____
_____

Date: _____

This form is not required to be submitted to the Owner. Included as a reference to show information required to be maintained by the Contractor. The Owner shall have the right to periodically audit all Contractor and Subcontractor test results at the Contractor's or Subcontractor's offices (or by other means to make the data available for inspection by the Owner).

This page intentionally left blank.

EMPLOYEE DRUG TESTING
REPORT OF POSITIVE RESULTS

4104 Regulations for the Drug Testing of Contractor and Subcontractor Employees Working on Large Public Works Projects requires that Contractors and Subcontractors who work on Large Public Works Contracts funded all or in part with public funds to notify the Owner in writing of a positive random drug test.

Project Number: _____

Project Name: _____

Contractor/Subcontractor Name: _____

Contractor/Subcontractor Address: _____
_____
_____

Name of employee with positive test result:_____

Last 4 digits of employee SSN:_____

Date test results received:_____

Action taken on employee in response to a positive test result:
_____
_____
_____

Authorized Representative of Contractor/Subcontractor: _____
(typed or printed)

Authorized Representative of Contractor/Subcontractor: _____
(signature)

Date: _____

This form shall be sent by mail to the Owner within 24 hours of receipt of test results.

Enclose this test results form in a sealed envelope with the notation "Drug Testing Form – DO NOT OPEN" on the face thereof and place in a separate mailing envelope.

This page intentionally left blank.

SECTION 00 81 15

AFFIDAVIT OF CRAFT TRAINING COMPLIANCE

The Affidavit of Craft Training Compliance document is part of this project manual as included herein. The Craft Training Compliance Affidavit, as well as all information pertaining to craft training for subcontractors must be submitted prior to contract execution.

This page intentionally left blank.

AFFIDAVIT OF CRAFT TRAINING COMPLIANCE

We, the contractor, hereby certify that we and all applicable subcontractors will abide by the contractor and subcontractor craft training requirements outlined below for the duration of the contract. Craft training must be provided by a contractor and/or subcontractor for each craft on a project for which there are Delaware Department of Labor approved and registered training programs or, if the contractor and/or subcontractor meets the requirements under Title 29, Chapter 69, Section 6960A.(b)(1)c.1.-3., payment may be made in accordance with Title 29, Chapter 69, Section 6960A.(b)(1)d. A list of crafts for which there are approved and registered training programs is maintained by the Delaware Department of Labor and can be found at: https://laborfiles.delaware.gov/main/det/apprenticeship/DE%20Craft%20Training%20Occupation%20List%20Effective%20March%201%202022.pdf. If you have questions regarding craft training programs, please submit all questions in writing to the Delaware Department of Labor at: apprenticeship@delaware.gov. ***This Affidavit of Craft Training Compliance must be submitted prior to contract execution***.

In accordance with Title 29, Chapter 69, Section 6960A.(a)(1), a contract relating to a public works project under § 6962 of Title 29 must include a craft training program for each craft in the project if at the time the contractor executes a public works contract, all of the following apply:

a. A project meets the prevailing wage requirement under Section 6960 of Title 29.
b. The contractor employs 10 or more total employees.
c. The project is not a federal highway project, except for the project under Section 6962(c)(11) of Title 29.
d. There is an apprenticeship program for a craft in the project on the list of crafts under Section 204(b)(2) of Title 19.

Pursuant to Title 29, Chapter 69, Section 6960A.(a)(2), ***a contractor must commit that all subcontractors provide craft training*** if paragraph (a)(1) of this section applies to the subcontractor. Failure to provide required craft training or payment on the project may subject the successful contractor and/or subcontractor(s) to penalties as outlined in Title 29, Chapter 69, Section 6960A.(d)(1)-(3).

Craft(s): _____

Contractor Name: _____

Contractor Address: _____

_____

_____

Contractor Program Registration Number(s) _____
On this line also indicate whether DE, Other State (identify) or US Registration Number

Or

❑ **A payment has been made in the amount established under Section 204(b)(2)b.2. of Title 19, for the craft into the Delaware Department of Labor's Apprenticeship and Training Fund.**

Or

❑ **Craft Training requirements are not applicable because:**

_____

Authorized Representative (typed or printed): _____

Authorized Representative (signature): _____

Title: _____

State of Delaware)
) **ss:**
County of _____)

Before me, a notary public, in and for said county and state, personally appeared, _____, who acknowledged to me that she/he did execute the foregoing instrument on behalf of _____.

IN TESTIMONY WHEREOF, I have subscribed my name and affixed my official seal this ____ day of _____ 20___.

_____
Notary Public
Commission Expires _____

THIS PAGE MUST BE SIGNED AND NOTARIZED TO BE CONSIDERED.

SECTION 01 11 00

SUMMARY OF WORK

PART 1 - GENERAL

1.1 WORK COVERED BY CONTRACT DOCUMENTS

Work includes scope of work includes the approximately 3,000 square foot interior renovation, reconstruction of a vestibule, addition of an exterior stair, and all associate mechanical, electrical, and fire protection work.

1.2 RELATED DOCUMENTS

Drawings, specifications and general provisions of the Contract, including General and Supplementary Conditions and other Division 01 specifications sections apply to this section.

1.3 CONTRACT

The specified work is to be accomplished under a single Base Bid, including selected Alternates.

1.4 WORK SCHEDULE

A construction schedule based upon the work shall be submitted by the contractor at pre-construction. This is in addition to the number of calendar days noted on the bid form.

1.5 CONTRACT DURATION

Project is estimated to have a six month construction time.

1.6 USE OF PREMISES

Use of premises by Contractor to be limited to specified work areas and approved storage and staging areas.

1.7 CODES

All work shall be performed in accordance with the applicable codes and rules and regulations of the regulatory agencies which have jurisdiction over this project and its location.

1.8 PROGRESS MEETINGS

In addition to a pre-construction meeting, progress meetings will be held bi-weekly during the course of the project at dates and times to be announced.

1.9 DELIVERED MATERIALS

Under no circumstances will the Northeast SSC staff sign as received any materials delivered to the job.

1.10 PERMITS AND LICENSES

All required permits will be paid for and obtained by the Contractor. In addition, all Contractors must be licensed by the State of Delaware.

1.11 MANDATORY EMPLOYEE DRUG TESTING

The Contractor shall provide mandatory employee drug testing in accordance with 29 Del. C §6908(a)(6).

PART 2 - PRODUCTS

Not Used

PART 3 - EXECUTION

Not Used

END OF SECTION

SECTION 01 21 00

ALLOWANCES

PART 1 - GENERAL

1.1 RELATED DOCUMENTS

A. Drawings and general provisions of the Contract, including General and Supplementary Conditions and other Division - 01 Specification Sections, apply to this Section.

1.2 SUMMARY

A. This Section specifies administrative and procedural requirements for Allowances.

B. Types of Allowances may include the following (Refer to "Schedule of Allowances" include at the end of this Section):

1. Lump-sum Allowances.

C. Selection and Purchase:

1. Purchase products, systems and labor specifically selected (in writing) by the Owner and/or as indicated in the Schedule of Allowances.

D. Submittals:

1. Submit invoices or delivery slips to show the actual quantities of materials delivered to the site and labor executed for use in fulfillment of each Allowance.

E. Coordinate Allowance work with related work to ensure that each selection is completely integrated and interfaced with related work.

F. Lump-Sum Allowances:

1. These Allowances shall cover the cost to the Contractor, less any applicable trade discount, of the materials, labor and equipment required by the Allowance delivered at the site, and all applicable taxes.

2. The Contractor's costs for unloading and handling on the site, labor, installation costs, overhead, profit and other expenses contemplated for the original Allowance shall be included separately in the Contract Sum and not in the Allowance.

3. Whenever the cost is more than or less than the Allowance, the Contract Sum shall be adjusted accordingly by Change Order.

a. Change Order Mark-up: The amount of each change order resulting from final selection of products and systems covered by an Allowance shall be the difference between the Contractor's purchase price amount and the Allowance, and shall not

include Contractor's mark-up (or subcontractor's mark-up) except to the extent clearly demonstrated (by Contractor) that either scope of installation or nature of work required was changed from that which could have been foreseen from description of Allowance and other information in contract documents. No mark-up is permitted for selection of higher or lower priced materials or systems, of same scope and nature as originally indicated.

b. Change Order Data: Where applicable, include in each change order proposal both the quantities of products being purchased and unit costs, along with total amount of purchase to be made. Where requested, furnish survey-of-requirements data to substantiate quantities. Indicate applicable taxes, delivery charges, and amounts of applicable trade discounts.

G. Unused Materials:

1. Return unused materials to the manufacturer or supplier for credit to the Owner, after installation has been completed and accepted.

a. When requested by the Owner, prepare unused material for storage by Owner where it is not economically practical to return the material for credit. When directed by the Owner, deliver unused material to the Owner's storage space. Otherwise, disposal of unused material is the Contractor's responsibility.

PART 2 - PRODUCTS (Not Applicable)

PART 3 – EXECUTION

3.1 EXAMINATION

A. Examine products covered by an Allowance promptly upon delivery for damage or defects.

3.2 PREPARATION

A. Coordinate materials and their installation for each Allowance with related materials and installations to ensure that each Allowance item is completely integrated and interfaced with related work. The general contractor shall be responsible for any necessary work that is not covered in each vendor’s proposal indicated in the Schedule of Allowances.

3.3 SCHEDULE OF ALLOWANCES

A. Allowance No. 1: Provide allowance of $30,000.00 for unforeseen conditions (include in base bid).

END OF SECTION

SECTION 01 23 00

ALTERNATES

PART 1 - GENERAL

1.1 RELATED DOCUMENTS

A. Drawings, specifications and general provisions of Contract, including General and Supplementary Conditions and other Division-1 Specification Sections, apply to this Section.

1.2 SUMMARY

A. This Section specifies administrative and procedural requirements for Alternates.

B. Definition: An Alternate is an amount proposed by Bidders and stated on the Bid Form for certain construction activities defined in the bidding requirements that may be added to or deducted from Base Bid amount if the Owner decides to accept the corresponding change in either the amount of construction to be completed, or in the products, materials, equipment, systems or installation methods described in Contract Documents.

C. Coordination: Coordinate related Work and modify or adjust adjacent Work as necessary to ensure that Work affected by each accepted Alternate is complete and fully integrated into the project.

D. Notification: Immediately following the award of the Contract, prepare and distribute to each party involved, notification of the status of each Alternate. Indicate whether Alternates have been accepted, rejected or deferred for consideration at a later date. Include a complete description of negotiated modifications to Alternates.

E. Schedule: A "Schedule of Alternates" is included at the end of this Section. Specification Sections referenced in the Schedule contain requirements for materials and methods necessary to achieve the Work described under each Alternate.

1. Include as part of each Alternate, miscellaneous devices, accessory objects and similar items incidental to or required for a complete installation whether or not mentioned as part of the Alternate.

PART 2 - PRODUCTS (Not Applicable).

PART 3 - EXECUTION (Not Applicable).

Schedule of Alternates:

A. Alternate No. 1: Provide a cost to work (4) four, (10) hour days starting at 5:30 p.m.

END OF SECTION

This page intentionally left blank.

SECTION 01 31 19

PROJECT MEETINGS

PART 1 GENERAL

1.1 DESCRIPTION

A. Work Included:

1. To enable orderly review during progress of the work;

2. To provide for systematic discussion of problems;

3. Project meetings shall be held, in addition to the pre-construction meeting, bi-weekly during the construction period.

B. Related Work Described Elsewhere:

1. The Contractor's relations with his Vendors and material suppliers, and discussions relative thereto, are the Contractor's responsibility and are not part of project meetings content.

1.2 QUALITY ASSURANCE

A. Persons designated by the Contractor to attend and participate in the project meetings shall have all required authority to commit Contractor to solutions agreed upon in the project meetings.

1.3 SUBMITTALS

A. Agenda Items:

1. To the maximum extent practicable, advise the Architect at least 24 hours in advance of project meetings regarding all items to be added to the agenda.

B. Minutes:

1. The Architect will keep minutes of project meetings and will distribute copies to all parties present at meeting or listed on a permanent list of concerned parties.

2. The Contractor shall reproduce and distribute additional copies to other parties as needed to expedite the work.

3. The Contractor shall keep all meeting minutes and provide them on the CD with their closeout documents.

PART 2 - PRODUCTS

2.1 MEETING SCHEDULE

A. Except as noted below for preconstruction meeting, progress meetings will be scheduled by the Architect.

B. The Contractor shall schedule the presence of active and critical suppliers, and management personnel at these meetings.

C. Representatives of the Contractor's suppliers shall be persons familiar with the details of the work. They shall be persons authorized to make commitments on matters of work progress, delivery dates, size of labor force, cost and other matters as necessary to expedite the work.

2.2 MEETING LOCATION

A. To the maximum extent practicable, meetings will be held at the job site.

2.3 PRECONSTRUCTION MEETING

A. This meeting will be scheduled by the Contractor within ten (10) days after the Owner has issued the notice-to-proceed order.

B. Provide attendance by authorized representatives of the Contractor.

C. Minimum agenda shall consist of distribution and discussion of the following data:

1. Organizational arrangement of Contractor's forces and personnel, and those of materials suppliers and the Architect.

2. Channels and procedures for communications.

3. Construction schedule, including sequence of critical work.

4. Contract Documents, including distribution of required copies of original Documents and revisions.

5. Processing of Shop Drawings and other data submitted to the Architect for review.

6. Processing of field decisions and Change Orders.

7. Rules and regulations governing performance of the work.

8. Procedures for security, quality control, housekeeping, and other related matters.

2.4 PROJECT MEETINGS

A. To the maximum extent practicable, assign the same persons or persons to represent the Contractor at the project meetings throughout progress of the work. Materials suppliers, and others may be invited to attend those project meetings in which their aspects of work are involved.

B. Minimum Agenda Shall Consist of the Following:

1. Review, revise as necessary, and approve minutes of previous meetings.

2. Review progress of the work since last meeting, including status of submittals for approval.

3. Identify problems which impede planned progress.

4. Develop corrective measures and procedures to regain planned schedule.

5. Complete other current business.

C. Project meetings shall be held in addition to the preconstruction meeting, bi-weekly during construction. Two project meetings, as a minimum, shall be allotted for punchlist resolution.

PART 3 - EXECUTION

Not Used

END OF SECTION

This page intentionally left blank.

SECTION 01 33 23

SHOP DRAWINGS, PRODUCT DATA AND SAMPLES

1.1 GENERAL

A. Description

1. Work Included:

   a. Submit to the Architect all shop drawings, product data and samples required by the specification sections.

2. Related Work Described Elsewhere:

   a. Closeout Procedures in Section 01 77 00 “Closeout Procedures”.

3. Schedules:

   a. Prepare and submit, with Construction Schedule, a separate schedule listing dates for submission and dates for review of shop drawings, product data and samples that will be needed for each product.

4. Definitions:

   a. The definitions of the terms "Shop Drawings", "Product Data", and "Samples" shall be as defined by the General Conditions of the Contract for Construction.

5. The Phrase "By Others":

   a. Where the phrase "By Others" (or a similar expression) appears on a submittal, and refers to any of the Contract Work, it shall be construed to mean "By the Contractor". The Architect's approval of any Submittal containing such phrase shall not be considered permission to delete any work from the Contract.

6. Time for Making Submissions:

   a. The Contractor will be held responsible for any delay in the progress of the Work which may be due to his failure to make submittals as required herein.

7. Submittal Information:

   a. Project title and number.
   b. Consecutive number revised.
   c. Data drawn and data revised.
   d. Contractors certification that submittals have been checked by him for compliance with Contract Requirements.
   e. Space for approval stamps.
   f. Working dimensions and erection dimensions.

g. Arrangements.
h. Sectional views.
I. Details and methods of fabrications, assembly and erection.
j. Details of connections with contiguous work.
k. Fastenings.
l. Equipment, accessories and trimmings.
m. Kinds of materials.
n. Protective coatings and factory finishes.
o. Complete schedules.
p. Other pertinent data.

1.2 SHOP DRAWINGS

A. Composite Shop Drawings and Field Installation Layouts:

1. The Contractor shall prepare composite shop drawings and field installation layouts, when required, to solve tight conditions. Such drawings shall consist of dimensioned plans and elevations and must give complete information particularly as to size and location of sleeves, inserts, attachments, openings, conduits, ducts, boxes, and structural interferences. The composite shop drawings and field installation layouts shall be coordinated in the field by the Contractor and involved subcontractors for proper relationship to the work of other trades, based on field conditions, and shall be checked and approved by them before submission to the Architect for his final review. The Contractor shall have competent technical personnel readily available for such coordination and checking, as well as for the supervision of the field installation of the work in accordance with the approved shop drawings field installation layouts.

2. Identify details by reference to sheet and detail numbers shown on Contract Drawings.

3. Minimum sheet size shall be 8-1/2" x 11".

B. See submission requirements for additional requirements.

1.3 PRODUCT DATA

A. Manufacturer's Standard Schematic Drawings:

1. Modify drawings to delete information which is not applicable to project.

2. Supplement standard information to provide additional information applicable to project.

B. Manufacturer's catalog sheets, brochures, diagrams, schedules, performance charts, illustrations and other standard descriptive data.

1. Clearly mark each copy to identify pertinent materials, products or models.

2. Show dimensions and clearances required.

3. Shop performance characteristics and capacities.

4. Show wiring diagrams and controls.

1.4 SAMPLES

A. Submit in selected color and finish for final approval and comparison with products to be installed.

B. Office Samples: Of sufficient size and quantity to clearly illustrate:

1. Functional characteristics of product or material, with integrally related parts and attachment devices.

2. Submit samples of extreme color or texture ranges.

C. Color and Finish Selections Kits:

1. Submit samples in book or kit form as necessary for selection of color or finish.

2. Samples shall represent the full range of color and finish which are or will be available in the specified product at the time the project is built.

3. Colors or finishes of unusually high cost, slow delivery, or available only on special order shall be submitted along with normal range items. Their special nature shall be noted.

D. Submission of Samples:

1. Except where otherwise specified, samples shall be submitted in duplicate accompanied by a letter of transmittal (signed by the Contractor in triplicate.) Any samples received without a cover letter will be considered "unclaimed goods" and held for a limited time only. The letter shall contain the following:

a. Contractor's name.
b. Project name and number.
c. List of samples being submitted.
d. Trade section to which samples refer.
e. Number of standard (ASTM, USASI, Commercial Standard, Federal Spec.) if any, with which samples complies.
f. Manufacturer's name or source of supply.
g. Trade name.
h. Catalog number.
i. Other pertinent information.
j. Any deviation from contract requirements.
k. Contractors certification that he has checked all samples for compliance with contract requirements and availability of material represented thereby.

2. Each samples shall be labeled with the project name, project number, Contractor's name, trade name or other identification related to letter transmittal.

E. Rejection of Work Not Conforming to Approved Samples:

1. Samples submitted shall clearly show the full range of quality, color and texture which will be evident in finished work. Materials which do not conform to approved samples shall not be used on this project and shall be discarded immediately upon their discovery. The approval or acceptance of samples will not preclude the rejection of any material not complying with contract requirements which is discovered prior to end of warranty period.

1.5 CONTRACTOR'S RESPONSIBILITIES

A. Contractor's Approval:

1. Before submitting shop drawings, product data, or samples for approval, the Contractor shall check them for accuracy, shall ascertain that all work contiguous with and having bearing on other work is accurate and that the work shown is in conformance with the Contract requirements. All submittals at the time of submission must bear the Contractor's stamp of approval as evidence that such submittals have been checked by the Contractor. Any submittals forwarded without such executed stamp of approval or whenever it is evident (despite the stamp) that the submittals have not been checked, they will be returned to the Contractor for resubmission without further consideration; In such event, it will be deemed that the Contractor shall bear the risk of all delays to the same extent as if no submittals at all have been forwarded.

2. Before submitting samples to Architect for approval, the Contractor shall assure himself that material represented thereby conforms to Contract requirements and is readily available in quantity required.

B. Improper Checking or Coordination:

1. The cost, if any, of change in the work necessitated by improper checking or improper coordination shall be paid for by the Contractor.

C. Claims for Extra Cost:

1. All claims for extra cost must be justified in writing by the subcontractor as hidden/unknown conditions discovered after the time of bid, such claim is to be made on the Contractor=s letterhead of transmittal accompanying the submittal.

D. Delivery of Submissions to the Architect:

1. Submittals shall be sent to the Architect's office. Submittals shall be forwarded by the Contractor only, unless he has authorized another party to make submissions and has notified the Architect to this effect.

E. Contractor's Compliance:

1. The Contractor shall read and be familiar with all requirements of the Contract Documents concerning Shop Drawings, including the following:

a. The Contractor shall review and approve all shop drawings and stamp them accordingly, before forwarding them to the Architect.

b. By approving, stamping, and submitting shop drawings to the Architect, the Contractor represents that he has verified:

all field dimensions
all field construction criteria
all materials and respective finishes
all catalog numbers, and coordinated each shop drawing with the requirements of the work and Contract Documents

c. When submitting shop drawings, the Contractor shall notify the Architect, in writing of any deviations from the Contract Documents on the shop drawings.

d. The Contractor understands that the Architect's review and approval of shop drawings does not relieve the Contractor of responsibility for:

Deviations from the Contract Document requirements, unless the Architect is informed, in writing of the deviations and approval is received, in writing, from the Architect for such deviation.

The Contractor understands that the Architect's review and approval of shop drawings does not indicate approval of changes in the Contract Time or cost.

The Contractor understands that no work shall be started on any item requiring shop drawings until proper approval of shop drawings is given by the Architect and that such work shall be in accordance with approved shop drawings.

Submission and processing of shop drawings will be in accordance with Contract Document requirements and the related responsibilities herein.

1.6 SUBMISSION REQUIREMENTS

A. Shop Drawings:

1. Shop drawings shall be submitted in the form of prints in a quantity sufficient for final distribution of reviewed submittals accompanied by a letter of Transmittal in triplicate, signed by the Contractor. Drawings shall be bound in complete sets and transmitted to the Architect.

2. Manufacturer's brochure, products, product data and other descriptive information which cannot be submitted in sepia form shall be submitted as multiple copies. Submit in quantity sufficient for final distribution of approved submittals.

B. Manufacturer's Certificate

1. Where required by the specifications, submit manufacturer's affidavit certifying that material furnished for this project complies with Contract requirements.

C. Submittals Marked "Approved"

1. Submittals which require no corrections by the Architect will be marked "Approved".

D. Submittals Marked "Approved as Noted"

1. Submittals which require only a minor amount of correcting will be marked "Approved as Noted". This mark shall mean that checking is complete and all corrections are obvious without ambiguity. Fabrication will be allowed on work "Approved as Noted", provided such action will expedite construction and noted corrections are adhered to. If fabrication is not made strictly in accordance with corrections noted, the item shall be rejected in the field and the Contractor will be required to replace such work in accordance with corrected submittals, at his own expense.

E. Submittals Marked "Revise and Resubmit"

1. When submittals are marked "Revise and Resubmit", details of items noted by Architect shall be further clarified before approval can be given and noted items must not be fabricated until corrected and approved. Unmarked items may be fabricated unless otherwise directed.

F. Submittals Marked "Not Approved"

1. When submittals are contrary to contract requirements or too many corrections are required, they shall be marked "Not Approved". No work shall be fabricated under this mark. The Architect shall list his reasons for rejection on the submittals or in the transmittal letter accompanying their return. The submittals must be corrected and resubmitted for approval.

G. Return of Submittals to Contractor Unchecked

1. The Architect may return submittals to the Contractor for any of the following reasons, in which case the submission will not be considered official:

a. Submitted in violation of specified procedure.
b. Inadequately checked by Contractor.
c. Inaccurate and in substantial error.

1.7 RESUBMISSION REQUIREMENTS

A. Resubmission of Corrected Submittals

1. No changes shall be made by the Contractor to resubmitted shop drawings or product date in excess of those corrections noted by the Architect unless accompanied by a letter explaining the additional changes.

1.8 DISTRIBUTION OF SUBMITTALS AFTER REVIEW

A. After all corrections, changes and resubmittals have been made, the Contractor shall provide

the following number of reviewed submittals, bearing his stamp of final approval, distributed as follows:

	Letter	Selection Sample	Record Sample	Shop Drawing	Report Certificate
Owner	1			2	1
Architect	1	1	1	1	1
Contractor	1			4	

1.9 ARCHITECT'S DUTIES

A. Architect's Approval

1. The Architect's approval will be only general in nature and shall not be construed as permitting any departure from Contract requirements, or as relieving the Contractor of responsibility for any errors, including details, dimensions or materials. If submittals show variations from Contract requirements the Architect may approve any or all such variations, subject to proper adjustment in the Contract. If the Contractor fails to describe such variation he shall not be relieved of the responsibility for executing the work in accordance with the Contract Documents, even though such submittals have been approved.

B. Approval of Products and Workmanship

1. Work of all trades (especially those which when finished will be permanently visible or must function faultlessly) will be subject to the following sequence of approval by the Architect.

a. Each trade shall submit one complete list of all materials proposed for use on the Project, which shall be approved by the Architect. The list shall include all necessary information to show compliance with requirements of the Specification.

b. Required product samples shall be submitted to the Architect for their approval.

c. Before work on any portion is started and if requested by the Architect, representative in-place samples of any specified work, shall be installed in the Architect's presence. In-place samples, when approved by the Architect shall become the standard for all similar work on the Project. The Contractor shall coordinate and schedule all in-place sample installations, which have been requested by the Architect so that:

All sample work shall be done on the same day, when one or more samples are requested of one or more trades.

Forty-eight (48) hours notice shall be given to the Architect before work starts.

C. Architect's Retention of Submittals for Future Checking

1. Where partial submissions cannot be checked until the complete submission has been received, or where correlation is required between material submitted and material not yet submitted, the Architect will advise the Contractor in writing that the submission will not be checked until all pertinent information is received and that the submission will not be considered official until it is complete in every aspect.

PART 2 - PRODUCTS

Not Used

PART 3 - EXECUTION

Not Used

END OF SECTION

SECTION 01 50 00

TEMPORARY FACILITIES AND CONTROLS

PART 1 - GENERAL

1.1 TEMPORARY FACILITIES

A. The Contractor shall furnish and maintain, during construction of the project, adequate facilities at the site for the use of himself as set forth below. Upon completion of the project, or as directed by the Architect, the Contractor shall remove all such temporary structures and facilities from the site, same to become his property and leave the premises in the condition required by the Contract.

B. The Contractor and his subcontractors may maintain temporary facilities on the site in addition to those specified as may be necessary for the proper conduct of the work. These shall be located so as to cause no interference to any Contract work or occupied areas.

C. Materials for temporary construction shall be hereinafter specified for various items, or when not so specified, shall be species and type suitable to the particular use and approved by the Architect. Salvaged materials which are in a safe and serviceable condition will generally be acceptable for such temporary construction. However, no split, splintered, deformed, ruptured, or similarly defective materials will be permitted. All materials for temporary construction shall be clean and dry. Materials which cannot be placed in a presentable condition will not be acceptable.

D. All temporary facilities herein specified shall remain locked when not in use by contractors.

1.2 TEMPORARY OFFICE

The Contractor may, but not required to, maintain a temporary office for the project. The office may be equipped with a telephone listed in the Contractor's name, and other facilities as the Contractor may require. Provision of this temporary space must be coordinated with the Owner.

1.3 TEMPORARY WATER SERVICE

A. Cold water may exist in the area of operations.

B. The Owner will assume cost of water consumed if available, if responsible care and restraint is exercised by the Contractor in its use.

1.4 TEMPORARY ELECTRICAL SERVICE

A. The Contractor shall make all necessary arrangements for temporary electricity for construction purposes, and furnish at his own expense, all temporary wiring, lamps, and accessories required for the completion of the work.

B. The Owner shall provide the current; however, no improper, wasteful, or undue use of electrical service will be permitted.

1.5 EXISTING UTILITIES

Prior to the closeout of the Project, the Contractor shall remove all temporary connections and return all sources to their original conditions prior to commencement of the work.

1.6 PARKING

A. Location of contractor parking shall be coordinated with the Owner.

PART 2 - PRODUCTS
Not Used

PART 3 - EXECUTION
Not Used

END OF SECTION

SECTION 01 66 00

PRODUCT STORAGE AND HANDLING REQUIREMENTS

PART 1 - GENERAL

A. Sheds and Platforms: Waterproof shelter shall be provided for the storage of all materials subject to spoilage from water. Lumber shall be stored off the ground and kept dry. Platforms shall be provided for the storage of products likely to be stained if improperly stored.

B. Storage Spaces: Limited space is available on the site for the storage of products, erection of offices, sheds, etc. Where possible the delivery of products shall be scheduled as to require a minimum of on-site storage.

C. Transportation: All products shall be so crated, blocked and otherwise protected during transportation and handling to prevent staining, chipping, breakage, or any other physical damage. The Contractor shall provide any necessary lifting devices or machines, and the skilled personnel to operate such machines, necessary to handle products to prevent such damage.

D. Store and protect all materials to be installed according to manufacturer's recommendations.

PART 2 - PRODUCTS

Not Used

PART 3 - EXECUTION

Not Used

END OF SECTION

This page intentionally left blank.

SECTION 01 74 19

CONSTRUCTION WASTE MANAGEMENT AND DISPOSAL

PART 1 – GENERAL

1.1 SUMMARY

A. Section includes: Administrative and procedural requirements for construction waste management activities.

1.2 DEFINITIONS

A. Construction, Demolition, and Land clearing (CDL) Waste: Includes all non-hazardous solid wastes resulting from construction, remodeling, alterations, repair, demolition, and land clearing. Includes material that is recycled, reused, salvaged, or disposed as garbage.

B. Salvage: Recovery of materials for on-site reuse, sale or donation to a third party.

C. Reuse: Making use of a material without altering its form. Materials can be reused on-site or reused on other projects off-site. Examples include, but are not limited to the following: Crushing or grinding of concrete for use as sub-base material. Chipping of land clearing debris for use as mulch.

D. Recycling: The process of sorting, cleaning, treating, and reconstituting materials for the purpose of using the material in the manufacture of a new product.

E. Source-Separated CDL Recycling: The process of separating recyclable materials in separate containers as they are generated on the jobsite. The separated materials are hauled directly to a recycling facility or transfer station.

F. Co-mingled CDL Recycling: The process of collecting mixed recyclable materials in one container on-site. The container is taken to a material recovery facility where materials are separated for recycling.

G. Approved Recycling Facility: Any of the following:

1. A facility that can legally accept CDL waste materials for the purpose of processing the materials into an altered form for the manufacture of a new product.

2. Material Recovery Facility: A general term used to describe a waste-sorting facility. Mechanical, hand-separation, or a combination of both procedures, are used to recover recyclable materials.

H. Universal waste components (UWC) are as follows: electric motors, PCB ballasts, non-PCB ballasts, capacitors, contactors, circuit breakers, elemental and liquid mercury containing articles, transformers, lead acid batteries, fluorescent light bulbs, and all HID light bulbs.

1.3 SUBMITTALS

A. Contractor shall develop a Waste Management Plan: Submit 3 copies of plan within 14 days of date established for the **Notice to Proceed**.

B. Contractor shall provide Waste Management Report: Concurrent with each Application for Payment, submit **3** copies of report.

1.4 PERFORMANCE REQUIREMENTS

A. General: Divert a minimum of 75**%** CDL waste, by weight, from the landfill by one, or a combination of the following activities:

1. Salvage
2. Reuse
3. Source-Separated CDL Recycling
4. Co-mingled CDL Recycling

B. CDL waste materials that can be salvaged, reused or recycled include, but are not limited to, the following:

1. Acoustical ceiling tiles
2. Asphalt
3. Asphalt shingles
4. Cardboard packaging
5. Carpet and carpet pad
6. Concrete
7. Drywall
8. Fluorescent lights and ballasts
9. Land clearing debris (vegetation, stumpage, dirt)
10. Metals
11. Paint (through hazardous waste outlets)
12. Wood
13. Plastic film (sheeting, shrink wrap, packaging)
14. Window glass
15. Wood
16. Field office waste, including office paper, aluminum cans, glass, plastic, and office cardboard.

1.5 QUALITY ASSURANCE

A. Waste Management Coordinator Qualifications: Experienced firm, with a record of successful waste management coordination of projects with similar requirements, that employs a LEED Accredited Professional, certified by the USGBC as waste management coordinator.

B. Refrigerant Recovery Technician Qualifications: Certified by EPA-approved certification program.

C. Regulatory Requirements: Conduct construction waste management activities in accordance with hauling and disposal regulations of all authorities having jurisdiction and all other applicable laws and ordinances.

D. Preconstruction Conference: Schedule and conduct meeting at Project site prior to construction activities.

1. Attendees: Inform the following individuals, whose presence is required, of date and time of meeting.

a. Owner
b. Architect
c. Contractor's superintendent
d. Major subcontractors
e. Waste Management Coordinator
f. Other concerned parties.

2. Agenda Items: Review methods and procedures related to waste management including, but not limited to, the following:

a. Review and discuss waste management plan including responsibilities of Waste Management Coordinator.
b. Review requirements for documenting quantities of each type of waste and its disposition.
c. Review and finalize procedures for materials separation and verify availability of containers and bins needed to avoid delays.
d. Review procedures for periodic waste collection and transportation to recycling and disposal facilities.
e. Review waste management requirements for each trade.

3. Minutes: Record discussion. Distribute meeting minutes to all participants.
Note: If there is a Project Architect, they will perform this role.

1.6 WASTE MANAGEMENT PLAN – Contactor shall develop and document the following:

A. Develop a plan to meet the requirements listed in this section at a minimum. Plan shall consist of waste identification, waste reduction plan and cost/revenue analysis. Distinguish between demolition and construction waste. Indicate quantities by weight throughout the plan.

B. Indicate anticipated types and quantities of demolition, site-cleaning and construction waste generated by the project. List all assumptions made for the quantities estimates.

C. List each type of waste and whether it will be salvaged, recycled, or disposed of in an landfill. The plan should included the following information:

1. Types and estimated quantities, by weight, of CDL waste expected to be generated during demolition and construction.

2. Proposed methods for CDL waste salvage, reuse, recycling and disposal during demolition including, but not limited to, one or more of the following:

    a. Contracting with a deconstruction specialist to salvage materials generated,
    b. Selective salvage as part of demolition contractor's work,
    c. Reuse of materials on-site or sale or donation to a third party.

3. Proposed methods for salvage, reuse, recycling, and disposal during construction including, but not limited to, one or more of the following:

    a. Requiring subcontractors to take their CDL waste to a recycling facility;
    b. Contracting with a recycling hauler to haul recyclable CDL waste to an approved recycling or material recovery facility;
    c. Processing and reusing materials on-site;
    d. Self-hauling to a recycling or material recovery facility.

4. Name of recycling or material recovery facility receiving the CDL wastes.

5. Handling and Transportation Procedures: Include method that will be used for separating recyclable waste including sizes of containers, container labeling, and designated location on project site where materials separation will be located.

D. Cost/Revenue Analysis: Indicate total cost of waste disposal as if there was no waste management plan and net additional cost or net savings resulting from implementing waste management plan. Include the following:

1. Total quantity of waste.
2. Estimated cost of disposal (cost per unit). Include hauling and tipping fees and cost of collection containers for each type of waste.
3. Total cost of disposal (with no waste management).
4. Revenue from salvaged materials.
5. Revenue from recycled materials.
6. Savings in hauling and tipping fees by donating materials.
7. Savings in hauling and tipping fees that are avoided.
8. Handling and transportation costs. Including cost of collection containers for each type of waste.
9. Net additional cost or net savings from waste management plan.

PART 2 - PRODUCTS (Not Used)

PART 3 – EXECUTION

3.1 CONSTRUCTION WASTE MANAGEMENT, GENERAL

A. Provide containers for CDL waste that is to be recycled clearly labeled as such with a list of acceptable and unacceptable materials. The list of acceptable materials must be the same as the materials recycled at the receiving material recovery facility or recycling processor.

B. The collection containers for recyclable CDL waste must contain no more than 10% non-recyclable material, by volume.

C. Provide containers for CDL waste that is disposed in a landfill clearly labeled as such.

D. Use detailed material estimates to reduce risk of unplanned and potentially wasteful cuts.

E. To the greatest extent possible, include in material purchasing agreements a waste reduction provision requesting that materials and equipment be delivered in packaging made of recyclable material, that they reduce the amount of packaging, that packaging be taken back for reuse or recycling, and to take back all unused products. Ensure that subcontractors require the same provisions in their purchase agreements.

F. Conduct regular visual inspections of dumpsters and recycling bins to remove contaminants.

3.2 SOURCE SEPARATION

A. General: Contractor shall separate recyclable materials from CDL waste to the maximum extent possible.

Separate recyclable materials by type.

1. Provide containers, clearly labeled, by type of separated materials or provide other storage method for managing recyclable materials until they are removed from Project site.
2. Stockpile processed materials on-site without intermixing with other materials. Place, grade, and shape stockpiles to drain surface water and to minimize pest attraction. Cover to prevent windblown dust.
3. Stockpile materials away from demolition area. Do not store within drip line of remaining trees.
4. Store components off the ground and protect from weather.

3.3 CO-MINGLED RECYCLING

A. General: Do not put CDL waste that will be disposed in a landfill into a co-mingled CDL waste recycling container.

3.4 REMOVAL OF CONSTRUCTION WASTE MATERIALS

A. Remove CDL waste materials from project site on a regular basis. Do not allow CDL waste to accumulate on-site.

B. Transport CDL waste materials off Owner's property and legally dispose of them.

C. Burning of CDL waste is not permitted.

3.5 UNIVERSAL WASTE DIVERSION

A. Remove all universal waste from fixtures, panels, and related devices for proper diversion and reclamation.

B. Store all universal waste in containers provided by contact person within facilities operations.

C. Store all universal waste in a secured location and request periodic removal from assigned contact person.

D. Exemption: electric motors, circuit breakers, transformers and lighting contactors are exempt from this provision provided the contractor chooses to salvage or reuse the components.

E. No identified universal waste will be discarded into the waste stream.

END OF SECTION

WASTE MANAGEMENT PROGRESS REPORT				
	DISPOSED IN MUNICIPAL SOLID WASTE LANDFILL	**DIVERTED FROM LANDFILL BY RECYCLING, SALVAGE OR REUSE**		
MATERIAL CATEGORY		Recycled	Salvaged	Reused
1. Acoustical Ceiling Tiles				
2. Asphalt				
3. Asphalt Shingles				
4. Cardboard Packaging				
5. Carpet and Carpet Pad				
6. Concrete				
7. Drywall				
8. Fluorescent Lights and Ballasts				
9. Land Clearing Debris (vegetation, stumpage, dirt)				
10. Metals				
11. Paint (through hazardous waste outlets)				
12. Wood				
13. Plastic Film (sheeting, shrink wrap, packaging)				
14. Window Glass				
15. Field Office Waste (office paper, aluminum cans, glass, plastic, and coffee cardboard)				
16. Other (insert description)				
17. Other (insert description)				
Total (In Weight)		(TOTAL OF ALL ABOVE VALUES – IN WEIGHT)		
		Percentage of Waste Diverted	(TOTAL WASTE DIVIDED BY TOTAL DIVERTED)	

SECTION 01 77 00

CLOSEOUT PROCEDURES

PART 1 - GENERAL

1.1 PROJECT RECORD DOCUMENT PACKAGE

A. Maintenance of Documents

1. Maintain one copy of Contract Drawings, Specifications, Addenda, review shop drawings, change orders, field records, surveys, and layout records.

2. Store documents apart from documents used for construction. Maintain documents in clean, dry, legible condition. Do not use record documents for construction purposes.

3. Make documents available at all times for inspection by Architect. Update all documents at least monthly.

B. Recording

1. Stamp each document "PROJECT RECORD" 3/4 inch high letters.

2. Do not permanently conceal any work until required information has been recorded.

C. Record Drawing: The Contractor shall keep a set of up-to-date marked prints of the "as-built conditions". The contract drawings shall be legibly marked to record actual construction such as:

1. Horizontal and vertical location of underground utilities referenced to permanent surface improvements.

2. Underground obstacles encountered and lines capped during construction.

3. Location of internal utilities concealed in construction referenced to visible and accessible features of structure.

4. Field alterations of dimensions and detail.

5. Changes made by Change Order.

6. Details not on original contract drawings.

D. Specifications and Addenda: Bind together.

E. Approved Shop Drawings and Brochures: Maintain as record documents. Legibly note to record any changes made after review.

F. Submitting: At completion of project, deliver record documents to Architect for transmittal to Owner as a package.

G. Accompany submittal with transmittal letter, in duplicate, containing date, project, Contractor's name and address, title and number of each record document, and certification that each document as submitted is complete and accurate, signed by Contractor.

H. The following documents are required from the contractor at project closeout, as applicable:

1. 2 original Form G704 Substantial Completion
2. 2 original Form G706 Affidavit of Payment of Debts and Claims
3. 2 original Form 706A Release of Liens Contractor/Subcontractor
4. 2 original Form 707 Consent of Surety Company
5. 3 original Final Payment App
6. 2 original Warranties (Letter of Guarantee and Warranty Info)
7. 2 O&M Manuals
8. 2 Hard Copy of As-Built Drawings
9. Permits
10. 2 sets of Record Shop Drawings and submittals
11. Affidavit of Discharge of State Tax Liability
12. Copy of completed final punch list signed off on by Owner's Rep

I. Provide all documents in two (2) 3-ring binders & CD's with label to include the project title, project number and closeout documents.

1.2 GUARANTEES, BONDS AND AFFIDAVITS

A. Turn over guarantees, warranties, bonds and affidavits on various materials, neatly bound and in order, to the Architect for deliver to the Owner as part of the package.

B. Affidavits verifying payments of all bills related to the project, release of liens (AIA G706A, AIA G706 and AIA G707) for all subcontractors, bonding company approvals and consent of surety to final payment shall be required.

C. Certification that all construction materials used and equipment supplied for this project are free of known hazardous materials such as PCBs and asbestos.

D. Substantial completion certification signed by Owner, Architect, and Contractor.

1.3 OPERATION AND MAINTENANCE DATA

A. Turn over manuals and instructions, neatly bound and in order, to the Architect for delivery to the Owner.

1.4 EXTRA STOCK, SPARE PARTS, INSTRUCTION

A. Turn over extra stock as specified in other sections of the specifications to the person

designated by the Owner to be in charge of the operation and maintenance of the building.

B. Provide instruction in operation and maintenance of equipment and finishes. Conduct meeting and individual training as needed to inform owner's operating personnel.

C. Provide special tools for such items as louver vanes, adjustable dampers, thermostats, allen-head locking devices in triplicate.

PART 2 - PRODUCTS
Not Used

PART 3 - EXECUTION
Not Used

END OF SECTION

This page intentionally left blank.

SECTION 02 41 00

DEMOLITION

PART 1 GENERAL

1.01 SECTION INCLUDES

A. Selective demolition of building elements for alteration purposes.

PART 2 PRODUCTS

Not used.

PART 3 EXECUTION

3.01 GENERAL PROCEDURES AND PROJECT CONDITIONS

A. Comply with applicable codes and regulations for demolition operations and safety of adjacent structures and the public.
   1. Provide, erect, and maintain temporary barriers and security devices.
   2. Conduct operations to minimize effects on and interference with adjacent structures and occupants.
   3. Conduct operations to minimize obstruction of public and private entrances and exits; do not obstruct required exits at any time; protect persons using entrances and exits from removal operations.

B. Protect existing structures and other elements that are not to be removed.
   1. Provide bracing and shoring.
   2. Prevent movement or settlement of adjacent structures.
   3. Stop work immediately if adjacent structures appear to be in danger.

3.02 EXISTING UTILITIES

A. Protect existing utilities to remain from damage.

B. Do not disrupt public utilities without permit from authority having jurisdiction.

C. Do not close, shut off, or disrupt existing utility branches or take-offs that are in use without at least 3 days prior written notification to Owner.

3.03 SELECTIVE DEMOLITION FOR ALTERATIONS

A. Drawings showing existing construction and utilities are based on casual field observation and existing record documents only.
   1. Verify that construction and utility arrangements are as indicated.
   2. Report discrepancies to Architect before disturbing existing installation.

3. Beginning of demolition work constitutes acceptance of existing conditions that would be apparent upon examination prior to starting demolition.

B. Remove existing work as indicated and as required to accomplish new work.
   1. Remove items indicated on drawings.

C. Services (Including but not limited to HVAC, Plumbing, Electrical, and Telecommunications Remove existing systems and equipment as indicated.
   1. Maintain existing active systems that are to remain in operation; maintain access to equipment and operational components.
   2. Where existing active systems serve occupied facilities but are to be replaced with new services, maintain existing systems in service until new systems are complete and ready for service.

D. Protect existing work to remain.
   1. Prevent movement of structure; provide shoring and bracing if necessary.
   2. Perform cutting to accomplish removals neatly and as specified for cutting new work.
   3. Repair adjacent construction and finishes damaged during removal work.
   4. Patch as specified for patching new work.

3.04 DEBRIS AND WASTE REMOVAL

A. Remove debris, junk, and trash from site.

B. Leave site in clean condition, ready for subsequent work.

C. Clean up spillage and wind-blown debris from public and private lands.

END OF SECTION

SECTION 03 30 00

CAST-IN-PLACE CONCRETE

PART 1 - GENERAL

1.1 SUMMARY

A. Section includes cast-in-place concrete, including formwork, reinforcement, concrete materials, mixture design, placement procedures, and finishes.

1.2 ACTION SUBMITTALS

A. Design Mixtures: For each concrete mixture.

B. Steel Reinforcement Shop Drawings: Placing drawings that detail fabrication, bending, and placement.

1.3 QUALITY ASSURANCE

A. Manufacturer Qualifications: A firm experienced in manufacturing ready-mixed concrete products and that complies with ASTM C 94/C 94M requirements for production facilities and equipment.

1. Manufacturer certified according to NRMCA's "Certification of Ready Mixed Concrete Production Facilities."

B. Testing Agency Qualifications: An independent agency, qualified according to ASTM C 1077 and ASTM E 329 for testing indicated.

C. Welding Qualifications: Qualify procedures and personnel according to AWS D1.4/D 1.4M, "Structural Welding Code - Reinforcing Steel."

D. ACI Publications: Comply with the following unless modified by requirements in the Contract Documents:

1. ACI 301, "Specifications for Structural Concrete,"
2. ACI 117, "Specifications for Tolerances for Concrete Construction and Materials."

E. Concrete Testing Service: Engage a qualified independent testing agency to perform material evaluation tests and to design concrete mixtures.

PART 2 - PRODUCTS

2.1 FORM-FACING MATERIALS

A. Smooth-Formed Finished Concrete: Form-facing panels that will provide continuous, true, and smooth concrete surfaces. Furnish in largest practicable sizes to minimize number of joints.

B. Rough-Formed Finished Concrete: Plywood, lumber, metal, or another approved material. Provide lumber dressed on at least two edges and one side for tight fit.

2.2 STEEL REINFORCEMENT

A. Reinforcing Bars: ASTM A 615/A 615M, Grade 60 (Grade 420), deformed.

B. Plain-Steel Welded Wire Reinforcement: ASTM A 185/A 185M, plain, fabricated from as-drawn steel wire into flat sheets.

C. Bar Supports: Bolsters, chairs, spacers, and other devices for spacing, supporting, and fastening reinforcing bars and welded wire reinforcement in place. Manufacture bar supports from steel wire, plastic, or precast concrete according to CRSI's "Manual of Standard Practice.

2.3 CONCRETE MATERIALS

A. Cementitious Material: Use the following cementitious materials, of the same type, brand, and source, throughout Project:

1. Portland Cement: ASTM C 150, Type I/II Retain supplementary cementing materials from first two subparagraphs below if permitted. Ready-mix concrete manufacturer blends these materials with portland cement. Fly ash, slag, or pozzolanic materials may slow rate of concrete strengthening and affect color uniformity. Availability of Class F fly ash predominates over Class C fly ash.

a. Fly Ash: ASTM C 618, Class F or C.
b. Ground Granulated Blast-Furnace Slag: ASTM C 989, Grade 100 or 120.

2. Blended Hydraulic Cement: ASTM C 595, Type IS, portland blast-furnace slag cement.

B. Normal-Weight Aggregates: ASTM C 33, graded.

1. Maximum Coarse-Aggregate Size: 1 inch (25 mm) nominal.

2. Fine Aggregate: Free of materials with deleterious reactivity to alkali in cement.

C. Water: ASTM C 94/C 94M and potable.

2.4 ADMIXTURES

A. Air-Entraining Admixture: ASTM C 260.

B. Chemical Admixtures: Provide admixtures certified by manufacturer to be compatible with other admixtures and that will not contribute water-soluble chloride ions exceeding those permitted in hardened concrete. Do not use calcium chloride or admixtures containing calcium chloride.

1. Water-Reducing Admixture: ASTM C 494/C 494M, Type A.
2. Retarding Admixture: ASTM C 494/C 494M, Type B.
3. Water-Reducing and Retarding Admixture: ASTM C 494/C 494M, Type D.
4. High-Range, Water-Reducing Admixture: ASTM C 494/C 494M, Type F.
5. High-Range, Water-Reducing and Retarding Admixture: ASTM C 494/C 494M, Type G.
6. Plasticizing and Retarding Admixture: ASTM C 1017/C 1017M, Type II.

2.5 VAPOR RETARDERS

A. Sheet Vapor Retarder: Polyethylene sheet, ASTM D 4397, not less than 10 mils (0.25 mm) thick.

2.6 CURING MATERIALS

A. Evaporation Retarder: Waterborne, monomolecular film forming, manufactured for application to fresh concrete.

B. Absorptive Cover: AASHTO M 182, Class 2, burlap cloth made from jute or kenaf, weighing approximately 9 oz./sq. yd. (305 g/sq. m) when dry.

C. Moisture-Retaining Cover: ASTM C 171, polyethylene film or white burlap-polyethylene sheet.

D. Water: Potable.

E. Clear, Waterborne, Membrane-Forming Curing Compound: ASTM C 309, Type 1, Class B, dissipating.

F. Clear, Waterborne, Membrane-Forming Curing Compound: ASTM C 309, Type 1, Class B, nondissipating, certified by curing compound manufacturer to not interfere with bonding of floor covering.

G. Clear, Solvent-Borne, Membrane-Forming Curing and Sealing Compound: ASTM C 1315, Type 1, Class A.

1. VOC Content: Curing and sealing compounds shall have a VOC content of 200 g/L or less when calculated according to 40 CFR 59, Subpart D (EPA Method 24).

H. Clear, Waterborne, Membrane-Forming Curing and Sealing Compound: ASTM C 1315, Type 1, Class A.

1. VOC Content: Curing and sealing compounds shall have a VOC content of 200 g/L or less when calculated according to 40 CFR 59, Subpart D (EPA Method 24).

2.7 RELATED MATERIALS

A. Expansion- and Isolation-Joint-Filler Strips: ASTM D 1751, asphalt-saturated cellulosic fiber.

2.8 CONCRETE MIXTURES

A. Prepare design mixtures for each type and strength of concrete, proportioned on the basis of laboratory trial mixture or field test data, or both, according to ACI 301.

B. Cementitious Materials: Use fly ash, pozzolan, ground granulated blast-furnace slag, and silica fume as needed to reduce the total amount of portland cement, which would otherwise be used, by not less than 41 percent.

C. Admixtures: Use admixtures according to manufacturer's written instructions.

1. Use water-reducing, high-range water-reducing or plasticizing admixture in concrete, as required, for placement and workability.
2. Use water-reducing and retarding admixture when required by high temperatures, low humidity, or other adverse placement conditions.
3. Use water-reducing admixture in pumped concrete, concrete for heavy-use industrial slabs and parking structure slabs, concrete required to be watertight, and concrete with a water-cementitious materials ratio below 0.50.

2.9 CONCRETE MIXTURES FOR BUILDING ELEMENTS

A. Proportion normal-weight concrete mixture for footings as follows:

1. Minimum Compressive Strength: 3500 psi (21.4 MPa) at 28 days.
2. Maximum Water-Cementitious Ratio: 0.50.
3. Slump Limit: 4 inches (100 mm) or 8 inches (200 mm) for concrete with verified slump of 2 to 4 inches (50 to 100 mm) before adding high-range water-reducing or plasticizing admixture, plus or minus 1 inch (25 mm).

B. Proportion normal-weight concrete mixture for slabs-on-grade as follows:

1. Minimum Compressive Strength: 3500 psi (21.4 MPa) at 28 days.
2. Maximum Water-Cementitious Ratio: 0.50.
3. Slump Limit: 4 inches (100 mm) or 8 inches (200 mm) for concrete with verified slump of 2 to 4 inches (50 to 100 mm) before adding high-range water-reducing or plasticizing admixture, plus or minus 1 inch (25 mm).

C. Proportion normal-weight concrete mixture for piers as follows:

1. Minimum Compressive Strength: 4000 psi (27.6 MPa) at 28 days.
2. Maximum Water-Cementitious Ratio: 0.45.
3. Slump Limit: 4 inches (100 mm) or 8 inches (200 mm) for concrete with verified slump of 2 to 4 inches (50 to 100 mm) before adding high-range water-reducing or plasticizing admixture, plus or minus 1 inch (25 mm).
4. Air Content: 5-1/2 percent, plus or minus 1-1/2 percent at point of delivery for 1-1/2 inch (38 mm) nominal maximum aggregate size.

2.9 CONCRETE MIXING

A. Ready-Mixed Concrete: Measure, batch, mix, and deliver concrete according to ASTM C 94/C 94M and furnish batch ticket information.

1. When air temperature is between 85 and 90 deg F (30 and 32 deg C), reduce mixing and delivery time from 1-1/2 hours to 75 minutes; when air temperature is above 90 deg F (32 deg C), reduce mixing and delivery time to 60 minutes.

PART 3 - EXECUTION

3.1 FORMWORK

A. Design, erect, shore, brace, and maintain formwork, according to ACI 301, to support vertical, lateral, static, and dynamic loads, and construction loads that might be applied, until structure can support such loads.

B. Construct formwork so concrete members and structures are of size, shape, alignment, elevation, and position indicated, within tolerance limits of ACI 117.

C. Chamfer exterior corners and edges of permanently exposed concrete.

3.2 EMBEDDED ITEMS

A. Place and secure anchorage devices and other embedded items required for adjoining work that is attached to or supported by cast-in-place concrete. Use setting drawings, templates, diagrams, instructions, and directions furnished with items to be embedded.

3.3 VAPOR RETARDERS

A. Sheet Vapor Retarders: Place, protect, and repair sheet vapor retarder according to ASTM E 1643 and manufacturer's written instructions.

1. Lap joints 6 inches (150 mm) and seal with manufacturer's recommended tape.

3.4 STEEL REINFORCEMENT

A. General: Comply with CRSI's "Manual of Standard Practice" for placing reinforcement.

1. Do not cut or puncture vapor retarder. Repair damage and reseal vapor retarder before placing concrete.

3.5 JOINTS

A. General: Construct joints true to line with faces perpendicular to surface plane of concrete.

B. Construction Joints: Install so strength and appearance of concrete are not impaired, at locations indicated or as approved by Architect.

C. Contraction Joints in Slabs-on-Grade: Form weakened-plane contraction joints, sectioning concrete into areas as indicated. Construct contraction joints for a depth equal to at least one-fourth of concrete thickness as follows:

1. Grooved Joints: Form contraction joints after initial floating by grooving and finishing each edge of joint to a radius of 1/8 inch (3.2 mm) for sidewalks. Repeat grooving of contraction joints after applying surface finishes. Eliminate groover tool marks on concrete surfaces.

2. Sawed Joints: Form contraction joints with power saws equipped with shatterproof abrasive or diamond-rimmed blades. Cut 1/8-inch- (3.2-mm-) wide joints into concrete when cutting action will not tear, abrade, or otherwise damage surface and before concrete develops random contraction cracks.

D. Isolation Joints in Slabs-on-Grade: After removing formwork, install joint-filler strips at slab junctions with vertical surfaces, such as column pedestals, foundation walls, grade beams, and other locations, as indicated.

3.6 CONCRETE PLACEMENT

A. Before placing concrete, verify that installation of formwork, reinforcement, and embedded items is complete and that required inspections have been performed.

B. Deposit concrete continuously in one layer or in horizontal layers of such thickness that no new concrete will be placed on concrete that has hardened enough to cause seams or planes of weakness. If a section cannot be placed continuously, provide construction joints as indicated. Deposit concrete to avoid segregation.

1. Consolidate placed concrete with mechanical vibrating equipment according to ACI 301.

C. Cold-Weather Placement: Comply with ACI 306.1.

D. Hot-Weather Placement: Comply with ACI 301.

3.7 FINISHING FORMED SURFACES

A. Rough-Formed Finish: As-cast concrete texture imparted by form-facing material with tie holes and defects repaired and patched. Remove fins and other projections that exceed specified limits on formed-surface irregularities.

   1. Apply to concrete surfaces not exposed to view.

B. Smooth-Formed Finish: As-cast concrete texture imparted by form-facing material, arranged in an orderly and symmetrical manner with a minimum of seams. Repair and patch tie holes and defects. Remove fins and other projections that exceed specified limits on formed-surface irregularities.

   1. Apply to concrete surfaces exposed to view.

C. Rubbed Finish: Apply the following to smooth-formed finished as-cast concrete where indicated:

   1. Smooth-Rubbed Finish: Not later than one day after form removal, moisten concrete surfaces and rub with carborundum brick or another abrasive until producing a uniform color and texture. Do not apply cement grout other than that created by the rubbing process.

D. Related Unformed Surfaces: At tops of walls, horizontal offsets, and similar unformed surfaces adjacent to formed surfaces, strike off smooth and finish with a texture matching adjacent formed surfaces. Continue final surface treatment of formed surfaces uniformly across adjacent unformed surfaces unless otherwise indicated.

3.8 FINISHING FLOORS AND SLABS

A. General: Comply with ACI 302.1R recommendations for screeding, restraightening, and finishing operations for concrete surfaces. Do not wet concrete surfaces.

B. Scratch Finish: While still plastic, texture concrete surface that has been screeded and bull-floated or darbied. Use stiff brushes, brooms, or rakes to produce a profile amplitude of 1/4 inch (6 mm) in one direction.

   1. Apply scratch finish to surfaces to receive concrete floor toppings and to receive mortar setting beds for bonded cementitious floor finishes.

C. Float Finish: Consolidate surface with power-driven floats or by hand floating if area is small or inaccessible to power driven floats. Restraighten, cut down high spots, and fill low spots. Repeat float passes and restraightening until surface is left with a uniform, smooth, granular texture.

   1. Apply float finish to surfaces to receive trowel finish.

D. Trowel Finish: After applying float finish, apply first troweling and consolidate concrete by hand or power-driven trowel. Continue troweling passes and restraighten until surface is free of

trowel marks and uniform in texture and appearance. Grind smooth any surface defects that would telegraph through applied coatings or floor coverings.

1. Apply a trowel finish to surfaces exposed to view.
2. Finish and measure surface so gap at any point between concrete surface and an unleveled, freestanding, 10-ft.- (3.05-m-) long straightedge resting on two high spots and placed anywhere on the surface does not exceed 1/4 inch (6 mm).

E. Trowel and Fine-Broom Finish: Apply a first trowel finish to surfaces where ceramic or quarry tile is to be installed by either thickset or thin-set method. While concrete is still plastic, slightly scarify surface with a fine broom.

1. Comply with flatness and levelness tolerances for trowel-finished floor surfaces.

F. Broom Finish: Apply a broom finish to exterior concrete platforms, steps, ramps, and elsewhere as indicated.

3.9 CONCRETE PROTECTING AND CURING

A. General: Protect freshly placed concrete from premature drying and excessive cold or hot temperatures. Comply with ACI 306.1 for cold-weather protection and ACI 301 for hot-weather protection during curing.

B. Evaporation Retarder: Apply evaporation retarder to unformed concrete surfaces if hot, dry, or windy conditions cause moisture loss approaching 0.2 lb/sq. ft. x h (1 kg/sq. m x h) before and during finishing operations. Apply according to manufacturer's written instructions after placing, screeding, and bull floating or darbying concrete, but before float finishing.

C. Cure concrete according to ACI 308.1, by one or a combination of the following methods:

1. Moisture Curing: Keep surfaces continuously moist for not less than seven days.
2. Moisture-Retaining-Cover Curing: Cover concrete surfaces with moisture-retaining cover for curing concrete, placed in widest practicable width, with sides and ends lapped at least 12 inches (300 mm), and sealed by waterproof tape or adhesive. Cure for not less than seven days. Immediately repair any holes or tears during curing period using cover material and waterproof tape.
3. Curing Compound: Apply uniformly in continuous operation by power spray or roller according to manufacturer's written instructions. Recoat areas subjected to heavy rainfall within three hours after initial application. Maintain continuity of coating and repair damage during curing period.

    a. Removal: After curing period has elapsed, remove curing compound without damaging concrete surfaces by method recommended by curing compound manufacturer unless manufacturer certifies curing compound will not interfere with bonding of floor covering used on Project.

4. Curing and Sealing Compound: Apply uniformly to floors and slabs indicated in a continuous operation by power spray or roller according to manufacturer's written instructions. Recoat areas subjected to heavy rainfall within three hours after initial

application. Repeat process 24 hours later and apply a second coat. Maintain continuity of coating and repair damage during curing period.

3.10 CONCRETE SURFACE REPAIRS

A. Defective Concrete: Repair and patch defective areas when approved by Architect. Remove and replace concrete that cannot be repaired and patched to Architect's approval.

3.11 FIELD QUALITY CONTROL

A. Testing Agency: Contractor shall engage a qualified independent testing and inspecting agency to sample materials, perform tests, and submit test reports during concrete placement to determine compliance with the contract specifications.

B. Testing Services: Testing of composite samples of fresh concrete obtained according to ASTM C 172 shall be performed according to the following requirements:

1. Testing Frequency: Obtain one composite sample for each day's pour of each concrete mix exceeding 5 cu. Yd. (4 cu. m), but less than 25 cu. Yd. (19 cu. m), plus one set for each additional 50 cu. yd. (38 cu. m) or fraction thereof.

2. Slump: ASTM C 143; one test at point of placement (Prior to pumping) for each composite sample, but not less than one test for each day's pour of each concrete mix. Perform additional tests when concrete consistency appears to change.

3. Air Content: ASTM C 231, pressure method, for normal-weight concrete; ASTM C 173, volumetric method, for structural lightweight concrete; one test for each composite sample, but not less than one test for each day's pour of each concrete mix.

4. Concrete Temperature: ASTM C 1064; one test hourly when air temperature is 40 deg F (4.4 deg C) and below and when 80 deg F (27 deg. C) and above, and one test for each composite sample.

5. Unit Weight: ASTM C 567, fresh unit weight of structural lightweight concrete; one test for each composite sample, but not less than one test for each day's pour of each concrete mix.

6. Compression Test Specimens: ASTM C 31/C 31M;

    a. Cast and laboratory cure one set of four standard cylinder specimens for each composite sample.
    b. Cast two extra cylinders per hour, to be held in reserve and laboratory cured as remainder of specimens from each composite.

7. Compressive-Strength Tests: ASTM C 39;

    a. Test two laboratory-cured specimens at 7, two at 14 days, and two at 28 days.
    b. A compressive-strength test shall be the average compressive strength

from two specimens obtained from same composite sample and tested at age indicated.

c. Only 7 and 14-day tests will be accepted for compression test verification. Fifty-six (56) day results will never be considered.

C. Strength of each concrete mix will be satisfactory if every average of any three consecutive compressive-strength tests equals or exceeds specified compressive strength and no compressive-strength test value falls below specified compressive strength by more than 500 psi (3.4 MPa).

D. Test results shall be reported in writing to Engineer, concrete manufacturer, and Contractor within 48 hours of testing. Reports of compressive-strength tests shall contain Project identification name and number, date of concrete placement, name of concrete testing and inspecting agency, location of concrete batch in Work, design compressive strength at 28 days, concrete mix proportions and materials, compressive breaking strength, and type of break for all tests.

E. Nondestructive Testing: Impact hammer, sonoscope, or other nondestructive device may be permitted by Engineer but will not be used as sole basis for approval or rejection of concrete.

F. Additional Tests: Testing and inspecting agency shall make additional tests of concrete when test results indicate that slump, air entrainment, compressive strengths, or other requirements have not been met, as directed by Engineer. Testing and inspecting agency may conduct tests to determine adequacy of concrete by cored cylinders complying with ASTM C 42 or by other methods as directed by Engineer. Contractor shall pay for cored cylinder collections and testing if standard cylinder specimens fail to confirm conformance with the specifications.

END OF SECTION

SECTION 05 40 00

COLD-FORMED METAL FRAMING

PART 1 - GENERAL

1.1 RELATED DOCUMENTS

A. Drawings and general provisions of the Contract, including General and Supplementary Conditions and Division 01 Specification Sections, apply to this Section.

1.2 SUMMARY

A. Section Includes:

1. Non-load bearing wall framing.
2. Soffit framing.

1.3 ACTION SUBMITTALS

A. Product Data: For each type of cold-formed steel framing product and accessory.

B. Shop Drawings:

1. Include layout, spacings, sizes, thicknesses for all cold formed steel framing, fabrication; and fastening and anchorage details, including mechanical fasteners.
2. Include design calculations for all cold formed steel framing.

1.4 INFORMATIONAL SUBMITTALS

A. Qualification Data: For testing agency.

B. Welding certificates.

C. Product Test Reports.

D. Research Reports.

1.5 QUALITY ASSURANCE

A. Testing Agency Qualifications: Qualified according to ASTM E 329 for testing indicated.

B. Product Tests: Mill certificates or data from a qualified independent testing agency indicating steel sheet complies with requirements, including base-metal thickness, yield strength, tensile strength, total elongation, chemical requirements, and metallic-coating thickness.

C. Welding Qualifications: Qualify procedures and personnel according to the following:

1. AWS D1.1/D1.1M, "Structural Welding Code - Steel."
2. AWS D1.3/D1.3M, "Structural Welding Code - Sheet Steel."

1.6 DELIVERY, STORAGE, AND HANDLING

A. Protect cold-formed steel framing from corrosion, moisture staining, deformation, and other damage during delivery, storage, and handling.

PART 2 - PRODUCTS

2.1 MANUFACTURERS

A. Manufacturers: Subject to compliance with requirements, available manufacturers offering products that may be incorporated into the Work include, but are not limited to, the following:

1. AllSteel & Gypsum Products, Inc.
2. California Expanded Metal Products Company.
3. ClarkWestern Building Systems, Inc.
4. Consolidated Fabricators Corp.; Building Products Division.
5. Craco Mfg., Inc.
6. Custom Stud Inc.
7. Design Shapes in Steel.
8. Dietrich Metal Framing; a Worthington Industries Company.
9. Formetal Co. Inc. (The).
10. MarinoWARE.
11. Nuconsteel; a Nucor Company.
12. Olmar Supply, Inc.
13. Quail Run Building Materials, Inc.
14. SCAFCO Corporation.
15. Southeastern Stud & Components, Inc.
16. State Building Products, Inc.
17. Steel Construction Systems.
18. Steel Network, Inc. (The).
19. Steel Structural Systems.
20. Steeler, Inc.
21. Super Stud Building Products, Inc.
22. Telling Industries, LLC.
23. United Metal Products, Inc.
24. United Steel Manufacturing.

2.2 PERFORMANCE REQUIREMENTS

A. Delegated Design: Engage a qualified professional engineer to design cold-formed steel framing.

B. Structural Performance: Provide cold-formed steel framing capable of withstanding design loads within limits and under conditions indicated.

1. Design Loads: As indicated.
2. Deflection Limits: Design framing systems to withstand without deflections greater than the following:

a. Exterior Wall Framing: Horizontal deflection of 1/360 of the wall height.

b. Exterior Wall Framing with masonry Veneer: Horizontal deflection of 1/600 of the wall height

3. Design framing systems to provide for movement of framing members located outside the insulated building envelope without damage or overstressing, sheathing failure, connection failure, undue strain on fasteners and anchors, or other detrimental effects when subject to a maximum ambient temperature change of 120 deg F (67 deg C).

4. Design framing system to maintain clearances at openings, to allow for construction tolerances, and to accommodate live load deflection of primary building structure as follows:

a. Upward and downward movement of 1/2 inch (13 mm).

C. Cold-Formed Steel Framing Design Standards:

1. Wall Studs: AISI S211.
2. Lateral Design: AISI S213.

D. AISI Specifications and Standards: Unless more stringent requirements are indicated, comply with AISI S100 and AISI S200.

E. Fire-Resistance Ratings: Comply with ASTM E 119; testing by a qualified testing agency. Identify products with appropriate markings from an applicable testing agency.

1. Indicate design designations from UL's "Fire Resistance Directory" or from the listings of another qualified testing agency.

2.3 COLD-FORMED STEEL FRAMING, GENERAL

A. Recycled Content of Steel Products: Postconsumer recycled content plus one-half of preconsumer recycled content not less than 25 percent.

B. Steel Sheet: ASTM A 1003/A 1003M, Structural Grade, Type H, metallic coated, of grade and coating weight as follows:

1. Grade: As required by structural performance.

2. Coating: G60 (Z180).

C. Steel Sheet for Drift Clips: ASTM A 653/A 653M, structural steel, zinc coated, of grade and coating as follows:

1. Grade: As required by structural performance.
2. Coating: G90 (Z275).

2.4 EXTERIOR NON-LOAD-BEARING WALL FRAMING

A. Steel Studs: Manufacturer's standard C-shaped steel studs, of web depths indicated, punched, with stiffened flanges, and as follows:

1. Minimum Base-Metal Thickness: 18 gage, 0.05”.

2. Flange Width:1-5/8 inches (41 mm)].

B. Steel Track: Manufacturer's standard U-shaped steel track, of web depths indicated, unpunched, with unstiffened flanges, and matching minimum base-metal thickness of steel studs.

C. Single Deflection Track: Manufacturer's single, deep-leg, U-shaped steel track; unpunched, with unstiffened flanges, of web depth to contain studs while allowing free vertical movement, with flanges designed to support horizontal loads and transfer them to the primary structure.

D. Double Deflection Tracks: Manufacturer's double, deep-leg, U-shaped steel tracks, consisting of nested inner and outer tracks; unpunched, with unstiffened flanges.

E. Drift Clips: Manufacturer's standard bypass or head clips, capable of isolating wall stud from upward and downward vertical displacement and lateral drift of primary structure through positive mechanical attachment to stud web and structure.

2.5 SOFFIT FRAMING

A. Exterior Soffit Frame: Manufacturer's standard C-shaped steel sections, of web depths indicated, with stiffened flanges, and as follows:

1. Minimum Base-Metal Thickness: As required by structural performance, or as indicated.

2. Flange Width: 1-5/8 inches (41 mm), minimum.

2.6 FRAMING ACCESSORIES

A. Fabricate steel-framing accessories from steel sheet, ASTM A 1003/A 1003M, Structural Grade, Type H, metallic coated, of same grade and coating weight used for framing members.

B. Provide accessories of manufacturer's standard thickness and configuration, unless otherwise indicated, as follows:

1. Supplementary framing.
2. Bracing, bridging, and solid blocking.
3. Web stiffeners.

4. Anchor clips.
5. End clips.
6. Foundation clips.
7. Gusset plates.
8. Stud kickers and knee braces.
9. Joist hangers and end closures.
10. Hole reinforcing plates.
11. Backer plates.

2.7 ANCHORS, CLIPS, AND FASTENERS

A. Steel Shapes and Clips: ASTM A 36/A 36M, zinc coated by hot-dip process according to ASTM A 123/A 123M.

B. Anchor Bolts: ASTM F 1554, Grade 36, threaded carbon-steel hex-headed bolts and carbon-steel nuts; and flat, hardened-steel washers; zinc coated by hot-dip process according to ASTM A 153/A 153M, Class C.

C. Expansion Anchors: Fabricated from corrosion-resistant materials, with allowable load or strength design capacities calculated according to ICC-ES AC193 and ACI 318 greater than or equal to the design load, as determined by testing per ASTM E 488 conducted by a qualified testing agency.

D. Power-Actuated Anchors: Fastener system of type suitable for application indicated, fabricated from corrosion-resistant materials, with allowable load capacities calculated according to ICC-ES AC70, greater than or equal to the design load, as determined by testing per ASTM E 1190 conducted by a qualified testing agency.

E. Mechanical Fasteners: ASTM C 1513, corrosion-resistant-coated, self-drilling, self-tapping, steel drill screws.

   1. Head Type: Manufacturer's standard deflection clip.

F. Welding Electrodes: Comply with AWS standards.

2.8 MISCELLANEOUS MATERIALS

A. Galvanizing Repair Paint: SSPC-Paint 20 or MIL-P-21035B.

B. Cement Grout: Portland cement, ASTM C 150, Type I; and clean, natural sand, ASTM C 404. Mix at ratio of 1 part cement to 2-1/2 parts sand, by volume, with minimum water required for placement and hydration.

C. Nonmetallic, Nonshrink Grout: Premixed, nonmetallic, noncorrosive, nonstaining grout containing selected silica sands, portland cement, shrinkage-compensating agents, and plasticizing and water-reducing agents, complying with ASTM C 1107/C 1107M, with fluid consistency and 30-minute working time.

D. Shims: Load bearing, high-density multimonomer plastic, and nonleaching; or of cold-formed steel of same grade and coating as framing members supported by shims.

E. Sealer Gaskets: Closed-cell neoprene foam, 1/4 inch (6.4 mm) thick, selected from manufacturer's standard widths to match width of bottom track or rim track members.

2.9 FABRICATION

A. Fabricate cold-formed steel framing and accessories plumb, square, and true to line, and with connections securely fastened, according to referenced AISI's specifications and standards, manufacturer's written instructions, and requirements in this Section.

1. Fabricate framing assemblies using jigs or templates.
2. Cut framing members by sawing or shearing; do not torch cut.
3. Fasten cold-formed steel framing members by welding, screw fastening, clinch fastening, pneumatic pin fastening, or riveting as standard with fabricator. Wire tying of framing members is not permitted.

    a. Comply with AWS D1.3/D1.3M requirements and procedures for welding, appearance and quality of welds, and methods used in correcting welding work.
    b. Locate mechanical fasteners and install according to Shop Drawings, with screw penetrating joined members by no fewer than three exposed screw threads.

4. Fasten other materials to cold-formed steel framing by welding, bolting, pneumatic pin fastening, or screw fastening, according to Shop Drawings.

B. Reinforce, stiffen, and brace framing assemblies to withstand handling, delivery, and erection stresses. Lift fabricated assemblies to prevent damage or permanent distortion.

C. Fabrication Tolerances: Fabricate assemblies level, plumb, and true to line to a maximum allowable tolerance variation of 1/8 inch in 10 feet (1:960) and as follows:

1. Spacing: Space individual framing members no more than plus or minus 1/8 inch (3 mm) from plan location. Cumulative error shall not exceed minimum fastening requirements of sheathing or other finishing materials.
2. Squareness: Fabricate each cold-formed steel framing assembly to a maximum out-of-square tolerance of 1/8 inch (3 mm).

PART 3 - EXECUTION

3.1 EXAMINATION

A. Examine supporting substrates and abutting structural framing for compliance with requirements for installation tolerances and other conditions affecting performance of the Work.

B. Proceed with installation only after unsatisfactory conditions have been corrected.

3.2 PREPARATION

A. Before sprayed fire-resistive materials are applied, attach continuous angles, supplementary framing, or tracks to structural members indicated to receive sprayed fire-resistive materials.

B. After applying sprayed fire-resistive materials, remove only as much of these materials as needed to complete installation of cold-formed framing without reducing thickness of fire-resistive materials below that are required to obtain fire-resistance rating indicated. Protect remaining fire-resistive materials from damage.

C. Install load bearing shims or grout between the underside of load-bearing wall bottom track and the top of foundation wall or slab at locations with a gap larger than 1/4 inch (6 mm) to ensure a uniform bearing surface on supporting concrete or masonry construction.

D. Install sealer gaskets at the underside of wall bottom track or rim track and at the top of foundation wall or slab at stud or joist locations.

3.3 INSTALLATION, GENERAL

A. Cold-formed steel framing may be shop or field fabricated for installation, or it may be field assembled.

B. Install cold-formed steel framing according to AISI S200 and to manufacturer's written instructions unless more stringent requirements are indicated.

C. Install shop- or field-fabricated, cold-formed framing and securely anchor to supporting structure.

1. Screw, bolt, or weld wall panels at horizontal and vertical junctures to produce flush, even, true-to-line joints with maximum variation in plane and true position between fabricated panels not exceeding 1/16 inch (1.6 mm).

D. Install cold-formed steel framing and accessories plumb, square, and true to line, and with connections securely fastened.

1. Cut framing members by sawing or shearing; do not torch cut.
2. Fasten cold-formed steel framing members by welding, screw fastening, clinch fastening, or riveting. Wire tying of framing members is not permitted.

   a. Comply with AWS D1.3/D1.3M requirements and procedures for welding, appearance and quality of welds, and methods used in correcting welding work.
   b. Locate mechanical fasteners and install according to Shop Drawings, and complying with requirements for spacing, edge distances, and screw penetration.

E. Install framing members in one-piece lengths unless splice connections are indicated for track or tension members.

F. Install temporary bracing and supports to secure framing and support loads comparable in intensity to those for which structure was designed. Maintain braces and supports in place,

undisturbed, until entire integrated supporting structure has been completed and permanent connections to framing are secured.

G. Do not bridge building expansion joints with cold-formed steel framing. Independently frame both sides of joints.

H. Install insulation in built-up exterior framing members, such as headers, sills, boxed joists, and multiple studs at openings, that are inaccessible on completion of framing work.

I. Fasten hole reinforcing plate over web penetrations that exceed size of manufacturer's approved or standard punched openings.

J. Erection Tolerances: Install cold-formed steel framing level, plumb, and true to line to a maximum allowable tolerance variation of 1/8 inch in 10 feet (1:960) and as follows:

1. Space individual framing members no more than plus or minus 1/8 inch (3 mm) from plan location. Cumulative error shall not exceed minimum fastening requirements of sheathing or other finishing materials.

3.4 EXTERIOR NON-LOAD-BEARING WALL INSTALLATION

A. Install continuous tracks sized to match studs. Align tracks accurately and securely anchor to supporting structure as indicated.

B. Fasten both flanges of studs to top and bottom track unless otherwise indicated. Space studs as follows:
1. Stud Spacing: 16 inches (406 mm).

C. Set studs plumb, except as needed for diagonal bracing or required for non-plumb walls or warped surfaces and similar requirements.

D. Isolate non-load-bearing steel framing from building structure to prevent transfer of vertical loads while providing lateral support.

1. Install single deep-leg deflection tracks and anchor to the building structure.
2. Install double deep-leg deflection tracks and anchor outer track to building structure.
3. Connect vertical deflection clips to infill studs and anchor to building structure.
4. Connect drift clips to cold-formed metal framing and anchor to building structure.

E. Install horizontal bridging in wall studs, spaced vertically in rows indicated on Shop Drawings but not more than 48 inches (1220 mm) apart. Fasten at each stud intersection.

1. Top Bridging for Single Deflection Track: Install row of horizontal bridging within 12 inches (305 mm) of single deflection track. Install a combination of bridging and stud or stud-track solid blocking of width and thickness matching studs, secured to stud webs or flanges.
   a. Install solid blocking at centers indicated on Shop Drawings.

2. Bridging: Cold-rolled steel channel welded or mechanically fastened to webs of punched studs.
3. Bridging: Combination of flat, taut, steel sheet straps of width and thickness indicated and stud-track solid blocking of width and thickness to match studs. Fasten flat straps to stud flanges and secure solid blocking to stud webs or flanges.
4. Bridging: Proprietary bridging bars installed according to manufacturer's written instructions.

F. Install miscellaneous framing and connections, including stud kickers, web stiffeners, clip angles, continuous angles, anchors, and fasteners, to provide a complete and stable wall-framing system.

3.1 FIELD QUALITY CONTROL

A. Testing: Owner will engage a qualified independent testing and inspecting agency to perform field tests and inspections and prepare test reports.

B. Field and shop welds will be subject to testing and inspecting.

C. Testing agency will report test results promptly and in writing to Contractor and Architect.

D. Remove and replace work where test results indicate that it does not comply with specified requirements.

E. Additional testing and inspecting, at Contractor's expense, will be performed to determine compliance of replaced or additional work with specified requirements.

3.2 REPAIRS AND PROTECTION

A. Galvanizing Repairs: Prepare and repair damaged galvanized coatings on fabricated and installed cold-formed steel framing with galvanized repair paint according to ASTM A 780 and manufacturer's written instructions.

B. Provide final protection and maintain conditions, in a manner acceptable to manufacturer and Installer, that ensure that cold-formed steel framing is without damage or deterioration at time of Substantial Completion.

3.5 REPAIRS AND PROTECTION

A. Galvanizing Repairs: Prepare and repair damaged galvanized coatings on fabricated and installed cold-formed steel framing with galvanized repair paint according to ASTM A 780 and manufacturer's written instructions.

B. Provide final protection and maintain conditions, in a manner acceptable to manufacturer and Installer, that ensure that cold-formed steel framing is without damage or deterioration at time of Substantial Completion.

END OF SECTION

SECTION 05 51 13

METAL PAN STAIRS

PART 1 - GENERAL

1.1 SUMMARY

A. Section Includes:

1. Preassembled steel stairs with concrete-filled treads.
2. Steel tube handrails attached to walls adjacent to metal stairs.

1.2 ACTION SUBMITTALS

A. Shop Drawings: Include plans, elevations, sections, details, and attachments to other work.

PART 2 - PRODUCTS

2.1 PERFORMANCE REQUIREMENTS

A. Structural Performance of Stairs: Metal stairs shall withstand the effects of gravity loads and the following loads and stresses within limits and under conditions indicated:

1. Uniform Load: 100 lbf/sq. ft. (4.79 kN/sq. m).
2. Concentrated Load: 300 lbf (1.33 kN) applied on an area of 4 sq. in. (2580 sq. mm).
3. Uniform and concentrated loads need not be assumed to act concurrently.

B. Structural Performance of Railings: Railings shall withstand the effects of gravity loads and the following loads and stresses within limits and under conditions indicated:

1. Handrails and Top Rails of Guards:

   a. Uniform load of 50 lbf/ft. (0.73 kN/m) applied in any direction.
   b. Concentrated load of 200 lbf (0.89 kN) applied in any direction.
   c. Uniform and concentrated loads need not be assumed to act concurrently.

2. Infill of Guards:

   a. Concentrated load of 50 lbf (0.22 kN) applied horizontally on an area of 1 sq. ft. (0.093 sq. m).
   b. Infill load and other loads need not be assumed to act concurrently.

2.2 METALS

A. Metal Surfaces, General: Provide materials with smooth, flat surfaces unless otherwise indicated. For components exposed to view in the completed Work, provide materials without seam marks, roller marks, rolled trade names, or blemishes.

B. Steel Plates, Shapes, and Bars: ASTM A 36/A 36M.

C. Steel Tubing: ASTM A 513.

D. Uncoated, Cold-Rolled Steel Sheet: ASTM A 1008/A 1008M, structural steel, Grade 25 (Grade 170), unless another grade is required by design loads; exposed.

E. Uncoated, Hot-Rolled Steel Sheet: ASTM A 1011/A 1011M, structural steel, Grade 30 (Grade 205), unless another grade is required by design loads.

F. Aluminum Extrusions: ASTM B 221 (ASTM B 221M), Alloy 6063-T6.

2.3 ABRASIVE NOSINGS

A. Cast-Metal Units: Cast iron, with an integral abrasive, as-cast finish.

B. Provide anchors for embedding units in concrete, either integral or applied to units, as standard with manufacturer.

C. Apply bituminous paint to concealed surfaces of cast-metal units set into concrete.

D. Apply clear lacquer to concealed surfaces of extruded units set into concrete.

2.4 FASTENERS

A. Provide zinc-plated fasteners with coating complying with ASTM B 633 or ASTM F 1941 (ASTM F 1941M), Class Fe/Zn 12 for exterior use, and Class Fe/Zn 5 where built into exterior walls. Select fasteners for type, grade, and class required.

2.5 MISCELLANEOUS MATERIALS

A. Universal Shop Primer: Fast-curing, lead- and chromate-free, universal modified-alkyd primer complying with MPI#79 and compatible with topcoat.

B. Bituminous Paint: Cold-applied asphalt emulsion complying with ASTM D 1187/D 1187M.

C. Concrete Materials and Properties: Comply with requirements in Section 033000 "Cast-in-Place Concrete" for normal-weight, air-entrained, ready-mix concrete with a minimum 28-day compressive strength of 3000 psi (20 MPa) unless otherwise indicated.

D. Welded Wire Reinforcement: ASTM A 185/A 185M, 6 by 6 inches (152 by 152 mm), W1.4 by W1.4, unless otherwise indicated.

2.6 FABRICATION, GENERAL

A. Provide complete stair assemblies, including metal framing, hangers, struts,[railings,] clips, brackets, bearing plates, and other components necessary to support and anchor stairs and platforms on supporting structure.

1. Join components by welding unless otherwise indicated.
2. Use connections that maintain structural value of joined pieces.

B. Preassembled Stairs: Assemble stairs in shop to greatest extent possible. Disassemble units only as necessary for shipping and handling limitations. Clearly mark units for reassembly and coordinated installation.

C. Cut, drill, and punch metals cleanly and accurately. Remove burrs and ease edges to a radius of approximately 1/32 inch (1 mm) unless otherwise indicated. Remove sharp or rough areas on exposed surfaces.

D. Form bent-metal corners to smallest radius possible without causing grain separation or otherwise impairing work.

E. Weld connections to comply with the following:

1. Use materials and methods that minimize distortion and develop strength and corrosion resistance of base metals.
2. Obtain fusion without undercut or overlap.
3. Remove welding flux immediately.

4. Weld exposed corners and seams continuously unless otherwise indicated.

F. Form exposed connections with hairline joints, flush and smooth, using concealed fasteners where possible. Locate joints where least conspicuous.

2.7 STEEL-FRAMED STAIRS

A. NAAMM Stair Standard: Comply with "Recommended Voluntary Minimum Standards for Fixed Metal Stairs" in NAAMM AMP 510, "Metal Stairs Manual," Service Class, unless more stringent requirements are indicated.

B. Stair Framing:

1. Fabricate stringers of steel channels.

a. Provide closures for exposed ends of channel stringers.

2. Weld or bolt stringers to headers; weld or bolt framing members to stringers and headers.
3. Where masonry walls support metal stairs, provide temporary supporting struts designed for erecting steel stair components before installing masonry.

C. Metal Pan Stairs: Form risers, subtread pans, and subplatforms to configurations shown from steel sheet of thickness indicated.

D. Abrasive-Coating-Finished, Formed-Metal Stairs: Form risers, treads, and platforms to configurations shown from steel sheet of thickness needed to comply with performance requirements, but not less than 0.097 inch (2.5 mm).

2.8 STAIR RAILINGS

A. Steel Tube Railings: Fabricate railings to comply with requirements indicated for design, dimensions, details, finish, and member sizes, including wall thickness of tube, post spacings, and anchorage, but not less than that needed to withstand indicated loads.

1. Rails and Posts: 1-1/2-inch- (38-mm-) square top and bottom rails and 1-1/2-inch- (38-mm-) square posts.

2. Picket Infill: 1/2-inch- (13-mm-) square pickets spaced less than 4 inches (100 mm) clear.

B. Welded Connections: Fabricate railings with welded connections. Cope components at connections to provide close fit, or use fittings designed for this purpose. Weld all around at connections, including at fittings.

1. Finish welds to comply with NOMMA's "Voluntary Joint Finish Standards" for Type 3 welds: partially dressed weld with spatter removed as shown in NAAMM AMP 521.

C. Form changes in direction of railings by bending or by inserting prefabricated elbow fittings.

D. For changes in direction made by bending, use jigs to produce uniform curvature for each repetitive configuration required. Maintain cross section of member throughout entire bend without buckling, twisting, cracking, or otherwise deforming exposed surfaces of components.

E. Close exposed ends of railing members with prefabricated end fittings.

F. Provide wall returns at ends of wall-mounted handrails.

G. Connect posts to stair framing by direct welding.

H. Brackets, Flanges, Fittings, and Anchors: Provide wall brackets, end closures, flanges, miscellaneous fittings, and anchors for interconnecting components and for attaching to other work.

I. Fillers: Provide fillers made from steel plate, or other suitably crush-resistant material, where needed to transfer wall bracket loads through wall finishes to structural supports. Size fillers to suit wall finish thicknesses.

2.9 FINISHES

A. Finish metal stairs after assembly.

B. Preparation for Shop Priming: Prepare uncoated ferrous-metal surfaces to comply with SSPC-SP 3, "Power Tool Cleaning."

C. Apply shop primer to uncoated surfaces of metal stair components, except those with galvanized finishes and those to be embedded in concrete or masonry unless otherwise indicated. Comply with SSPC-PA 1, "Paint Application Specification No. 1: Shop, Field, and Maintenance Painting of Steel," for shop painting.

PART 3 - EXECUTION

3.1 INSTALLING METAL PAN STAIRS

A. Cutting, Fitting, and Placement: Perform cutting, drilling, and fitting required for installing metal stairs. Set units accurately in location, alignment, and elevation, measured from established lines and levels and free of rack.

B. Install metal stairs by welding stair framing to steel structure or to weld plates cast into concrete unless otherwise indicated.

C. Fit exposed connections accurately together to form hairline joints. Weld connections that are not to be left as exposed joints.

D. Field Welding: Comply with requirements for welding in "Fabrication, General" Article.

E. Place and finish concrete fill for treads and platforms to comply with Section 033000 "Cast-in-Place Concrete."

1. Install abrasive nosings with anchors fully embedded in concrete.

F. Install precast concrete treads with adhesive supplied by manufacturer.

3.2 INSTALLING RAILINGS

A. Adjust railing systems before anchoring to ensure matching alignment at abutting joints. Space posts at spacing indicated or, if not indicated, as required by design loads. Plumb posts in each direction. Secure posts and rail ends to building construction as follows:

1. Anchor handrail ends to concrete and masonry with steel round flanges welded to rail ends and anchored with postinstalled anchors and bolts.

B. Attach handrails to wall with wall brackets. Locate brackets as indicated or, if not indicated, at spacing required to support structural loads. Secure wall brackets to building construction as required to comply with performance requirements.

3.3 ADJUSTING AND CLEANING

A. Touchup Painting: Immediately after erection, clean field welds, bolted connections, and abraded areas of shop paint, and paint exposed areas with same material as used for shop painting to comply with SSPC-PA 1 for touching up shop-painted surfaces.

END OF SECTION

SECTION 05 52 10

HANDRAILS AND RAILINGS

PART 1 - GENERAL

1.1 RELATED DOCUMENTS

A. Drawings and general provisions of the Contract, including General and Supplementary Conditions and Division 01 Specification Sections, apply to this Section.

1.2 SUMMARY

A. This Section includes the following:

1. Aluminum handrails and railings.

1.3 PERFORMANCE REQUIREMENTS

A. General: In engineering handrails and railings to withstand structural loads indicated, determine allowable design working stresses of handrail and railing materials based on the following:

1. Aluminum: AA 30, "Specifications for Aluminum Structures."

B. Structural Performance of Handrails and Railings: Provide handrails and railings complying with requirements of ASTM E 985 for structural performance, based on testing performed according to ASTM E 894 and ASTM E 935.

C. Thermal Movements: Provide handrails and railings that allow for thermal movements resulting from the following maximum change (range) in ambient and surface temperatures by preventing buckling, opening of joints, overstressing of components, failure of connections, and other detrimental effects. Base engineering calculation on surface temperatures of materials due to both solar heat gain and nighttime-sky heat loss.

1. Temperature Change (Range): 120 deg F (67 deg C), ambient; 180 deg F (100 deg C), material surfaces.

D. Control of Corrosion: Prevent galvanic action and other forms of corrosion by insulating metals and other materials from direct contact with incompatible materials.

1.4 SUBMITTALS

A. Product Data: For the following:

1. Manufacturer's product lines of mechanically connected handrails and railings.

2. Grout, anchoring cement, and paint products.

B. Shop Drawings: Show fabrication and installation of handrails and railings. Include plans, elevations, sections, component details, and attachments to other Work.

1. For installed handrails and railings indicated to comply with design loads, include structural analysis data signed and sealed by the qualified professional engineer responsible for their preparation.

C. Samples for Initial Selection: Manufacturer's color charts showing the full range of colors available for products with factory-applied color finishes.

D. Product Test Reports: From a qualified testing agency indicating handrails and railings comply with ASTM E 985, based on comprehensive testing of current products.

1.5 QUALITY ASSURANCE

A. Source Limitations: Obtain each type of handrail and railing through one source from a single manufacturer.

1.6 STORAGE

A. Store handrails and railings in a dry, well-ventilated, weathertight place.

1.7 PROJECT CONDITIONS

A. Field Measurements: Verify handrail and railing dimensions by field measurements before fabrication and indicate measurements on Shop Drawings. Coordinate fabrication schedule with construction progress to avoid delaying the Work.

1. Established Dimensions: Where field measurements cannot be made without delaying the Work, establish dimensions and proceed with fabricating handrails and railings without field measurements. Coordinate construction to ensure that actual dimensions correspond to established dimensions.

1.8 COORDINATION

A. Coordinate installation of anchorages for handrails and railings. Furnish setting drawings, templates, and directions for installing anchorages, including sleeves, concrete inserts, anchor bolts, and items with integral anchors, that are to be embedded in concrete or masonry. Deliver such items to Project site in time for installation.

1.9 SCHEDULING

A. Schedule installation so handrails and railings are mounted only on completed work. Do not support temporarily by any means that does not satisfy structural performance requirements.

PART 2 - PRODUCTS

2.1 MANUFACTURERS

A. Manufacturers: Subject to compliance with requirements, provide products by the following or approved equal:

1. Aluminum Pipe and Tube Railings:

a. Superior Aluminum Products, Inc., Series 500.
b. AGR, Inc.
c. American Railing Systems Inc.

2.2 METALS

A. General: Provide metal free from pitting, seam marks, roller marks, stains, discolorations, and other imperfections where exposed to view on finished units.

B. Aluminum: Alloy and temper recommended by aluminum producer and finisher for type of use and finish indicated, and with not less than the strength and durability properties of alloy and temper designated below for each aluminum form required.

1. Extruded Bar and Tube: ASTM B 221 (ASTM B 221M), alloy 6063-T5/T52.
2. Extruded Structural Pipe and Tube: ASTM B 429, alloy 6063-T6.
3. Drawn Seamless Tube: ASTM B 210 (ASTM B 210M), alloy 6063-T832.
4. Plate and Sheet: ASTM B 209 (ASTM B 209M), alloy 6061-T6.
5. Die and Hand Forgings: ASTM B 247 (ASTM B 247M), alloy 6061-T6.
6. Castings: ASTM B 26/B 26M, alloy A356-T6.

C. Brackets, Flanges, and Anchors: Cast or formed metal of same type of material and finish as supported rails, unless otherwise indicated.

2.3 WELDING MATERIALS, FASTENERS, AND ANCHORS

A. Welding Electrodes and Filler Metal: Provide type and alloy of filler metal and electrodes as recommended by producer of metal to be welded and as required for color match, strength, and compatibility in fabricated items.

B. Fasteners for Anchoring Handrails and Railings to Other Construction: Select fasteners of type, grade, and class required to produce connections suitable for anchoring handrails and railings to other types of construction indicated and capable of withstanding design loads.

1. For aluminum handrails and railings, use fasteners fabricated from Type 304 or Type 316 stainless steel.

C. Fasteners for Interconnecting Handrail and Railing Components: Use fasteners fabricated from same basic metal as fastened metal, unless otherwise indicated. Do not use metals that are corrosive or incompatible with materials joined.

1. Provide concealed fasteners for interconnecting handrail and railing components and for attaching them to other work, unless otherwise indicated.

D. Cast-in-Place and Postinstalled Anchors: Anchors of type indicated below, fabricated from corrosion-resistant materials with capability to sustain, without failure, a load equal to six times the load imposed when installed in unit masonry and equal to four times the load imposed when installed in concrete, as determined by testing per ASTM E 488 conducted by a qualified independent testing agency.

1. Cast-in-place anchors.
2. Expansion anchors.

2.4 PAINT

A. Shop Primers: Provide primers to comply with applicable requirements in Division 9 Section "Paints and Coatings."

B. Bituminous Paint: Cold-applied asphalt mastic complying with SSPC-Paint 12, except containing no asbestos fibers, or cold-applied asphalt emulsion complying with ASTM D 1187.

2.5 GROUT AND ANCHORING CEMENT

A. Nonshrink, Nonmetallic Grout: Premixed, factory-packaged, nonstaining, noncorrosive, nongaseous grout complying with ASTM C 1107. Provide grout specifically recommended by manufacturer for interior and exterior applications.

B. Erosion-Resistant Anchoring Cement: Factory-packaged, nonshrink, nonstaining, hydraulic-controlled expansion cement formulation for mixing with water at Project site to create pourable anchoring, patching, and grouting compound. Provide formulation that is resistant to erosion from water exposure without needing protection by a sealer or waterproof coating and that is recommended by manufacturer for exterior use.

2.6 FABRICATION

A. General: Fabricate handrails and railings to comply with requirements indicated for design, dimensions, member sizes and spacing, details, finish, and anchorage, but not less than that required to support structural loads.

B. Assemble handrails and railings in the shop to greatest extent possible to minimize field splicing and assembly. Disassemble units only as necessary for shipping and handling limitations. Clearly mark units for reassembly and coordinated installation. Use connections that maintain structural value of joined pieces.

C. Form simple and compound curves by bending members in jigs to produce uniform curvature for each repetitive configuration required; maintain cylindrical cross section of member throughout entire bend without buckling, twisting, cracking, or otherwise deforming exposed surfaces of handrail and railing components.

D. Nonwelded Connections: Fabricate handrails and railings by connecting members with concealed mechanical fasteners and fittings, unless otherwise indicated. Fabricate members and fittings to produce flush, smooth, rigid, hairline joints.

1. Fabricate splice joints for field connection using an epoxy structural adhesive where this is manufacturer's standard splicing method.

E. Welded Connections for Aluminum Pipe: Fabricate pipe handrails and railings to interconnect members with concealed internal welds that eliminate surface grinding, using manufacturer's standard system of sleeve and socket fittings.

F. Brackets, Flanges, Fittings, and Anchors: Provide wall brackets, flanges, miscellaneous fittings, and anchors to interconnect handrail and railing members to other work, unless otherwise indicated.

G. Provide inserts and other anchorage devices for connecting handrails and railings to concrete or masonry work. Fabricate anchorage devices capable of withstanding loads imposed by handrails and railings. Coordinate anchorage devices with supporting structure.

H. For railing posts set in concrete, provide preset sleeves of steel not less than 6 inches (150 mm) long with inside dimensions not less than 1/2 inch (12 mm) greater than outside dimensions of post, and steel plate forming bottom closure.

I. Shear and punch metals cleanly and accurately. Remove burrs from exposed cut edges.

J. Ease exposed edges to a radius of approximately 1/32 inch (1 mm), unless otherwise indicated. Form bent-metal corners to smallest radius possible without causing grain separation or otherwise impairing the Work.

K. Cut, reinforce, drill, and tap components, as indicated, to receive finish hardware, screws, and similar items.

L. Provide weep holes or another means to drain entrapped water in hollow sections of handrail and railing members that are exposed to exterior or to moisture from condensation or other sources.

M. Fabricate joints that will be exposed to weather in a watertight manner.

N. Close exposed ends of handrail and railing members with prefabricated end fittings.

O. Provide wall returns at ends of wall-mounted handrails, unless otherwise indicated. Close ends of returns, unless clearance between end of railing and wall is 1/4 inch (6 mm) or less.

P. Toe Boards: Where indicated, provide toe boards at railings around openings and at edge of open-sided floors and platforms. Fabricate to dimensions and details indicated.

Q. Fillers: Provide fillers made from steel plate, or other suitably crush-resistant material, where needed to transfer wall bracket loads through wall finishes to structural supports.

Size fillers to suit wall finish thicknesses and to produce adequate bearing area to prevent bracket rotation and overstressing of substrate.

2.7 FINISHES, GENERAL

A. Comply with NAAMM's "Metal Finishes Manual for Architectural and Metal Products" for recommendations for applying and designating finishes.

B. Protect mechanical finishes on exposed surfaces from damage by applying a strippable, temporary protective covering before shipping.

C. Appearance of Finished Work: Variations in appearance of abutting or adjacent pieces are acceptable if they are within one-half of the range of approved Samples. Noticeable variations in the same piece are not acceptable. Variations in appearance of other components are acceptable if they are within the range of approved Samples and are assembled or installed to minimize contrast.

D. Provide exposed fasteners with finish matching appearance, including color and texture, of handrails and railings.

2.8 ALUMINUM FINISHES

A. Finish designations prefixed by AA comply with system established by the Aluminum Association for designating aluminum finishes.

B. Class I, Color Anodic Finish: AA-M12C22A42/A44 (Mechanical Finish: nonspecular as fabricated; Chemical Finish: etched, medium matte; Anodic Coating: Architectural Class I, integrally colored or electrolytically deposited color coating 0.018 mm or thicker) complying with AAMA 606.1 or AAMA 608.1.

1. Color: As selected by Owner from the full range of industry colors and color densities.

PART 3 - EXECUTION

3.1 INSTALLATION, GENERAL

A. Fit exposed connections together to form tight, hairline joints.

B. Perform cutting, drilling, and fitting required to install handrails and railings. Set handrails and railings accurately in location, alignment, and elevation; measured from established lines and levels and free from rack.

1. Do not weld, cut, or abrade surfaces of handrail and railing components that have been coated or finished after fabrication and that are intended for field connection by mechanical or other means without further cutting or fitting.
2. Set posts plumb within a tolerance of 1/16 inch in 3 feet (2 mm in 1 m).

3. Align rails so variations from level for horizontal members and from parallel with rake of steps and ramps for sloping members do not exceed 1/4 inch in 12 feet (5 mm in 3 m).

C. Corrosion Protection: Coat concealed surfaces of aluminum that will be in contact with grout, concrete, masonry, wood, or dissimilar metals with a heavy coat of bituminous paint.

D. Adjust handrails and railings before anchoring to ensure matching alignment at abutting joints. Space posts at interval indicated, but not less than that required by structural loads.

E. Fastening to In-Place Construction: Use anchorage devices and fasteners where necessary for securing handrails and railings and for properly transferring loads to in-place construction.

3.2 RAILING CONNECTIONS

A. Nonwelded Connections: Use mechanical or adhesive joints for permanently connecting railing components. Use wood blocks and padding to prevent damage to railing members and fittings. Seal recessed holes of exposed locking screws using plastic cement filler colored to match finish of handrails and railings.

B. Welded Connections: Use fully welded joints for permanently connecting railing components. Comply with requirements for welded connections in "Fabrication" Article whether welding is performed in the shop or in the field.

C. Expansion Joints: Install expansion joints at locations indicated but not farther apart than required to accommodate thermal movement. Provide slip-joint internal sleeve extending 2 inches (50 mm) beyond joint on either side, fasten internal sleeve securely to one side, and locate joint within 6 inches (150 mm) of post.

3.3 ANCHORING POSTS

A. Use steel pipe sleeves preset and anchored into concrete for installing posts. After posts have been inserted into sleeves, fill annular space between post and sleeve with the following anchoring material, mixed and placed to comply with anchoring material manufacturer's written instructions:

B. Form or core-drill holes not less than 5 inches (125 mm) deep and 3/4 inch (20 mm) larger than OD of post for installing posts in concrete. Clean holes of loose material, insert posts, and fill annular space between post and concrete with the following anchoring material, mixed and placed to comply with anchoring material manufacturer's written instructions:

1. Nonshrink, nonmetallic grout.

C. Cover anchorage joint with flange of same metal as post, attached to post as follows:

1. By set screws.

D. Anchor posts to metal surfaces with oval flanges, angle type, or floor type as required by conditions, connected to posts and to metal supporting members as follows:

1. For aluminum pipe railings, attach posts as indicated using fittings designed and engineered for this purpose.

3.4 ANCHORING RAILING ENDS

A. Anchor railing ends into concrete and masonry with round flanges connected to railing ends and anchored into wall construction with post-installed anchors and bolts.

B. Anchor railing ends to metal surfaces with flanges bolted to metal surfaces.

1. Weld flanges to railing ends.

2. Connect flanges to railing ends using nonwelded connections.

3.5 ATTACHING HANDRAILS TO WALLS

A. Attach handrails to wall with wall brackets. Provide bracket with 1-1/2-inch (38-mm) clearance from inside face of handrail and finished wall surface.

B. Locate brackets as indicated or, if not indicated, at spacing required to support structural loads.

C. Secure wall brackets to building construction as follows:

1. For concrete and solid masonry anchorage, use drilled-in expansion shields and hanger or lag bolts.
2. For hollow masonry anchorage, use toggle bolts.

3.6 CLEANING

A. Clean aluminum and stainless steel by washing thoroughly with clean water and soap and rinsing with clean water.

B. Touchup Painting: Immediately after erection, clean field welds, bolted connections, and abraded areas of shop paint, and paint exposed areas with same material.

3.7 PROTECTION

A. Protect finishes of handrails and railings from damage during construction period with temporary protective coverings approved by railing manufacturer. Remove protective coverings at the time of Substantial Completion.

B. Restore finishes damaged during installation and construction period so no evidence remains of correction work. Return items that cannot be refinished in the field to the shop; make required alterations and refinish entire unit or provide new units.

END OF SECTION

This page intentionally left blank.

SECTION 06 10 00

ROUGH CARPENTRY

PART 1 GENERAL

1.01 SECTION INCLUDES

A. Rough opening framing for doors and windows

B. Concealed wood blocking, nailers, and supports.

1.02 REFERENCE STANDARDS

A. ASTM A153/A153M - Standard Specification for Zinc Coating (Hot-Dip) on Iron and Steel Hardware 2016a.

B. PS 20 - American Softwood Lumber Standard 2020.

1.03 DELIVERY, STORAGE, AND HANDLING

A. General: Cover wood products to protect against moisture. Support stacked products to prevent deformation and to allow air circulation.

PART 2 PRODUCTS

2.01 GENERAL REQUIREMENTS

A. Dimension Lumber: Comply with PS 20 and requirements of specified grading agencies.
   1. Species: Southern Pine, unless otherwise indicated.
   2. If no species is specified, provide species graded by the agency specified; if no grading agency is specified, provide lumber graded by grading agency meeting the specified requirements.
   3. Grading Agency: Grading agency whose rules are approved by the Board of Review, American Lumber Standard Committee at www.alsc.org, and who provides grading service for the species and grade specified; provide lumber stamped with grade mark unless otherwise indicated.

2.02 DIMENSION LUMBER FOR CONCEALED APPLICATIONS

A. Sizes: Nominal sizes 2x, .

B. Moisture Content: S-dry or MC19.

C. Miscellaneous Framing, Blocking, Nailers, Grounds, and Furring:
   1. Lumber: S4S, No. 2 or Standard Grade.
   2. Boards: Standard or No. 3.

2.03 ACCESSORIES

A. Fasteners and Anchors:
   1. Metal and Finish: Hot-dipped galvanized steel complying with ASTM A153/A153M for high humidity and preservative-treated wood locations, unfinished steel elsewhere.

PART 3 EXECUTION

3.01 INSTALLATION - GENERAL

A. Select material sizes to minimize waste.

B. Reuse scrap to the greatest extent possible; clearly separate scrap for use on site as accessory components, including: shims, bracing, and blocking.

3.02 BLOCKING, NAILERS, AND SUPPORTS

A. Provide framing and blocking members as indicated or as required to support finishes, fixtures, specialty items, and trim.

B. In framed assemblies that have concealed spaces, provide solid wood fireblocking as required by applicable local code, to close concealed draft openings between floors and between top story and roof/attic space; other material acceptable to authorities having jurisdiction may be used in lieu of solid wood blocking.

C. In metal stud walls, provide continuous blocking around door and window openings for anchorage of frames, securely attached to stud framing.

D. In walls, provide blocking attached to studs as backing and support for wall-mounted items, unless item can be securely fastened to two or more studs or other method of support is explicitly indicated.

E. Where ceiling-mounting is indicated, provide blocking and supplementary supports above ceiling, unless other method of support is explicitly indicated.

F. Provide the following specific nonstructural framing and blocking:
   1. Cabinets and shelf supports.
   2. Grab bars.
   3. Towel and bath accessories.
   4. Wall-mounted door stops.

END OF SECTION

SECTION 07 62 00

SHEET METAL FLASHING AND TRIM

PART 1 - GENERAL

1.1 RELATED DOCUMENTS

A. Drawings and general provisions of the Contract, including General and Supplementary Conditions and Division 01 Specification Sections, apply to this Section.

1.2 SUMMARY

A. This Section includes sheet metal flashing and trim in the following categories:

1. Roof systems
2. Metal flashing

B. Related Sections. The following Sections contain requirements that relate to this Section:

1. Division 07 Roofing Sections for flashing and roofing accessories installed integral with roofing membrane as part of roofing-system work.

1.3 PERFORMANCE REQUIREMENTS

A. General: Install sheet metal flashing and trim to withstand 120 mph wind loads, structural movement, thermally induced movement, and exposure to weather without failing.

1.4 SUBMITTALS

A. General: Submit each item in this Article according to the Conditions of the Contract and Division 1 Specification Sections.

B. Product Data including manufacturer's material and finish data, installation instructions, and general recommendations for each specified flashing material and fabricated product.

1.5 QUALITY ASSURANCE

A. Installer Qualifications: Engage an experience Installer who has completed sheet metal flashing and trim work similar in material, design, and extent to that indicated for this Project and with a record of successful in-service performance.

1.6 PROJECT CONDITIONS

A. Coordinate Work of this Section with interfacing and adjoining Work for proper sequencing of each installation. Ensure best possible weather resistance, durability of Work, and protection of materials and finishes.

PART 2 - PRODUCTS

2.1 METALS

A. Aluminum: Alloy and temper recommended by aluminum producer and finisher for type of use and finish indicated and with not less than the strength and durability of alloy and temper designated below:

1. Factory-Painted Aluminum Sheet: ASTM B 209 (ASTM B 209M), 3003-H14, with a minimum thickness of 0.050 inch, unless otherwise indicated.

B. Stainless-Steel Sheet: ASTM A 167, Type 304, soft annealed, with No. 2D finish, except where harder temper is required for forming or performance; minimum 0.0187 inch (0.5 mm) thick, unless otherwise indicated.

2.2 MISCELLANEOUS MATERIALS AND ACCESSORIES

A. Burning Rod for Lead: Same composition as lead sheet.

B. Solder: ASTM B 32, Grade Sn50, used with rosin flux.

C. Solder for Stainless Steel: ASTM B 32, Grade Sn60, used with an acid flux of type recommended by stainless-steel sheet manufacturer; use a noncorrosive rosin flux over tinned surfaces.

D. Stainless-Steel Welding Rods: Type recommended by stainless-steel sheet manufacturer for type of metal sheets furnished.

E. Fasteners: Same metal as sheet metal flashing or other noncorrosive metal as recommended by sheet metal manufacturer. Match finish of exposed heads with material being fastened.

F. Asphalt Mastic: SSPC-Paint 12, solvent-type asphalt mastic, nominally free of sulfur and containing no asbestos fibers, compounded for 15-mil (0.4-mm) dry film thickness per coat.

G. Mastic Sealant: Polyisobutylene; nonhardening, nonskinning, nondrying, nonmigrating sealant.

H. Elastomeric Sealant: Generic type recommended by sheet metal manufacturer and fabricator of components being sealed and complying with requirements for joint sealants as specified in Division 07 Section "Joint Sealants."

I. Epoxy Seam Sealer: 2-part, noncorrosive, aluminum seam-cementing compound, recommended by aluminum manufacturer for exterior and interior nonmoving joints, including riveted joints.

J. Adhesives: Type recommended by flashing sheet metal manufacturer for waterproof and weather-resistant seaming and adhesive application of flashing sheet metal.

K. Paper Slip Sheet: 5-lb/square (0.244 kg/sq. m) red rosin, sized building paper conforming to FS UU-B-790, Type I, Style 1b.

L. Polyethylene Underlayment: ASTM D 4397, minimum 6-mil- (0.15-mm-) thick black polyethylene film, resistant to decay when tested according to ASTM E 154.

M. Metal Accessories: Provide sheet metal clips, straps, anchoring devices, and similar accessory units as required for installation of Work, matching or compatible with material being installed; noncorrosive; size and thickness required for performance.

2.3 FABRICATION, GENERAL

A. Sheet Metal Fabrication Standard: Fabricate sheet metal flashing and trim to comply with recommendations of SMACNA's "Architectural Sheet Metal Manual" that apply to the design, dimensions, metal, and other characteristics of the item indicated.

B. Comply with details shown to fabricate sheet metal flashing and trim that fit substrates and result in waterproof and weather-resistant performance once installed. Verify shapes and dimensions of surfaces to be covered before fabricating sheet metal.

C. Form exposed sheet metal Work that is without excessive oil canning, buckling, and tool marks and that is true to line and levels indicated, with exposed edges folded back to form hems.

D. Seams: Fabricate nonmoving seams in sheet metal with flat-lock seams. Tin edges to be seamed, form seams, and solder.

E. Seams: Fabricate nonmoving seams in aluminum with flat-lock seams. Form seams and seal with epoxy seam sealer. Rivet joints for additional strength.

F. Expansion Provisions: Space movement joints at maximum of 10 feet (3 m) with no joints allowed within 24 inches (610 mm) of corner or intersection. Where lapped or bayonet-type expansion provisions in Work cannot be used or would not be sufficiently weatherproof and waterproof, form expansion joints of intermeshing hooked flanges, not less than 1 inch (25 mm) deep, filled with mastic sealant (concealed within joints).

G. Sealed Joints: Form non-expansion, but movable, joints in metal to accommodate elastomeric sealant to comply with SMACNA standards.

H. Separate metal from noncompatible metal or corrosive substrates by coating concealed surfaces at locations of contact with asphalt mastic or other permanent separation as recommended by manufacturer.

I. Conceal fasteners and expansion provisions where possible. Exposed fasteners are not allowed on faces of sheet metal exposed to public view.

J. Fabricate cleats and attachment devices from same material as sheet metal component being anchored or from compatible, noncorrosive metal recommended by sheet metal manufacturer.

1. Size: As recommended by SMACNA manual or sheet metal manufacturer for application but never less than thickness of metal being secured.

2.4 SHEET METAL FABRICATIONS

A. General: Fabricate sheet metal items in thickness or weight needed to comply with performance requirements but not less than that listed below for each application and metal.

B. Drip Edges: Fabricate from:

1. Aluminum: 0.050 inch thick.

C. Roof-Penetration Flashing: Fabricate from:

1. Stainless Steel: 0.0187 inch (0.5 mm) thick.

2.5 ALUMINUM EXTRUSION FABRICATIONS

A. Aluminum Extrusion Units: Fabricate extruded-aluminum running units with formed or extruded-aluminum joint covers for installation behind main members where possible. Fabricate mitered and welded corner units.

PART 3 - EXECUTION

3.1 EXAMINATION

A. Examine substrates and conditions under which sheet metal flashing and trim are to be installed and verify that Work may properly commence. Do not proceed with installation until unsatisfactory conditions have been corrected.

3.2 INSTALLATION

A. General: Unless otherwise indicated, install sheet metal flashing and trim to comply with performance requirements, manufacturer's installation instructions, and SMACNA's "Architectural Sheet Metal Manual." Anchor units of Work securely in place by methods indicated, providing for thermal expansion of metal units; conceal fasteners where possible, and set units true to line and level as indicated. Install Work with laps, joints, and seams that will be permanently watertight and weatherproof.

B. Install exposed sheet metal Work that is without excessive oil canning, buckling, and tool marks and that is true to line and levels indicated, with exposed edges folded back to form hems. Install sheet metal flashing and trim to fit substrates and to result in

waterproof and weather-resistant performance. Verify shapes and dimensions of surfaces to be covered before fabricating sheet metal.

C. Roof-Edge Flashings: Secure metal flashings at roof edges according to FM Loss Prevention Data Sheet 1-49 for specified wind zone.

D. Expansion Provisions: Provide for thermal expansion of exposed sheet metal Work. Space movement joints at maximum of 10 feet (3 m) with no joints allowed within 24 inches (610 mm) of corner or intersection. Where lapped or bayonet-type expansion provisions in Work cannot be used or would not be sufficiently weatherproof and waterproof, form expansion joints of intermeshing hooked flanges, not less than 1 inch (25 mm) deep, filled with mastic sealant (concealed within joints).

E. Soldered Joints: Clean surfaces to be soldered, removing oils and foreign matter. Pretin edges of sheets to be soldered to a width of 1-1/2 inches (38 mm), except where pretinned surface would show in finished Work.

1. Do not solder the following metals:

a. Aluminum.
b. Coil-coated galvanized steel sheet.

2. Pretinning is not required for the following metals:

a. Lead.
b. Lead-coated copper.
c. Terne-coated stainless steel.

3. Do not use torches for soldering. Heat surfaces to receive solder and flow solder into joint. Fill joint completely. Completely remove flux and spatter from exposed surfaces.

F. Sealed Joints: Form non-expansion, but movable, joints in metal to accommodate elastomeric sealant to comply with SMACNA standards. Fill joint with sealant and form metal to completely conceal sealant.

1. Use joint adhesive for nonmoving joints specified not to be soldered.

G. Seams: Fabricate nonmoving seams in sheet metal with flat-lock seams. Tin edges to be seamed, form seams, and solder.

H. Seams: Fabricate nonmoving seams in aluminum with flat-lock seams. Form seams and seal with epoxy seam sealer. Rivet joints for additional strength.

I. Separations: Separate metal from noncompatible metal or corrosive substrates by coating concealed surfaces, at locations of contact, with asphalt mastic or other permanent separation as recommended by manufacturer.

1. Underlayment: Where installing stainless steel or aluminum directly on cementitious or wood substrates, install a slip sheet of red-rosin paper and a course of polyethylene underlayment.

2. Bed flanges of Work in a thick coat of roofing cement where required for waterproof performance.

J. Counterflashings: Coordinate installation of counterflashings with installation of assemblies to be protected by counterflashing. Install counterflashings in reglets or receivers. Secure in a waterproof manner by means of snap-in installation and sealant, lead wedges and sealant, interlocking folded seam, or blind rivets and sealant. Lap counterflashing joints a minimum of 2 inches (50 mm) and bed with sealant.

K. Equipment Support Flashing: Coordinate equipment support flashing installation with roofing and equipment installation. Weld or seal flashing to equipment support member.

L. Roof-Penetration Flashing: Coordinate roof-penetration flashing installation with roofing and installation of items penetrating roof. Install flashing as follows:

1. Turn lead flashing down inside vent piping, being careful not to block vent piping with flashing.

2. Seal and clamp flashing to pipes penetrating roof, other than lead flashing on vent piping.

3.3 CLEANING AND PROTECTION

A. Clean exposed metal surfaces, removing substances that might cause corrosion of metal or deterioration of finishes.

B. Provide final protection and maintain conditions that ensure sheet metal flashing and trim Work during construction is without damage or deterioration other than natural weathering at the time of Substantial Completion.

END OF SECTION

SECTION 07 84 00
FIRESTOPPING

PART 1 GENERAL

1.01 RELATED REQUIREMENTS

A. Section 01 70 00 - Execution and Closeout Requirements: Cutting and patching.

1.02 REFERENCE STANDARDS

A. ASTM E119 - Standard Test Methods for Fire Tests of Building Construction and Materials; 2015.

B. ASTM E814 - Standard Test Method for Fire Tests of Through-Penetration Fire Stops; 2013a.

C. FM (AG) - FM Approval Guide; current edition.

D. FM 4991 - Approval Standard for Firestop Contractors; 2013.

E. ITS (DIR) - Directory of Listed Products; current edition.

F. SCAQMD 1168 - South Coast Air Quality Management District Rule No.1168; current edition.

G. UL (FRD) - Fire Resistance Directory; current edition.

H. UL 1479 - Standard for Fire Tests of Penetration Firestops; Current Edition, Including All Revisions.

1.03 SUBMITTALS

A. See Section 01 30 00 - Administrative Requirements for submittal procedures.

B. Schedule of Firestopping: List each type of penetration, fire rating of the penetrated assembly, and firestopping test or design number.

C. Product Data: Provide data on product characteristics, performance ratings, and limitations.

D. Manufacturer's qualification statement.

E. Installer's qualification statement.

1.04 QUALITY ASSURANCE

A. Fire Testing: Provide firestopping assemblies of designs that provide the scheduled fire ratings when tested in accordance with methods indicated.
   1. Listing in UL (FRD), FM (AG), or ITS (DIR) will be considered as constituting an acceptable test report.
   2. Valid evaluation report published by ICC Evaluation Service, Inc. (ICC-ES) at www.icc-es.org will be considered as constituting an acceptable test report.

B. Manufacturer Qualifications: Company specializing in manufacturing the products specified in this section with minimum three years documented experience.

C. Installer Qualifications: Company specializing in performing the work of this section and:
   1. Approved by Factory Mutual Research Corporation under FM 4991, or meeting any two of the following requirements:
   2. Verification of minimum three years documented experience installing work of this type.
   3. Verification of at least five satisfactorily completed projects of comparable size and type.
   4. Licensed by local authorities having jurisdiction (AHJ).

PART 2 PRODUCTS

2.01 MATERIALS

A. Primers, Sleeves, Forms, Insulation, Packing, Stuffing, and Accessories: Provide type of materials as required for tested firestopping assembly.

2.02 FIRESTOPPING SYSTEMS

A. Firestopping: Any material meeting requirements.

1. Fire Ratings: Use system that is listed by FM (AG), ITS (DIR), or UL (FRD) and tested in accordance with ASTM E814, ASTM E119, or UL 1479 with F Rating equal to fire rating of penetrated assembly and minimum T Rating Equal to F Rating and in compliance with other specified requirements.

2.03 MATERIALS

A. Firestopping Sealants: Provide only products having lower volatile organic compound (VOC) content than required by South Coast Air Quality Management District Rule No.1168.

B. Elastomeric Silicone Firestopping: Single component silicone elastomeric compound and compatible silicone sealant; conforming to the following:
   1. Color: Black, dark gray, or red.
   2. Manufacturers:
      a. A/D Fire Protection Systems Inc: www.adfire.com.
      b. 3M Fire Protection Products: www.3m.com/firestop.
      c. Hilti, Inc: www.us.hilti.com.
      d. Specified Technologies, Inc: www.stifirestop.com.
      e. Substitutions: See Section 01 60 00 - Product Requirements.

C. Foam Firestoppping: Single component silicone foam compound; conforming to the following:
   1. Durability and Longevity: Permanent.
   2. Color: Dark grey.
   3. Manufacturers:
      a. 3M Fire Protection Products: www.3m.com/firestop.
      b. Hilti, Inc: www.us.hilti.com.
      c. Specified Technologies, Inc: www.stifirestop.com.
      d. Substitutions: See Section 01 60 00 - Product Requirements.

D. Fibered Compound Firestopping: Formulated compound mixed with incombustible non-asbestos fibers; conforming to the following:
   1. Durability and Longevity: Permanent.
   2. Color: Dark grey.
   3. Manufacturers:
      a. A/D Fire Protection Systems Inc: www.adfire.com.
      b. USG: www.usg.com.
      c. Substitutions: See Section 01 60 00 - Product Requirements.

E. Fiber Firestopping: Mineral fiber insulation used in conjunction with elastomeric surface sealer forming airtight bond to opening; conforming to the following:
   1. Durability and Longevity: Permanent.
   2. Manufacturers:
      a. A/D Fire Protection Systems Inc: www.adfire.com.
      b. Pecora Corporation: www.pecora.com.
      c. Thermafiber, Inc: www.thermafiber.com.
      d. Substitutions: See Section 01 60 00 - Product Requirements.

F. Firestop Devices - Wrap Type: Mechanical device with incombustible filler and sheet stainless steel jacket, intended to be installed after penetrating item has been installed; conforming to the following:
   1. Manufacturers:
      a. Grace Construction Products: www.na.graceconstruction.com.
      b. 3M Fire Protection Products: www.3m.com/firestop.
      c. Hilti, Inc: www.us.hilti.com.
      d. Specified Technologies, Inc: www.stifirestop.com.
      e. Substitutions: See Section 01 60 00 - Product Requirements.

G. Intumescent Putty: Compound that expands on exposure to surface heat gain; conforming to the following:
   1. Potential Expansion: Minimum 1000 percent.
   2. Durability and Longevity: Permanent.
   3. Color: Black, dark gray, or red.
   4. Manufacturers:
      a. Grace Construction Products: www.na.graceconstruction.com.
      b. 3M Fire Protection Products: www.3m.com/firestop.
      c. Hilti, Inc: www.us.hilti.com.
      d. Specified Technologies, Inc: www.stifirestop.com.
      e. Substitutions: See Section 01 60 00 - Product Requirements.

H. Primers, Sleeves, Forms, Insulation, Packing, Stuffing, and Accessories: Type required for tested assembly design.

PART 3 EXECUTION

3.01 PREPARATION

A. Clean substrate surfaces of dirt, dust, grease, oil, loose material, or other materials that could adversely affect bond of firestopping material.

B. Remove incompatible materials that could adversely affect bond.

C. Install backing materials to prevent liquid material from leakage.

3.02 INSTALLATION

A. Install materials in manner described in fire test report and in accordance with manufacturer's instructions, completely closing openings.

B. Do not cover installed firestopping until inspected by authorities having jurisdiction.

3.03 CLEANING

A. Clean adjacent surfaces of firestopping materials.

3.04 PROTECTION

A. Protect adjacent surfaces from damage by material installation.

END OF SECTION

This page intentionally left blank

SECTION 07 92 00

JOINT SEALANTS

PART 1 GENERAL

1.01 RELATED REQUIREMENTS

A. Section 01 61 16 - Volatile Organic Compound (VOC) Content Restrictions: Additional requirements for sealants and primers.

1.02 REFERENCE STANDARDS

A. ASTM C834 - Standard Specification for Latex Sealants 2017.

B. ASTM C920 - Standard Specification for Elastomeric Joint Sealants 2018.

C. ASTM C1193 - Standard Guide for Use of Joint Sealants 2016.

D. ASTM C1248 - Standard Test Method for Staining of Porous Substrate by Joint Sealants 2018.

1.03 SUBMITTALS

A. See Section 01 33 23 – Shop Drawings, Product Data and Samples.

B. Product Data for Sealants: Submit manufacturer's technical data sheets for each product to be used, that includes the following.
   1. Physical characteristics, including movement capability, VOC content, hardness, cure time, and color availability.
   2. List of backing materials approved for use with the specific product.
   3. Substrates that product is known to satisfactorily adhere to and with which it is compatible.
   4. Substrates the product should not be used on.

C. Color Cards for Selection: Where sealant color is not specified, submit manufacturer's color cards showing standard colors available for selection.

PART 2 PRODUCTS

2.01 MANUFACTURERS

A. Non-Sag Sealants: Permits application in joints on vertical surfaces without sagging or slumping.
   1. ADFAST Corporation: www.adfastcorp.com
   2. Everkem Diversified Products, Inc: www.everkemproducts.com
   3. Franklin International, Inc: www.titebond.com
   4. Pecora Corporation: www.pecora.com
   5. Sherwin-Williams Company: www.sherwin-williams.com

2.02 JOINT SEALANT APPLICATIONS

A. Scope:
   1. Exterior Joints: Seal open joints, whether or not the joint is indicated on drawings, unless specifically indicated not to be sealed. Exterior joints to be sealed include, but are not limited to, the following items.
      a. Wall expansion and control joints.
      b. Joints between door, window, and other frames and adjacent construction.
      c. Joints between different exposed materials.
      d. Openings below ledge angles in masonry.
      e. Other joints indicated below.
   2. Interior Joints: Do not seal interior joints unless specifically indicated to be sealed. Interior joints to be sealed include, but are not limited to, the following items.
      a. Joints between door, window, and other frames and adjacent construction.
      b. Other joints indicated below.
   3. Do not seal the following types of joints.
      a. Intentional weepholes in masonry.
      b. Joints indicated to be treated with manufactured expansion joint cover or some other type of sealing device.
      c. Joints where sealant is specified to be provided by manufacturer of product to be sealed.
      d. Joints where installation of sealant is specified in another section.
      e. Joints between suspended panel ceilings/grid and walls.

B. Exterior Joints: Use non-sag non-staining silicone sealant, unless otherwise indicated.

C. Interior Joints: Use non-sag polyurethane sealant, unless otherwise indicated.
   1. Wall and Ceiling Joints in Non-Wet Areas: Acrylic emulsion latex sealant.

2.03 JOINT SEALANTS - GENERAL

A. Sealants and Primers: Provide products with acceptable levels of volatile organic compound (VOC) content.

2.04 NONSAG JOINT SEALANTS

A. Non-Staining Silicone Sealant: ASTM C920, Grade NS, Uses M and A; not expected to withstand continuous water immersion or traffic.
   1. Movement Capability: Plus and minus 25 percent, minimum.
   2. Non-Staining To Porous Stone: Non-staining to light-colored natural stone when tested in accordance with ASTM C1248.
   3. Dirt Pick-Up: Reduced dirt pick-up compared to other silicone sealants.
   4. Color: Match adjacent finished surfaces.

B. Polyurethane Sealant: ASTM C920, Grade NS, Uses M and A; single or multi-component; not expected to withstand continuous water immersion or traffic.
   1. Movement Capability: Plus and minus 25 percent, minimum.
   2. Color: To be selected by Architect from manufacturer's standard range.
   3. Service Temperature Range: Minus 40 to 180 degrees F (Minus 40 to 82 degrees C).

C. Acrylic Emulsion Latex: Water-based; ASTM C834, single component, non-staining, non-bleeding, non-sagging; not intended for exterior use.
   1. Color: To be selected by Architect from manufacturer's standard range.
   2. Grade: ASTM C834; Grade 0 Degrees F (Minus 18 Degrees C).

2.05 ACCESSORIES

A. Backer Rod: Cylindrical cellular foam rod with surface that sealant will not adhere to, compatible with specific sealant used, and recommended by backing and sealant manufacturers for specific application.

B. Backing Tape: Self-adhesive polyethylene tape with surface that sealant will not adhere to and recommended by tape and sealant manufacturers for specific application.

C. Masking Tape: Self-adhesive, nonabsorbent, non-staining, removable without adhesive residue, and compatible with surfaces adjacent to joints and sealants.

D. Primers: Type recommended by sealant manufacturer to suit application; non-staining.

PART 3 EXECUTION

3.01 EXAMINATION

A. Verify that joints are ready to receive work.

B. Verify that backing materials are compatible with sealants.

C. Verify that backer rods are of the correct size.

3.02 PREPARATION

A. Remove loose materials and foreign matter that could impair adhesion of sealant.

B. Clean joints, and prime as necessary, in accordance with manufacturer's instructions.

C. Perform preparation in accordance with manufacturer's instructions and ASTM C1193.

D. Mask elements and surfaces adjacent to joints from damage and disfigurement due to sealant work; be aware that sealant drips and smears may not be completely removable.

3.03 INSTALLATION

A. Perform work in accordance with sealant manufacturer's requirements for preparation of surfaces and material installation instructions.

B. Perform installation in accordance with ASTM C1193.

C. Install bond breaker backing tape where backer rod cannot be used.

D. Install sealant free of air pockets, foreign embedded matter, ridges, and sags, and without getting sealant on adjacent surfaces.

E. Do not install sealant when ambient temperature is outside manufacturer's recommended temperature range, or will be outside that range during the entire curing period, unless manufacturer's approval is obtained and instructions are followed.

F. Nonsag Sealants: Tool surface concave, unless otherwise indicated; remove masking tape immediately after tooling sealant surface.

END OF SECTION

SECTION 08 11 13

HOLLOW METAL DOORS AND FRAMES

PART 1 - GENERAL

1.1 SUMMARY

A. Section includes hollow-metal work.

1.2 DEFINITIONS

A. Minimum Thickness: Minimum thickness of base metal without coatings according to NAAMM-HMMA 803 or SDI A250.8.

1.3 ACTION SUBMITTALS

A. Product Data: For each type of product.

B. Shop Drawings: Include elevations, door edge details, frame profiles, metal thicknesses, preparations for hardware, and other details.

C. Schedule: Prepared by or under the supervision of supplier, using same reference numbers for details and openings as those on Drawings.

PART 2 - PRODUCTS

2.1 MANUFACTURERS

A. Manufacturers: Subject to compliance with requirements, available manufacturers offering products that may be incorporated into the Work include, but are not limited to, the following:
1. Amweld International, LLC
2. Apex Industries
3. Ceco Door Products; an Assa Abloy Group company
4. Commercial Door & Hardware Inc.
5. Concept Frames, Inc.
6. Curries Company; an Assa Abloy Group company
7. Custom Metal Products
8. Daybar
9. Deansteel
10. De La Fontaine Industries
11. DKS Steel Door & Frame Sys. Inc.
12. Door Components, Inc.
13. Fleming-Baron Door Products
14. Gensteel Doors, Inc.

15. Greensteel Industries, Ltd.
16. HMF Express
17. Hollow Metal Inc.
18. Hollow Metal Xpress
19. J/R Metal Frames Manufacturing, Inc.
20. Karpen Steel Custom Doors & Frames
21. L.I.F. Industries, Inc.
22. LaForce, Inc.
23. Megamet Industries, Inc.
24. Mesker Door, Inc.
25. Michbi Doors, Inc.
26. MPI Group LLC (The)
27. National Custom Hollow Metal
28. North American Door Corp.
29. Philipp Manufacturing Co. (The)
30. Pioneer Products, Inc.
31. Premier Products, Inc.
32. Republic Doors and Frames
33. Rocky Mountain Metals, Inc.
34. Security Metal Products Corp.
35. Shanahans Manufacturing Ltd.
36. Steelcraft; an Ingersoll-Rand company
37. Steward Steel, Door Division
38. Stiles Custom Metal, Inc.
39. Titan Metal Products, Inc.
40. Trillium Steel Doors Limited
41. West Central Mfg. Inc.
42. Approved equal.

2.2 REGULATORY REQUIREMENTS

A. Fire-Rated Assemblies: Complying with NFPA 80 and listed and labeled by a qualified testing agency acceptable to authorities having jurisdiction for fire-protection ratings indicated, based on testing at positive pressure according to NFPA 252 or UL 10C.

1. Smoke- and Draft-Control Assemblies: Provide an assembly with gaskets listed and labeled for smoke and draft control by a qualified testing agency acceptable to authorities having jurisdiction, based on testing according to UL 1784 and installed in compliance with NFPA 105.

B. Fire-Rated, Borrowed-Lite Assemblies: Complying with NFPA 80 and listed and labeled by a testing and inspecting agency acceptable to authorities having jurisdiction for fire-protection ratings indicated, based on testing according to NFPA 257 or UL 9.

2.3 INTERIOR DOORS AND FRAMES

A. Standard-Duty Doors and Frames: SDI A250.8, Level 1. At showroom.

1. Physical Performance: Level C according to SDI A250.4.
2. Doors:

    a. Type: As indicated in the Door and Frame Schedule.
    b. Thickness: 1-3/4 inches (44.5 mm).
    c. Face: Uncoated, cold-rolled steel sheet, minimum thickness of 0.032 inch (0.8 mm).
    d. Edge Construction: Model 1, Full Flush.
    e. Core: Manufacturer's standard.

3. Frames:

    a. Materials: Uncoated, cold-rolled steel sheet, minimum thickness of 0.042 inch (1.0 mm).
    b. Construction: Knocked down.

4. Exposed Finish: Prime.

B. Heavy-Duty Doors and Frames: SDI A250.8, Level 2. At service shop.

1. Physical Performance: Level B according to SDI A250.4.
2. Doors:

    a. Type: As indicated in the Door and Frame Schedule.
    b. Thickness: 1-3/4 inches (44.5 mm).
    c. Face: Uncoated, cold-rolled steel sheet, minimum thickness of 0.042 inch (1.0 mm).
    d. Edge Construction: Model 1, Full Flush.
    e. Core: Manufacturer's standard.

3. Frames:

    a. Materials: Uncoated, steel sheet, minimum thickness of 0.053 inch (1.3 mm).
    b. Construction: Knocked down.

4. Exposed Finish: Prime.

2.4 EXTERIOR HOLLOW-METAL DOORS AND FRAMES

A. Heavy-Duty Doors and Frames: SDI A250.8, Level 2.

1. Physical Performance: Level B according to SDI A250.4.
2. Doors:

    a. Type: As indicated in the Door and Frame Schedule.
    b. Thickness: 1-3/4 inches (44.5 mm).
    c. Face: Metallic-coated steel sheet, minimum thickness of 0.042 inch (1.0 mm), with minimum A40 (ZF120) coating.
    d. Edge Construction: Model 1, Full Flush.
    e. Core: Manufacturer's standard insulation material.

3. Thermal-Rated Doors: Provide doors fabricated with thermal-resistance U-value of 0.340 when tested according to ASTM C 1363.

4. Frames:

   a. Materials: Metallic-coated steel sheet, minimum thickness of 0.053 inch (1.3 mm), with minimum A40 (ZF120) coating.
   b. Construction: Knocked down.

5. Exposed Finish: Prime.

2.5 FRAME ANCHORS

A. Jamb Anchors:

1. Masonry Type: Adjustable strap-and-stirrup or T-shaped anchors to suit frame size, not less than 0.042 inch (1.0 mm) thick, with corrugated or perforated straps not less than 2 inches (51 mm) wide by 10 inches (254 mm) long; or wire anchors not less than 0.177 inch (4.5 mm) thick.
2. Stud-Wall Type: Designed to engage stud, welded to back of frames; not less than 0.042 inch (1.0 mm) thick.
3. Compression Type for Drywall Slip-on Frames: Adjustable compression anchors.
4. Postinstalled Expansion Type for In-Place Concrete or Masonry: Minimum 3/8-inch-(9.5-mm-) diameter bolts with expansion shields or inserts. Provide pipe spacer from frame to wall, with throat reinforcement plate, welded to frame at each anchor location.

B. Floor Anchors: Formed from same material as frames, minimum thickness of 0.042 inch (1.0 mm), and as follows:

1. Monolithic Concrete Slabs: Clip-type anchors, with two holes to receive fasteners.
2. Separate Topping Concrete Slabs: Adjustable-type anchors with extension clips, allowing not less than 2-inch (51-mm) height adjustment. Terminate bottom of frames at finish floor surface.

2.6 MATERIALS

A. Cold-Rolled Steel Sheet: ASTM A 1008/A 1008M, Commercial Steel (CS), Type B; suitable for exposed applications.

B. Hot-Rolled Steel Sheet: ASTM A 1011/A 1011M, Commercial Steel (CS), Type B; free of scale, pitting, or surface defects; pickled and oiled.

C. Metallic-Coated Steel Sheet: ASTM A 653/A 653M, Commercial Steel (CS), Type B.

D. Frame Anchors: ASTM A 879/A 879M, Commercial Steel (CS), 04Z (12G) coating designation; mill phosphatized.

1. For anchors built into exterior walls, steel sheet complying with ASTM A 1008/A 1008M or ASTM A 1011/A 1011M, hot-dip galvanized according to ASTM A 153/A 153M, Class B.

E. Inserts, Bolts, and Fasteners: Hot-dip galvanized according to ASTM A 153/A 153M.

F. Power-Actuated Fasteners in Concrete: From corrosion-resistant materials.

G. Grout: ASTM C 476, except with a maximum slump of 4 inches (102 mm), as measured according to ASTM C 143/C 143M.

H. Mineral-Fiber Insulation: ASTM C 665, Type I (blankets without membrane facing).

I. Bituminous Coating: Cold-applied asphalt mastic, compounded for 15-mil (0.4-mm) dry film thickness per coat.

2.7 FABRICATION

A. Fabricate hollow-metal work to be rigid and free of defects, warp, or buckle. Accurately form metal to required sizes and profiles, with minimum radius for metal thickness. Where practical, fit and assemble units in manufacturer's plant. To ensure proper assembly at Project site, clearly identify work that cannot be permanently factory assembled before shipment.

B. Hollow-Metal Doors:

1. Exterior Doors: Provide weep-hole openings in bottoms of exterior doors to permit moisture to escape. Seal joints in top edges of doors against water penetration.

2. Astragals: Provide overlapping astragal on one leaf of pairs of doors where required by NFPA 80 for fire-performance rating or where indicated.

C. Hollow-Metal Frames: Where frames are fabricated in sections due to shipping or handling limitations, provide alignment plates or angles at each joint, fabricated of same thickness metal as frames.

1. Frames: Provide closed tubular members with no visible face seams or joints, fabricated from same material as door frame. Fasten members at crossings and to jambs by butt welding.
2. Provide countersunk, flat- or oval-head exposed screws and bolts for exposed fasteners unless otherwise indicated.
3. Grout Guards: Weld guards to frame at back of hardware mortises in frames to be grouted.
4. Floor Anchors: Weld anchors to bottoms of jambs with at least four spot welds per anchor; however, for slip-on drywall frames, provide anchor clips or countersunk holes at bottoms of jambs.
5. Jamb Anchors: Provide number and spacing of anchors as follows:

a. Masonry Type: Locate anchors not more than 16 inches (406 mm) from top and bottom of frame. Space anchors not more than 32 inches (813 mm) o.c., to match coursing, and as follows:

1) Two anchors per jamb up to 60 inches (1524 mm) high.
2) Three anchors per jamb from 60 to 90 inches (1524 to 2286 mm) high.
3) Four anchors per jamb from 90 to 120 inches (2286 to 3048 mm) high.
4) Four anchors per jamb plus one additional anchor per jamb for each 24 inches (610 mm) or fraction thereof above 120 inches (3048 mm) high.

b. Stud-Wall Type: Locate anchors not more than 18 inches (457 mm) from top and bottom of frame. Space anchors not more than 32 inches (813 mm) o.c. and as follows:

1) Three anchors per jamb up to 60 inches (1524 mm) high.
2) Four anchors per jamb from 60 to 90 inches (1524 to 2286 mm) high.
3) Five anchors per jamb from 90 to 96 inches (2286 to 2438 mm) high.
4) Five anchors per jamb plus one additional anchor per jamb for each 24 inches (610 mm) or fraction thereof above 96 inches (2438 mm) high.

c. Compression Type: Not less than two anchors in each frame.
d. Postinstalled Expansion Type: Locate anchors not more than 6 inches (152 mm) from top and bottom of frame. Space anchors not more than 26 inches (660 mm) o.c.

6. Door Silencers: Except on weather-stripped frames, drill stops to receive door silencers.

a. Single-Door Frames: Drill stop in strike jamb to receive three door silencers.
b. Double-Door Frames: Drill stop in head jamb to receive two door silencers.

D. Hardware Preparation: Factory prepare hollow-metal work to receive templated mortised hardware; include cutouts, reinforcement, mortising, drilling, and tapping according to SDI A250.6, the Door Hardware Schedule, and templates.

1. Reinforce doors and frames to receive nontemplated, mortised, and surface-mounted door hardware.
2. Comply with applicable requirements in SDI A250.6 and BHMA A156.115 for preparation of hollow-metal work for hardware.

E. Stops and Moldings: Provide stops and moldings around glazed lites and louvers where indicated. Form corners of stops and moldings with [butted] [or] [mitered] hairline joints.

1. Single Glazed Lites: Provide fixed stops and moldings welded on secure side of hollow-metal work.
2. Multiple Glazed Lites: Provide fixed and removable stops and moldings so that each glazed lite is capable of being removed independently.
3. Provide fixed frame moldings on outside of exterior and on secure side of interior doors and frames.
4. Provide loose stops and moldings on inside of hollow-metal work.

5. Coordinate rabbet width between fixed and removable stops with glazing and installation types indicated.

2.8 STEEL FINISHES

A. Prime Finish: Clean, pretreat, and apply manufacturer's standard primer.

1. Shop Primer: SDI A250.10.

PART 3 - EXECUTION

3.1 INSTALLATION

A. Hollow-Metal Frames: Install hollow-metal frames for doors, transoms, sidelites, borrowed lites, and other openings, of size and profile indicated. Comply with SDI A250.11 or NAAMM-HMMA 840 as required by standards specified.

1. Set frames accurately in position; plumbed, aligned, and braced securely until permanent anchors are set. After wall construction is complete, remove temporary braces, leaving surfaces smooth and undamaged.

   a. At fire-rated openings, install frames according to NFPA 80.
   b. Where frames are fabricated in sections because of shipping or handling limitations, field splice at approved locations by welding face joint continuously; grind, fill, dress, and make splice smooth, flush, and invisible on exposed faces.
   c. Install frames with removable stops located on secure side of opening.
   d. Install door silencers in frames before grouting.
   e. Remove temporary braces necessary for installation only after frames have been properly set and secured.
   f. Check plumb, square, and twist of frames as walls are constructed. Shim as necessary to comply with installation tolerances.
   g. Field apply bituminous coating to backs of frames that will be filled with grout containing antifreezing agents.

2. Floor Anchors: Provide floor anchors for each jamb and mullion that extends to floor, and secure with postinstalled expansion anchors.

   a. Floor anchors may be set with power-actuated fasteners instead of postinstalled expansion anchors if so indicated and approved on Shop Drawings.

3. Metal-Stud Partitions: Solidly pack mineral-fiber insulation inside frames.
4. Masonry Walls: Coordinate installation of frames to allow for solidly filling space between frames and masonry with grout.
5. Concrete Walls: Solidly fill space between frames and concrete with mineral-fiber insulation.

6. In-Place Concrete or Masonry Construction: Secure frames in place with postinstalled expansion anchors. Countersink anchors, and fill and make smooth, flush, and invisible on exposed faces.
7. In-Place Metal or Wood-Stud Partitions: Secure slip-on drywall frames in place according to manufacturer's written instructions.

8. Installation Tolerances: Adjust hollow-metal door frames for squareness, alignment, twist, and plumb to the following tolerances:

    a. Squareness: Plus or minus 1/16 inch (1.6 mm), measured at door rabbet on a line 90 degrees from jamb perpendicular to frame head.
    b. Alignment: Plus or minus 1/16 inch (1.6 mm), measured at jambs on a horizontal line parallel to plane of wall.
    c. Twist: Plus or minus 1/16 inch (1.6 mm), measured at opposite face corners of jambs on parallel lines, and perpendicular to plane of wall.
    d. Plumbness: Plus or minus 1/16 inch (1.6 mm), measured at jambs at floor.

B. Hollow-Metal Doors: Fit hollow-metal doors accurately in frames, within clearances specified below. Shim as necessary.

1. Non-Fire-Rated Steel Doors:

    a. Between Door and Frame Jambs and Head: 1/8 inch (3.2 mm) plus or minus 1/32 inch (0.8 mm).
    b. Between Edges of Pairs of Doors: 1/8 inch (3.2 mm) to 1/4 inch (6.3 mm) plus or minus 1/32 inch (0.8 mm).
    c. At Bottom of Door: [3/4 inch (19.1 mm)] [5/8 inch (15.8 mm)] plus or minus 1/32 inch (0.8 mm).
    d. Between Door Face and Stop: 1/16 inch (1.6 mm) to 1/8 inch (3.2 mm) plus or minus 1/32 inch (0.8 mm).

2. Fire-Rated Doors: Install doors with clearances according to NFPA 80.
3. Smoke-Control Doors: Install doors and gaskets according to NFPA 105.

C. Glazing: Comply with installation requirements in Section 088000 "Glazing" and with hollow-metal manufacturer's written instructions.

1. Secure stops with countersunk flat- or oval-head machine screws spaced uniformly not more than 9 inches (230 mm) o.c. and not more than 2 inches (51 mm) o.c. from each corner.

3.2 ADJUSTING AND CLEANING

A. Final Adjustments: Check and readjust operating hardware items immediately before final inspection. Leave work in complete and proper operating condition. Remove and replace defective work, including hollow-metal work that is warped, bowed, or otherwise unacceptable.

B. Remove grout and other bonding material from hollow-metal work immediately after installation.

C. Prime-Coat Touchup: Immediately after erection, sand smooth rusted or damaged areas of prime coat and apply touchup of compatible air-drying, rust-inhibitive primer.

D. Metallic-Coated Surface Touchup: Clean abraded areas and repair with galvanizing repair paint according to manufacturer's written instructions.

E. Touchup Painting: Cleaning and touchup painting of abraded areas of paint are specified in painting Sections.

END OF SECTION

This page intentionally left blank.

SECTION 08 14 16

FLUSH WOOD DOORS

PART 1 GENERAL

1.01 SECTION INCLUDES

A. Flush wood doors;

1.02 RELATED REQUIREMENTS

A. Section 08 12 13 - Hollow Metal Frames.

B. Section 08 71 00 - Door Hardware.

1.03 REFERENCE STANDARDS

1.04 SUBMITTALS

A. See Section 01 33 23 Shop Drawings, product data and samples.

B. Shop Drawings: Show doors and frames, elevations, sizes, types, swings, undercuts, beveling, blocking for hardware, factory machining, factory finishing, cutouts for glazing and other details.

C. Samples: Submit two samples of door veneer, illustrating wood grain, stain color, and sheen.

1.05 QUALITY ASSURANCE

A. Maintain one copy of the specified door quality standard on site for review during installation and finishing.

1.06 DELIVERY, STORAGE, AND HANDLING

A. Package, deliver and store doors in accordance with specified quality standard.

B. Accept doors on site in manufacturer's packaging, and inspect for damage.

C. Protect doors with resilient packaging sealed with heat shrunk plastic; do not store in damp or wet areas or areas where sunlight might bleach veneer; seal top and bottom edges with tinted sealer if stored more than one week, and break seal on site to permit ventilation.

PART 2 PRODUCTS

2.01 MANUFACTURERS

A. Wood Veneer Faced Doors:
   1. Haley Brothers: www.haleybros.com

2. Krieger Specialty Products: www.kriegerproducts.com
3. Masonite Architectural: www.architectural.masonite.com
4. Oregon Door: www.oregondoor.com
5. Approved equal.

2.02 DOORS

A. Doors: See drawings for locations and additional requirements.

B. Interior Doors: 1-3/4 inches (44 mm) thick unless otherwise indicated; flush construction.
   1. Provide solid core doors at each location.

2.03 DOOR FACINGS

A. Veneer Facing for Transparent Finish: White birch, veneer grade in accordance with quality standard indicated, plain sliced (rotary cut), with book match between leaves of veneer, running match of spliced veneer leaves assembled on door or panel face.

2.04 DOOR CONSTRUCTION

A. Fabricate doors in accordance with door quality standard specified.

B. Factory machine doors for hardware other than surface-mounted hardware, in accordance with hardware requirements and dimensions.

C. Factory fit doors for frame opening dimensions identified on shop drawings, with edge clearances in accordance with specified quality standard.

D. Provide edge clearances in accordance with the quality standard specified.

2.05 FINISHES - WOOD VENEER DOORS

A. Factory finish doors in accordance with approved sample.

PART 3 EXECUTION

3.01 EXAMINATION

A. Verify existing conditions before starting work.

B. Verify that opening sizes and tolerances are acceptable.

C. Do not install doors in frame openings that are not plumb or are out-of-tolerance for size or alignment.

3.02 INSTALLATION

A. Install doors in accordance with manufacturer's instructions and specified quality standard.

B. Factory-Finished Doors: Do not field cut or trim; if fit or clearance is not correct, replace door.

C. Use machine tools to cut or drill for hardware.

D. Coordinate installation of doors with installation of frames and hardware.

3.03 ADJUSTING

A. Adjust doors for smooth and balanced door movement.

B. Adjust closers for full closure.

END OF SECTION

SECTION 08 41 13

ALUMINUM-FRAMED ENTRANCES AND STOREFRONTS

PART 1 – GENERAL

1.1 RELATED DOCUMENTS

A. Drawings and general provisions of the Contract, including General and Supplementary Conditions and Division 01 Specification Sections, apply to this Section.

1.2 SUMMARY

A. Section Includes: Kawneer Architectural Aluminum Storefront Systems, including perimeter trims, stools, accessories, shims and anchors, and perimeter sealing of storefront units.

1. Types of Kawneer Aluminum Storefront Systems include:

a. Trifab™ VG 450 Framing System – Interior 1-3/4" x 4-1/2" nominal dimension; Non-Thermal; Center, Structural Silicone or Weatherseal Glazed (Type B); Screw Spline Fabrication.
b. Trifab™ VG 451T Framing System – Exterior 1-3/4" x 4-1/2" nominal dimension; Center, Structural Silicone or Weatherseal Glazed (Type B); Screw Spline Fabrication.

1.3 DEFINITIONS

A. Definitions: For fenestration industry standard terminology and definitions refer to American Architectural Manufacturers Association (AAMA) – AAMA Glossary (AAMA AG).

1.4 PERFORMANCE REQUIREMENTS

A. Storefront System Performance Requirements:

1. Wind loads: Provide storefront system; include anchorage, capable of withstanding wind load design pressures for this region. The design pressures are based on the International Building Code; 2021 Edition.
2. Air Leakage: The test specimen shall be tested in accordance with ASTM E 283. Air Leakage rate shall not exceed 0.06 cfm/ft2 (0.3 l/s · m2) at a static air pressure differential of 6.2 psf (300 Pa) with interior seal, or, rate shall not exceed 0.06 cfm/ft2 (0.3 l/s · m2) at a static air pressure differential of 1.6 psf (75 Pa) without interior seal. CSA A440 Fixed Rating.
3. Water Resistance: The test specimen shall be tested in accordance with ASTM E 331. There shall be no leakage at a minimum static air pressure differential of 8 psf (383 Pa) as defined in AAMA 501.
4. Uniform Load: A static air design load of 35 psf (1680 Pa) shall be applied in the positive and negative direction in accordance with ASTM E 330. There shall be

no deflection in excess of L/175 of the span of any framing member. At a structural test load equal to 1.5 times the specified design load, no glass breakage or permanent set in the framing members in excess of 0.2% of their clear spans shall occur.

5. Seismic: When tested to AAMA 501.4, system must meet design displacement of 0.010 x the story height and ultimate displacement of 1.5 x the design displacement.
6. Thermal Movements: Allow for thermal movements resulting from the following maximum change (range) in ambient and surface temperatures:
   a. Temperature Change (Range): 0 deg F (-18 deg C); 180 deg F (82 deg C).
   b. Test Interior Ambient-Air Temperature: [75 deg F (24 deg C)] .
   c. Test Performance: No buckling; stress on glass; sealant failure; excess stress on framing, anchors, and fasteners; or reduction of performance when tested according to AAMA 501.5 for a minimum 3 cycles.
7. Thermal Transmittance (U-factor): When tested to AAMA Specification 1503, the thermal transmittance (U-factor) shall not be more than:
   a. Glass to Exterior – 0.560 BTU/hr/ft2/°F.
   b. Glass to Center – 0.560 BTU/hr/ft2/°F.
   c. Glass to Interior – 0.560 BTU/hr/ft2/°F.
8. Condensation Resistance (CRF): When tested to AAMA Specification 1503, the condensation resistance factor shall not be less than:
   a. Glass to Exterior – 70frame and 69glass (low-e) or 69frame and 58glass (clear).
   b. Glass to Center – 62frame and 68glass (low-e) or 63frame and 56glass (clear).
   c. Glass to Interior – 56frame and 67glass (low-e) or 54frame and 58glass (clear).
9. Sound Transmission Class (STC) and Outdoor-Indoor Transmission Class (OITC): When tested to AAMA Specification 1801 and in accordance with ASTM E1425 and ASTM E90, the STC and OITC Rating shall not be less than:
   a. Glass to Exterior – 38 (STC) and 31 (OITC).
   b. Glass to Center – 37 (STC) and 30 (OITC).
   c. Glass to Interior – 38 (STC) and 30 (OITC).
10. Windborne-Debris-Impact Resistance Performance: Shall be tested in accordance with ASTM E 1886, information in ASTM E 1996 and TAS 201/203.
    a. Large-Missile Impact: For aluminum-framed systems located within 30 feet (9.1 m) of grade.
    b. Small-Missile Impact: For aluminum-framed systems located above 30 feet (9.1 m) of grade.

1.5 SUBMITTALS

A. Product Data: Include construction details, material descriptions, dimensions of individual components and profiles, hardware, finishes, and installation instructions for each type of aluminum-framed storefront system indicated.

B. Shop Drawings: Include plans, elevations, sections, details, hardware, and attachments to other work, operational clearances and installation details.

C. Samples for Initial Selection: For units with factory-applied color finishes including samples of hardware and accessories involving color selection.

D. Samples for Verification: For aluminum-framed storefront system and components required.
E. Product Test Reports: Based on evaluation of comprehensive tests performed by a qualified testing agency for each type of aluminum-framed storefront.
F. Fabrication Sample: Of each vertical-to-horizontal intersection of aluminum-framed systems, made from 12" (304.8 mm) lengths of full-size components and showing details of the following:
    1. Joinery.
    2. Anchorage.
    3. Expansion provisions.
    4. Glazing.
    5. Flashing and drainage.
G. Other Action Submittals:
    1. Entrance Door Hardware Schedule: Prepared by or under the supervision of supplier, detailing fabrication and assembly of entrance door hardware, as well as procedures and diagrams. Coordinate final entrance door hardware schedule with doors, frames, and related work to ensure proper size, thickness, hand, function, and finish of entrance door hardware.

1.6 QUALITY ASSURANCE

A. Installer Qualifications: An installer which has had successful experience with installation of the same or similar units required for the project and other projects of similar size and scope.
B. Manufacturer Qualifications: A manufacturer capable of providing aluminum-framed storefront system that meet or exceed performance requirements indicated and of documenting this performance by inclusion of test reports, and calculations.
C. Source Limitations: Obtain aluminum-framed storefront system through one source from a single manufacturer.
D. Product Options: Drawings indicate size, profiles, and dimensional requirements of aluminum-framed storefront system and are based on the specific system indicated. Refer to Division 01 Section “Product Requirements”. Do not modify size and dimensional requirements.
    1. Do not modify intended aesthetic effects, as judged solely by Architect, except with Architect's approval. If modifications are proposed, submit comprehensive explanatory data to Architect for review.
E. Pre-installation Conference: Conduct conference at Project site to comply with requirements in Division 01 Section “Project Management and Coordination”.
F. Structural-Sealant Glazing: Comply with ASTM C 1401, “Guide for Structural Sealant Glazing” for design and installation of structural-sealant-glazed systems.
G. Structural-Sealant Joints: Design reviewed and approved by structural-sealant manufacturer.

1.7 PROJECT CONDITIONS

A. Field Measurements: Verify actual dimensions of aluminum-framed storefront openings by field measurements before fabrication and indicate field measurements on Shop Drawings.

1.8 WARRANTY

A. Manufacturer's Warranty: Submit, for Owner's acceptance, manufacturer's standard warranty.
   1. Warranty Period: Two (2) years from Date of Substantial Completion of the project provided however that the Limited Warranty shall begin in no event later than six months from date of shipment by manufacturer.

PART 2 – PRODUCTS

2.1 MANUFACTURERS

A. Basis-of-Design Product:
   1. Kawneer Company Inc.
   2. Trifab™ VG 450 Interior or Trifab™ 451T Exterior (Thermal) Framing System
   3. System Dimensions: 2" x 4-1/2" (50.8 mm x 114.3 mm)
   4. Glass: Exterior and Center
   5. Doors: 500 – Wide stile with 10" bottom rail.

B. ASSA Abloy Entrance Systems.

C. YKK

D. Substitution Acceptance: Acceptance will be in written form, either as an addendum or modification, and documented by a formal change order signed by the Owner and Contractor.

2.2 MATERIALS

A. Aluminum Extrusions: Alloy and temper recommended by aluminum storefront manufacturer for strength, corrosion resistance, and application of required finish and not less than 0.070" (1.8 mm) wall thickness at any location for the main frame and complying with ASTM B 221: 6063-T6 alloy and temper.
B. Fasteners: Aluminum, nonmagnetic stainless steel or other materials to be non-corrosive and compatible with aluminum framing members, trim hardware, anchors, and other components.
C. Anchors, Clips, and Accessories: Aluminum, nonmagnetic stainless steel, or zinc-coated steel or iron complying with ASTM B 633 for SC 3 severe service conditions or other suitable zinc coating; provide sufficient strength to withstand design pressure indicated.
D. Reinforcing Members: Aluminum, nonmagnetic stainless steel, or nickel/chrome-plated steel complying with ASTM B 456 for Type SC 3 severe service conditions, or zinc-coated steel or iron complying with ASTM B 633 for SC 3 severe service conditions or other suitable zinc coating; provide sufficient strength to withstand design pressure indicated.
E. Sealant: For sealants required within fabricated storefront system, provide permanently elastic, non-shrinking, and non-migrating type recommended by sealant manufacturer for joint size and movement.
F. Tolerances: Reference to tolerances for wall thickness and other cross-sectional dimensions of storefront members are nominal and in compliance with AA Aluminum Standards and Data.

2.3 STOREFRONT FRAMING SYSTEM

A. Thermal Barrier (Trifab™ VG 451T):
   1. Kawneer IsoLock™ Thermal Break with a 1/4" (6.4 mm) separation consisting of a two-part chemically curing, high-density polyurethane, which is mechanically and adhesively joined to aluminum storefront sections.
      a. Thermal Break shall be designed in accordance with AAMA TIR-A8 and tested in accordance with AAMA 505.
B. Brackets and Reinforcements: Manufacturer's standard high-strength aluminum with nonstaining, nonferrous shims for aligning system components.
C. Fasteners and Accessories: Manufacturer's standard corrosion-resistant, nonstaining, nonbleeding fasteners and accessories compatible with adjacent materials. Where exposes shall be stainless steel.
D. Perimeter Anchors: When steel anchors are used, provide insulation between steel material and aluminum material to prevent galvanic action
E. Packing, Shipping, Handling and Unloading: Deliver materials in manufacturer's original, unopened, undamaged containers with identification labels intact.
F. Storage and Protection: Store materials protected from exposure to harmful weather conditions. Handle storefront material and components to avoid damage. Protect storefront material against damage from elements, construction activities, and other hazards before, during and after storefront installation.

2.4 GLAZING SYSTEMS

A. Glazing Gaskets: Manufacturer's standard compression types; replaceable, extruded EPDM rubber.
B. Spacers and Setting Blocks: Manufacturer's standard elastomeric type.
C. Bond-Breaker Tape: Manufacturer's standard TFE-fluorocarbon or polyethylene material to which sealants will not develop adhesion.
D. Glazing Sealants: For structural-sealant-glazed systems, as recommended by manufacturer for joint type, and as follows:
   1. Structural Sealant: ASTM C 1184, single-component neutral-curing silicone formulation that is compatible with system components with which it comes in contact, specifically formulated and tested for use as structural sealant and approved by a structural-sealant manufacturer for use in aluminum-framed systems indicated.
      a. Color: Black
   2. Weatherseal Sealant: ASTM C 920 for Type S, Grade NS, Class 25, Uses NT, G, A, and O; single-component neutral-curing formulation that is compatible with structural sealant and other system components with which it comes in contact; recommended by structural-sealant, weatherseal-sealant, and aluminum-framed-system manufacturers for this use.
      a. Color: Matching structural sealant.

2.5 ENTRANCE DOOR SYSTEMS

A. Entrance Doors: As specified in Division 08 41 13 Section “Aluminum-Framed Entrances and Storefronts”.
B. Entrance Door Hardware: As specified in Division 08 71 00 Section “Door Hardware”.

2.6 FABRICATION

A. Framing Members, General: Fabricate components that, when assembled, have the following characteristics:
   1. Profiles that are sharp, straight, and free of defects or deformations.
   2. Accurately fit joints; make joints flush, hairline and weatherproof.
   3. Means to drain water passing joints, condensation within framing members, and moisture migrating within the system to exterior.
   4. Physical and thermal isolation of glazing from framing members.
   5. Accommodations for thermal and mechanical movements of glazing and framing to maintain required glazing edge clearances.
   6. Provisions for field replacement of glazing.
   7. Fasteners, anchors, and connection devices that are concealed from view to greatest extent possible.

B. Mechanically Glazed Framing Members: Fabricate for flush glazing without projecting stops.

C. Structural-Sealant-Glazed Framing Members: Include accommodations for using temporary support device to retain glazing in place while structural sealant cures.

D. Storefront Framing: Fabricate components for assembly using manufacturer's standard installation instructions.

E. After fabrication, clearly mark components to identify their locations in Project according to Shop Drawings.

2.8 ALUMINUM FINISHES

A. Finish designations prefixed by AA comply with the system established by the Aluminum Association for designating aluminum finishes.

B. Factory Finishing:
   1. Kawneer Permanodic™ AA-M10C21A31, AAMA 611, Architectural Class II Clear Anodic Coating (Color #17 Clear) (Standard).

PART 3 – EXECUTION

3.1 EXAMINATION

A. Examine openings, substrates, structural support, anchorage, and conditions, with Installer present, for compliance with requirements for installation tolerances and other conditions affecting performance of work. Verify rough opening dimensions, levelness of sill plate and operational clearances. Examine wall flashings, vapor retarders, water and weather barriers, and other built-in components to ensure a coordinated, weather tight framed aluminum storefront system installation.
   1. Masonry Surfaces: Visibly dry and free of excess mortar, sand, and other construction debris.
   2. Wood Frame Walls: Dry, clean, sound, well nailed, free of voids, and without offsets at joints. Ensure that nail heads are driven flush with surfaces in opening and within 3 inches (76 mm) of opening.
   3. Metal Surfaces: Dry; clean; free of grease, oil, dirt, rust, corrosion, and welding slag; without sharp edges or offsets at joints.

4. Proceed with installation only after unsatisfactory conditions have been corrected.

3.2 INSTALLATION

A. Comply with Drawings, Shop Drawings, and manufacturer's written instructions for installing aluminum-framed storefront system, accessories, and other components.
B. Install aluminum-framed storefront system level, plumb, square, true to line, without distortion or impeding thermal movement, anchored securely in place to structural support, and in proper relation to wall flashing and other adjacent construction.
C. Set sill members in bed of sealant or with gaskets, as indicated, for weather tight construction.
D. Install aluminum-framed storefront system and components to drain condensation, water penetrating joints, and moisture migrating within aluminum-framed storefront to the exterior.
E. Separate aluminum and other corrodible surfaces from sources of corrosion or electrolytic action at points of contact with other materials.

3.3 ADJUSTING, CLEANING, AND PROTECTION

A. Clean aluminum surfaces immediately after installing aluminum-framed storefronts. Avoid damaging protective coatings and finishes. Remove excess sealants, glazing materials, dirt, and other substances.
B. Clean glass immediately after installation. Comply with glass manufacturer's written recommendations for final cleaning and maintenance. Remove nonpermanent labels, and clean surfaces.
C. Remove and replace glass that has been broken, chipped, cracked, abraded, or damaged during construction period.

END OF SECTION

This page intentionally left blank.

SECTION 08 71 00
DOOR HARDWARE

PART 1 GENERAL

1.01 SECTION INCLUDES

A. Hardware for wood, aluminum, and hollow metal doors.

B. Hardware for fire-rated doors.

C. Electrically operated and controlled hardware.

D. Lock cylinders for doors with balance of hardware specified in other sections.

E. Thresholds.

F. Smoke and draft control seals.

G. Weatherstripping and gasketing.

1.02 RELATED REQUIREMENTS

A. Section 081113 - Hollow Metal Doors and Frames.

B. Section 081116 - Aluminum Doors and Frames.

C. Section 081213 - Hollow Metal Frames.

D. Section 081416 - Flush Wood Doors.

E. Section 281000 - Access Control: Electronic access control devices.

1.03 REFERENCE STANDARDS

A. ADA Standards - Americans with Disabilities Act (ADA) Standards for Accessible Design 2010.

B. BHMA A156.1 - Standard for Butts and Hinges 2021.

C. BHMA A156.2 - Bored and Preassembled Locks and Latches 2017.

D. BHMA A156.3 - Exit Devices 2020.

E. BHMA A156.4 - Door Controls - Closers 2019.

F. BHMA A156.8 - Door Controls - Overhead Stops and Holders 2021.

G. BHMA A156.16 - Auxiliary Hardware 2018.

H. BHMA A156.18 - Materials and Finishes 2020.

I. BHMA A156.21 - Thresholds 2019.

J. BHMA A156.25 - Electrified Locking Devices 2018.

K. BHMA A156.26 - Standard for Continuous Hinges 2021.

L. BHMA A156.28 - Recommended Practices For Mechanical Keying Systems 2018.

M. BHMA A156.115 - Hardware Preparation In Steel Doors And Steel Frames 2016.

N. BHMA A156.115W - Hardware Preparation in Wood Doors with Wood or Steel Frames 2006.

O. DHI (H&S) - Sequence and Format for the Hardware Schedule 2019.

P. DHI (KSN) - Keying Systems and Nomenclature 2019.

Q. NFPA 70 - National Electrical Code Most Recent Edition Adopted by Authority Having Jurisdiction, Including All Applicable Amendments and Supplements.

R. NFPA 80 - Standard for Fire Doors and Other Opening Protectives 2022.

S. NFPA 101 - Life Safety Code Most Recent Edition Adopted by Authority Having Jurisdiction, Including All Applicable Amendments and Supplements.

T. NFPA 105 - Standard for Smoke Door Assemblies and Other Opening Protectives 2022.

U. NFPA 252 - Standard Methods of Fire Tests of Door Assemblies 2022.

V. UL 10C - Standard for Positive Pressure Fire Tests of Door Assemblies Current Edition, Including All Revisions.

1.04 ADMINISTRATIVE REQUIREMENTS

A. Coordinate the manufacture, fabrication, and installation of products that door hardware is installed on.

B. Sequence installation to ensure facility services connections are achieved in an orderly and expeditious manner.

C. Preinstallation Meeting: Convene a preinstallation meeting four weeks prior to commencing work of this section; require attendance by affected installers and the following:
   1. Architect.
   2. Installer's Architectural Hardware Consultant (AHC).
   3. Hardware Installer.
   4. Owner's Security Consultant.

D. Furnish templates for door and frame preparation to manufacturers and fabricators of products requiring internal reinforcement for door hardware.

E. Keying Requirements Meeting: Arrange meeting with Owner, Architect and finish hardware supplier to determine keying requirements immediately upon receipt of finishing hardware schedule.

1.05 SUBMITTALS

A. See Section 013000 - Administrative Requirements for submittal procedures.

B. Product Data: Manufacturer's catalog literature for each type of hardware, marked to clearly show products to be furnished for this project, and includes construction details, material descriptions, finishes, and dimensions and profiles of individual components.

C. Shop Drawings - Door Hardware Schedule: A detailed listing that includes each item of hardware to be installed on each door.
   1. Prepared by or under supervision of Architectural Hardware Consultant (AHC).
   2. Comply with DHI (H&S) using door numbering scheme and hardware set numbers as indicated in Contract Documents.
      a. Submit in vertical format.
   3. List groups and suffixes in proper sequence.
   4. Include complete description for each door listed.
   5. Include manufacturer's and product names, and catalog numbers; include functions, types, styles, sizes and finishes of each item.
   6. Include account of abbreviations and symbols used in schedule.

D. Shop Drawings - Electrified Door Hardware: Include diagrams for power, signal, and control wiring for electrified door hardware that include details of interface with building safety and security systems. Provide elevations and diagrams for each electrified door opening as follows:
   1. Prepared by or under supervision of Architectural Hardware Consultant (AHC) and Electrified Hardware Consultant (EHC).
   2. Elevations: Include front and back elevations of each door opening showing electrified devices with connections installed and an operations narrative describing how opening operates from either side at any given time.
   3. Diagrams: Include point-to-point wiring diagrams that show each device in door opening system with related colored wire connections to each device.

E. Manufacturer's Installation Instructions: Indicate special procedures and perimeter conditions requiring special attention.

F. Manufacturer's qualification statement.

G. Installer's qualification statement.

H. Supplier's qualification statement.

I. Maintenance Data: Include data on operating hardware, lubrication requirements, and inspection procedures related to preventative maintenance.
   1. Include manufacturer's parts lists and templates.
   2. Bitting List: List of combinations as furnished.

J. Keying Schedule: New Key System.
   1. Submit three (3) copies of Keying Schedule in compliance with requirements established during Keying Requirements Meeting unless otherwise indicated.

K. Warranty: Submit manufacturer's warranty and ensure that forms have been completed in Owner's name and registered with manufacturer.

L. Project Record Documents: Record actual locations of concealed equipment, services, and conduit.

M. Maintenance Materials and Tools: Furnish the following for Owner's use in maintenance of project.
   1. See Section 016000 - Product Requirements, for additional provisions.
   2. Tools: One set of each special wrench or tool applicable for each different or special hardware component, whether supplied by hardware component manufacturer or not.

1.06 QUALITY ASSURANCE

A. Standards for Fire-Rated Doors: Maintain one copy of each referenced standard on site, for use by Architect and Contractor.

B. Manufacturer Qualifications: Company specializing in manufacturing products specified in this section with minimum three years of documented experience.

C. Installer Qualifications: Company specializing in performing work of the type specified for commercial door hardware with at least three years of documented experience.

D. Supplier Qualifications: Company with certified Architectural Hardware Consultant (AHC) and Electrified Hardware Consultant (EHC) to assist in work of this section.

1.07 DELIVERY, STORAGE, AND HANDLING

A. Package hardware items individually; label and identify each package with door opening code to match door hardware schedule.

1.08 WARRANTY

A. See Section 017800 - Closeout Submittals for additional warranty requirements.

B. Manufacturer Warranty: Provide manufacturer warranty against defects in material and workmanship for period indicated, from Date of Substantial Completion. Complete forms in Owner's name and register with manufacturer.
   1. Closers: Ten years, minimum.
   2. Exit Devices: Five years, minimum.
   3. Locksets and Cylinders: Ten years, minimum.

PART 2 PRODUCTS

2.01 GENERAL REQUIREMENTS

A. Provide specified door hardware as required to make doors fully functional, compliant with applicable codes, and secure to extent indicated.

B. Provide individual items of single type, of same model, and by same manufacturer.

C. Locks: Provide a lock for each door, unless it's indicated that lock is not required.
   1. Lock Function: Provide lock and latch function numbers and descriptions of manufacturer's Series. As indicated in hardware sets.

2. Trim: Provide lever handle or pull trim on outside of each lock, unless otherwise indicated.
3. Strikes:
   a. Finish: To match lock or latch.
   b. Curved-Lip Strikes: Provide as standard, with extended lip to protect frame, unless otherwise indicated.
   c. Center Strike At Pairs of Doors:7/8 inch (22.2 mm) lip.

D. Closers:
1. Provide door closer on each exterior door, unless otherwise indicated.
2. Provide door closer on each fire-rated and smoke-rated door.
3. Spring hinges are not an acceptable self-closing device, unless otherwise indicated.

E. Overhead Stops and Holders (Door Checks).
1. Provide stop for every swinging door, unless otherwise indicated.
2. Overhead Stop is not required if positive stop feature is specified for door closer; positive stop feature of door closer is not an acceptable substitute for a stop, unless otherwise indicated.
3. Overhead stop is not required if a floor or wall stop has been specified for the door.

F. Drip Guards: Provide at head of outswinging exterior doors unless protected by roof or canopy directly overhead.

G. Thresholds:
1. Exterior Applications: Provide at each exterior door, unless otherwise indicated.

H. Smoke and Draft Control Seals:
1. Provide gasketing for smoke and draft control doors that complies with local codes, requirements of assemblies tested in accordance with UL 1784.

I. Weatherstripping and Gasketing:
1. Provide weatherstripping on each exterior door at head, jambs, and meeting stiles of door pairs, unless otherwise indicated.
2. Provide door bottom sweep on each exterior door, unless otherwise indicated.

J. Electrically Operated and/or Controlled Hardware: Provide necessary power supplies, power transfer hinges, relays, and interfaces as required for proper operation; provide wiring between hardware and control components and to building power connection in compliance with NFPA 70.

K. See Section 281000 for additional access control system requirements.

L. Fasteners:
1. Provide fasteners of proper type, size, quantity, and finish that comply with commercially recognized standards for proposed applications.
   a. Aluminum fasteners are not permitted.
   b. Provide phillips flat-head screws with heads finished to match door surface hardware unless otherwise indicated.
2. Provide machine screws for attachment to reinforced hollow metal and aluminum frames.
   a. Self-drilling (Tek) type screws are not permitted.
3. Provide stainless steel machine screws and lead expansion shields for concrete and masonry substrates.
4. Provide wall grip inserts for hollow wall construction.
5. Fire-Resistance-Rated Applications: Comply with NFPA 80.
   a. Provide wood or machine screws for hinges mortised to doors or frames, strike plates to frames, and closers to doors and frames.
   b. Provide steel through bolts for attachment of surface mounted closers, hinges, or exit devices to door panels unless proper door blocking is provided.

2.02 PERFORMANCE REQUIREMENTS

A. Provide door hardware products that comply with the following requirements:
   1. Applicable provisions of federal, state, and local codes.
      a. NFPA 101.
   2. Accessibility: ADA Standards and ICC A117.1.
   3. Fire-Resistance-Rated Doors: NFPA 80, listed and labeled by qualified testing agency for fire protection ratings indicated, based on testing at positive pressure in accordance with NFPA 252 or UL 10C.
   4. Hardware on Fire-Resistance-Rated Doors: Listed and classified by UL (DIR), ITS (DIR), or testing firm acceptable to authorities having jurisdiction as suitable for application indicated.
   5. Hardware for Smoke and Draft Control Doors: Provide door hardware that complies with local codes, and requirements of assemblies tested in accordance with UL 1784.
   6. Hardware Preparation for Steel Doors and Steel Frames: BHMA A156.115.
   7. Hardware Preparation for Wood Doors with Wood or Steel Frames: BHMA A156.115W.
   8. Products Requiring Electrical Connection: Listed and classified by UL (DIR) as suitable for the purpose specified.

2.03 HINGES

A. Manufacturers: Conventional butt hinges.
   1. BEST; dormakaba Group:
   2. Mckinney.
   3. Ives Hardware.

B. Properties:
   1. Butt Hinges: As applicable to each item specified.
      a. Standard Weight Hinges: Minimum of two (2) permanently lubricated non-detachable bearings.
      b. Heavy Weight Hinges: Minimum of four (4) permanently lubricated bearings on heavy weight hinges.
      c. Template screw hole locations.
      d. Bearings: Concealed fully hardened bearings.
      e. UL 10C listed for fire-resistance-rated doors.

C. Sizes: See Door Hardware Schedule.
   1. Hinge Widths: As required to clear surrounding trim.
   2. Sufficient size to allow 180 degree swing of door.

D. Finishes: See Door Hardware Schedule.
   1. Fully polish hinges; front, back, and barrel.

E. Grades:
   1. Butt Hinges: Comply with BHMA A156.1 and BHMA A156.7 for templated hinges.
   2. Comply with BHMA A156.18 Materials and Finishes.

F. Material: Base metal as indicated for each item by BHMA material and finish designation.

G. Types:
   1. Butt Hinges: Include full mortise hinges.

H. Options: As applicable to each item specified.

I. Quantities:
   1. Butt Hinges: Three (3) hinges per leaves up to 90 inches (2286 mm) in height. Add one (1) for each additional 30 inches (762 mm) in height or fraction thereof.
      a. Hinge weight and size unless otherwise indicated in hardware sets:

1) For doors up to 36 inches (914 mm) wide and up to 1-3/4 inches (44.5 mm) thick provide hinges with a minimum thickness of 0.134 inch (3.4 mm) and a minimum of 4-1/2 inches (114 mm) in height.
2) For doors from 36 inches (914 mm) wide up to 42 inches (1067 mm) wide and up to 1-3/4 inches (44.5 mm) thick provide hinges with a minimum thickness of 0.145 inch (3.7 mm) and a minimum of 4-1/2 inches (114 mm) in height.
3) For doors from 42 inches (1067 mm) wide up to 48 inches (1219 mm) wide and up to 1-3/4 inches (44.5 mm) thick provide hinges with a minimum thickness of 0.180 inch (4.6 mm) and a minimum of 5 inches (127 mm) in height.
4) For doors greater than 1-3/4 inches (44.5 mm) thick provide hinges with a minimum thickness of 0.180 inch (4.6 mm) and a minimum of 5 inches (127 mm) in height.

J. Applications: At swinging doors.
1. Provide non-removable pins at out-swinging doors with locking hardware and all exterior doors.

K. Products:
1. Butt Hinges:
a. Ball Bearing, Five (5) Knuckle.

2.04 CONTINUOUS HINGES

A. Manufactures:
1. Best Access
2. Roton
3. Select Hardware

Geared Continuous Hinges: As applicable to each item specified.
1) Non-handed.
2) Anti-spinning through-fastener.
3) UL 10C listed for fire-resistance-rated doors.
(a) Metal Door Installation: Rated up to 90 minutes.
(b) Wood Door Installation: Rated up to 60 minutes.
4) Sufficient size to permit door to swing 180 degrees

B. Finishes: See Door Hardware Schedule.

2.05 EXIT DEVICES

A. Manufacturers:
1. Dorma 8000 Series
2. Equals: As approved by architect.

B. Properties:
1. Actuation: Crossbar.
2. Touchpads: 'T" style metal touchpads and rail assemblies with matching chassis covers end caps.
3. Latch Bolts: Stainless steel deadlocking with 3/4 inch (19 mm) projection using latch bolt.
4. Lever Design: Match project standard lockset trims.
5. Cylinder: Include where cylinder dogging or locking trim is indicated.
6. Strike as recommended by manufacturer for application indicated.
7. Dogging:
a. Non-Fire-Resistance-Rated Devices: Cylinder 1/4 inch (6 mm) hex key dogging.
b. Fire-Resistance-Rated Devices: Manual dogging not permitted.

8. Touch bar assembly on wide style exit devices to have a 1/4 inch (6.3 mm) clearance to allow for vision frames.
9. All exposed exit device components to be of architectural metals and “true” architectural finishes.
10. Handing: Field-reversible.
11. Fasteners on Back Side of Device Channel: Concealed - exposed fasteners not allowed.
12. Vertical Latch Assemblies' Operation: Gravity, without use of springs.

C. Grades: Complying with BHMA A156.3, Grade 1.
   1. Provide exit devices tested and certified by UL or by a recognized independent laboratory for mechanical operational testing to 10 million cycles minimum with inspection confirming Grade 1 Loaded Forces have been maintained.

D. Standards Compliance:
   1. UL Listed for Panic and Fire for Class II Circuitry.
   2. Provide UL (DIR) listed exit device assemblies for fire-resistance-rated doors.
   3. Comply with UL 10C.

E. Code Compliance: As required by authorities having jurisdiction in the State in which the Project is located.
   1. Listed by UL as a Controlled Exit Device (FULA) and Special Locking Arrangements (FWAX) category.

F. Options:
   1. Electrified Devices:
   2. Delayed Egress Devices: Manufacturer's standard for the application.
   3. Internally mounted switch used to signal other components.
   4. Internally mounted switch that monitors the position of the latchbolt.
   5. MLR: Motorized latch retraction.

G. Products:
   1. 9000

2.06 ELECTRIC STRIKES

A. Manufacturers:
   1. RCI
   2. HES.
   3. Allegion.

B. Properties:
   1. Provide UL 1034 compliant devices.
   2. Provide UL 10C compliant devices.
   3. Include transformer and rectifier as necessary for complete installation.

C. Installation: Connect electric strikes into fire alarm where non-rated doors are scheduled to release with fire or sprinkler alarm condition.

2.07 LOCK CYLINDERS

A. Manufacturers:
   1. Dorma
   2. Equals: As approved by architect.

B. Material:
   1. Manufacturer's standard corrosion-resistant brass alloy.

C. Types: As applicable to each item specified.
   1. Conventional cores.

2.08 CYLINDRICAL LOCKS

A. Manufacturers:
   1. Dorma C100 Series
   2. Equals: As approved by architect.

B. Properties:
   1. Mechanical Locks:
      a. Fitting modified ANSI A115.2 door preparation.
      b. Door Thickness Fit: 1-3/8 inches (35 mm) to 2-1/4 inches (57 mm) thick doors.
      c. Construction: Hub, side plate, shrouded rose, locking pin to be a one-piece casting with a shrouded locking lug.
         1) Through-bolted anti-rotational studs.
      d. Cast stainless steel latch retractor with roller bearings for exceptionally smooth operation and superior strength and durability.
      e. Bored Hole: 2-1/8 inch (54 mm) diameter.
      f. Backset: 2-3/4 inches (70 mm) unless otherwise indicated.
      g. Latch: Single piece tail-piece construction.
         1) Latchbolt Throw: 9/16 inch (14.3 mm), minimum.
      h. Cylinders:
         1) Cylinder Core Types: Locks capable of supporting manufacturers' cores, as applicable.
      i. Lever Trim:
         1) Style: See Door Hardware Schedule.
         2) Outside Lever Sleeve: Seamless one-piece construction.

C. Finishes: See Door Hardware Schedule.
   1. Core Faces: Match finish of lockset.

D. Grades: Comply with BHMA A156.2, Grade 1, Series 4000, Operational Grade 1, Extra Heavy Duty.

E. Material: Manufacturer's standard for specified lock.

F. Products: Cylindrical locks, including mechanical and electrified types.
   1. C100 (Grade 1).

2.09 CLOSERS

A. Manufacturers:
   1. Dorma 8900 Series
   2. Equals: As approved by architect.

B. Grades:
   1. Closers: Comply with BHMA A156.4, Grade 1.
      a. Underwriters Laboratories Compliance:
         1) Product Listing: UL (DIR) and ULC for use on fire-resistance-rated doors.
            (a) UL 228 - Door Closers-Holders, With or Without Integral Smoke Detectors.

C. Installation:
   1. Mounting: Includes surface mounted installations.
   2. Mount closers on non-public side of door and stair side of stair doors unless otherwise noted in hardware sets.
   3. At outswinging exterior doors, mount closer on interior side of door.
   4. Provide adapter plates, shim spacers, and blade stop spacers as required by frame and door conditions.

5. Where an overlapping astragal is included on pairs of swinging doors, provide coordinator to ensure door leaves close in proper order.

2.10 OVERHEAD STOPS AND HOLDERS

A. Manufacturers:
   1. Architectural Builders Hardware Mfg (ABH)
   2. Glynn Johnson
   3. Rixson

B. Sizes: Manufacturer's standard for the application.

C. Finishes:
   1. Arms and Brackets: Zinc-plated.

D. Grades: As applicable to item specified.
   1. Comply with BHMA A156.8, Grade 1.

E. Types:
   1. Surface-applied.
   2. Concealed.

2.11 PROTECTION PLATES

A. Manufacturers:
   1. ABH.
   2. Burns.
   3. Trimco.

B. Properties:
   1. Plates:
      a. Kick Plates: Provide along bottom edge of push side of every wood door with closer, except aluminum storefront and glass entry doors, unless otherwise indicated.
         1) Size: 10 inches (254 mm) high by 2 inch (51 mm) less door width (LDW) on push side of door.
      b. Mop Plates: Provide along bottom edge of push side of doors to provide protection from cleaning liquids and equipment damage to door surface.
      c. Edges: Beveled, on four (4) unless otherwise indicated. CSK Screws.

C. Grades: Comply with BHMA A156.6.

D. Material: As indicated for each item by BHMA material and finish designation.
   1. Metal Properties: Stainless steel.
      a. Metal, Standard Duty: Thickness 0.050 inch (1.27 mm), minimum.

E. Installation:
   1. Fasteners: Countersunk screw fasteners

2.12 STOPS AND HOLDERS

A. Manufacturers:
   1. ABH.
   2. Burns.
   3. Trimco.

B. General: Provide overhead stop/holder when wall or floor stop is not feasible.

C. Grades:
   1. Door Holders, Wall Bumpers, and Floor Stops: Comply with BHMA A156.16 and Resilient Material Retention Test as described in this standard.

D. Types:

2.13 THRESHOLDS

A. Manufacturers:
   1. National Guard Products
   2. Pemko.
   3. Reese.

B. Properties:
   1. Threshold Surface: Fluted horizontal grooves across full width.

C. Grades: Thresholds: Comply with BHMA A156.21.

D. Material: Base metal as indicated for each item by BHMA material and finish designation.

E. Types: As applicable to project conditions. Provide barrier-free type at every location where specified.
   1. Saddle Thresholds: Without thermal break.
   2. Bumper Seal Thresholds with Gasket: Use silicone gaskets.

2.14 WEATHERSTRIPPING AND GASKETING

A. Manufacturers:
   1. National Guard Products, Inc: www.ngpinc.com/#sle.
   2. Pemko .
   3. Reese.

B. Products:
   1. Weatherstripping: See Door Hardware Schedule.
   2. Smoke Seals: See Door Hardware Schedule.
   3. Meeting Stile Seals: See Door Hardware Schedule.
   4. Door Bottom Seals:
      a. Door Sweeps: See Door Hardware Schedule.

2.15 ELECTRIFIED HARDWARE

A. Manufacturers: Door Position Switch
   1. Dorma MC4
   2. Securitron DPS
   3. SDC MC-4

B. Properties:
   1. Door Position Switches: Recessed devices with magnetic contacts.
      a. SPDT configuration.

2.16 KEYS AND CORES

A. Manufacturers:
   1. Dorma New Key System.
   2. Equals: As approved by architect.

B. Properties: Complying with guidelines of BHMA A156.28.
   1. Provide conventional core.
   2. Provide conventional cores for all locks listed in the hardware spec by one supplier even if door supplied by different manufacturer.
   3. Provide Standard keys and cores.
   4. Provide keying information in compliance with DHI (KSN) standards.
   5. Keying Schedule: Arrange for a keying meeting, with Architect, Owner and hardware supplier, and other involved parties to ensure locksets and locking hardware, are functionally correct and keying complies with project requirements.
   6. Keying: Master keyed.
   7. Supply keys in following quantities:
      a. Grand Master Keys: 2 each.

b. Master Keys: 4 each each group.
c. Change Keys: 2 each change keys for each keyed core.

8. Deliver keys with identifying tags to Owner by security shipment direct from manufacturer.

2.17 **KEY CABINETS**

A. Manufacturers:
1. Lund Equipment Company, Inc
2. Telkee

B. Properties:.
1. Key Management System: For each keyed lock on project, provide one set of consecutively numbered duplicate key tags with hanging hole and snap catch.
2. Security Key Tags: For each keyed lock on project, provide one set of matching key tags for permanent attachment to one key of each set.
3. Provide key collection envelopes, receipt cards, and index cards in quantity suitable to manage number of keys.
4. Mounting: Wall surface mounted.
5. CapacityActual quantity of keys, plus 50 percent additional capacity.
6. Key cabinet lock to facility's keying system.

C. Finishes: Baked enamel, manufacturer's standard color.

D. Material: Sheet steel.

2.18 **FINISHES**

A. Finishes: Identified in Hardware Sets.

PART 3 EXECUTION

3.01 **EXAMINATION**

A. Verify that doors and frames are ready to receive this work; labeled, fire-rated doors and frames are properly installed, and dimensions are as indicated on shop drawings.

B. Correct all defects prior to proceeding with installation.

C. Verify that electric power is available to power operated devices and of correct characteristics.

3.02 **INSTALLATION**

A. Install hardware in accordance with manufacturer's instructions and applicable codes.

B. Install hardware using the manufacturer’s fasteners provided. Drill and tap all screw holes located in metallic materials. Do not use “Riv-Nuts” or similar products.

C. Install hardware on fire-rated doors and frames in accordance with applicable codes and NFPA 80.

D. Install hardware for smoke and draft control doors in accordance with NFPA 105.

E. Use templates provided by hardware item manufacturer.

F. Do not install surface mounted items until application of finishes to substrate are fully completed.

G. Wash down masonry walls and complete painting or staining of doors and frames.

H. Complete finish flooring prior to installation of thresholds.

I. Set exterior door thresholds with full-width bead of elastomeric sealant at each point of contact with floor providing a continuous weather seal; anchor thresholds with stainless steel countersunk screws.

3.03 FIELD QUALITY CONTROL

A. Perform field inspection and testing under provisions of Section 014000 - Quality Requirements.

3.04 CLEANING

A. Clean finished hardware in accordance with manufacturer's written instructions after final adjustments have been made.

B. Clean adjacent surfaces soiled by hardware installation activities.

3.05 PROTECTION

A. Protect finished Work under provisions of Section 017000 - Execution and Closeout Requirements.

B. Do not permit adjacent work to damage hardware or finish.

END OF SECTION

Manufacturer list

ABH	Architectural Builders Hardware
BES	BEST
DKA	dormakaba Architectural
NGP	National Guard Products
RCI	Rutherford Controls Inc

Finish list

Code:	Name:
652	652
US27	Mill Aluminum
689	689
A	Anodized Aluminum
626	Satin Chrome
AL	AL
US32D	Satin Stainless Steel
Grey	Grey

Specification Report

Set #1 - Exterior Enter Only - Auto Operator

Doors: 101

1.0	Continuous Hinge	661 HD UL	AL	BES
1.0	Exit Device DKA	9300 CD	626	
1.0	Exit Trim DKA	9PBO03 D MCK		
1.0	Pull ABH	AB201 12HD	US32D	
1.0	Auto Operator	PROVIDED BY SECTION 087113		
1.0	Overhead Concealed ABH Stop	1020SL Series	US32D	
1.0	Actuator	946 HP 475 MO	32D	RCI
1.0	Door Position Switch DKA	MC4		
1.0	Door Sweep NGP	1015V LAR	US27	
1.0	Threshold NGP	896 S LAR (1/4-20 SS MS/EA)	A	

NOTE: Balance of seals by Aluminum Frame / Door manufacturer. Coordinate hardware with Aluminum Frame / Door manufacturer. Operation: Open Hours - Auto operator function only available from ingress/pull side of door. Exit device must be cylinder dogged prior to auto operator switched on. Closed Hours: Exit device is on locked position/undogged. Manual egress always allowed. Mechanical key bypass. Request to Exit by Security vendor. All wiring and conduit by electrical contractor. Coordinate wiring and installation with GC / EC / Security Vendor.

Set #2 - Vestibule Enter Only - Auto Operator

Doors: 102

1.0	Continuous Hinge	661 HD UL	AL	BES
1.0	Exit Device DKA	9300 CD	626	
1.0	Exit Trim DKA	9PBO03 D MCK		
1.0	Pull ABH	AB201 12HD	US32D	
1.0	Auto Operator	PROVIDED BY SECTION 087113		
1.0	Overhead Concealed ABH Stop	1020SL Series	US32D	
1.0	Actuator	946 HP 475 MO	32D	RCI
1.0	Door Position Switch DKA	MC4		

NOTE: Balance of seals by Aluminum Frame / Door manufacturer. Coordinate hardware with Aluminum Frame / Door manufacturer. Operation: Open Hours - Auto operator function only

available from ingress/pull side of door. Exit device must be cylinder dogged prior to auto operator switched on. Closed Hours: Exit device is on locked position/undogged. Manual egress always allowed. Mechanical key bypass. Request to Exit by Security vendor. All wiring and conduit by electrical contractor. Coordinate wiring and installation with GC / EC / Security Vendor.

Set #3 - Exterior Exit Only - Auto Operator

Doors: 103

1.0	Continuous Hinge	661 HD UL	AL	BES
1.0	Exit Device DKA	9300 CD MCK	626	
1.0	Electric Strike	0162 LM	32D	RCI
1.0	Auto Operator	PROVIDED BY SECTION 087113		
1.0	Overhead Concealed ABH Stop	1020SL Series	US32D	
1.0	Actuator	946 HP 475 MO	32D	RCI
1.0	Door Position Switch DKA	MC4		
1.0	Door Sweep NGP	1015V LAR	US27	
1.0	Threshold NGP	896 S LAR (1/4-20 SS MS/EA)	A	

NOTE: Balance of seals by Aluminum Frame / Door manufacturer. Coordinate hardware with Aluminum Frame / Door manufacturer. Operation: Open Hours - Auto operator function only available from egress side of door. Exit device must be cylinder dogged prior to auto operator switched on. Closed Hours: Exit device is on locked position/undogged. Activation of push side actuator releases electric strike allowing automatic operator to cycle. Electric strike powered by auto operator. Manual egress always allowed. Mechanical key bypass. Request to Exit by Security vendor. All wiring and conduit by electrical contractor. Coordinate wiring and installation with GC / EC / Security Vendor.

Set #4 - Vestibule Exit Only - Auto Operator

Doors: 104

1.0	Continuous Hinge	661 HD UL	AL	BES
1.0	Exit Device DKA	9300 CD MCK	626	
1.0	Electric Strike	0162 LM	32D	RCI
1.0	Auto Operator	PROVIDED BY SECTION 087113		
1.0	Overhead Concealed ABH Stop	1020SL Series	US32D	
1.0	Actuator	946 HP 475 MO	32D	RCI
1.0	Door Position Switch DKA	MC4		

NOTE: Balance of seals by Aluminum Frame / Door manufacturer. Coordinate hardware with

Aluminum Frame / Door manufacturer. Operation: Open Hours - Auto operator function only available from egress side of door. Exit device must be cylinder dogged prior to auto operator switched on. Closed Hours: Exit device is on locked position/undogged. Activation of push side actuator releases electric strike allowing automatic operator to cycle. Electric strike powered by auto operator. Manual egress always allowed. Mechanical key bypass. Request to Exit by Security vendor. All wiring and conduit by electrical contractor. Coordinate wiring and installation with GC / EC / Security Vendor.

Set #5 - Ext HMD - Card Access

Doors: 113

1.0	Continuous Hinge	662 HD UL	AL	BES
1.0	Exit Device DKA	9300 LD	626	
1.0	Exit Trim DKA	YR 03R D MCK	626	
1.0	Electric Strike	0162 LM	32D	RCI
1.0	Door Closer DKA	8916 SDS	689	
1.0	Protection Plate ABH	PP0050 10" x 2" LDW B4E	US32D	
1.0	Power Supply	DKPS-2A		RCI
1.0	Card Reader	CARD READER BY SECURITY VENDOR		
1.0	Door Position Switch DKA	MC4		
1.0	Wiring Diagrams	Furnished by HWDE Supplier		
1.0	Gasketing NGP	700N Head & Jambs (2)	A	
1.0	Drip Cap NGP	16 4" ODW	A	
1.0	Door Sweep NGP	1015V LAR	US27	
1.0	Threshold NGP	896 S LAR (1/4-20 SS MS/EA)	A	

NOTE: Operation: Door normally closed and locked. Presentation of valid credential to card reader releases electric strike allowing authorized entry. Free egress at all times. Request to Exit by Security vendor. All wiring and conduit by electrical contractor. Coordinate wiring and installation with GC / EC / Security Vendor.

Set #6 - Office
Doors: 105, 106, 107, 109, 110

3.0	Hinge	FBB179 4.5X4.5	652	BES
1.0	Office Lock DKA	C153 D LR C MKD		
1.0	Wall Stop ABH	AB400	626	
3.0	Silencers ABH	AB608-RKW	Grey	

Set #7 - Office
Doors: 111

3.0	Hinge	FBB179 4.5X4.5	652	BES
1.0	Storeroom Lock DKA	C180 D LR C MKD		
1.0	Door Closer DKA	8916 AF89	689	
1.0	Protection Plate ABH	PP0050 10" x 2" LDW B4E	US32D	
1.0	Wall Stop ABH	AB400	626	
3.0	Silencers ABH	AB608-RKW	Grey	

Set #8 - Client Services - Card Access
Doors: 108

1.0	Continuous Hinge	661 HD UL	AL	BES
1.0	Exit Device DKA	9300 LD	626	
1.0	Exit Trim DKA	9PBO03 D MCK		
1.0	Pull ABH	AB201 12HD	US32D	
1.0	Electric Strike	0162 LM	32D	RCI
1.0	Door Closer DKA	8916 SPA DP89 BSHD NFHD	689	
1.0	Wall Stop ABH	AB400	626	
1.0	Power Supply	DKPS-2A		RCI
1.0	Card Reader	CARD READER BY SECURITY VENDOR		
1.0	Wiring Diagrams	Furnished by HWDE Supplier		
1.0	Door Position Switch DKA	MC4		

NOTE: Balance of seals by Aluminum Frame / Door manufacturer. Coordinate hardware with Aluminum Frame / Door manufacturer. Operation: Door normally closed and locked. Presentation of

valid credential to card reader releases electric strike allowing authorized entry. Free egress at all times. Request to Exit by Security vendor. All wiring and conduit by electrical contractor. Coordinate wiring and installation with GC / EC / Security Vendor.

Set #9 - Closet
Doors: 112

3.0	Hinge	FBB179 4.5X4.5	652	BES
1.0	Passage Set DKA	C110 LR C		
1.0	Wall Stop ABH	AB400	626	
3.0	Silencers ABH	AB608-RKW	Grey	

END OF SECTION

This page intentionally left blank.

SECTION 08 71 13

AUTOMATIC DOOR OPERATORS

PART 1 GENERAL

1.1 RELATED DOCUMENTS

A. Drawings and general provisions of the Contract, including General and Supplementary Conditions and Division 01 Specification Sections, apply to this Section.

1.2 SUMMARY

A. This section includes the following types of automatic door operators:
   1. Low-energy door operators for swinging doors.

B. Related Sections:
   1. Division 7 Sections for caulking to the extent not specified in this section.
   2. Division 8 Sections for "Aluminum-Framed Entrances and Storefronts" for entrances furnished and installed separately in Division 8 Section.
   3. Division 8 Section "Door Hardware" for hardware to the extent not specified in this section.
   4. Division 8 Section "Glazing" for materials and installation requirements of glazing for automatic entrances.
   5. Division 26 and 28 Sections for electrical connections including conduit and wiring for automatic entrance operators and access-control devices.

1.3 REFERENCES

A. References: Comply with the version year adopted by the Authority Having Jurisdiction.
   1. ANSI A117.1 - Accessible and Usable Buildings and Facilities.
   2. ICC/IBC - International Building Code.
   3. CUL – Approved for use in Canada.
   4. NFPA 70 - National Electrical Code.
   5. NFPA 80 - Fire Doors and Windows.
   6. NFPA 101 - Life Safety Code.
   7. NFPA 105 - Installation of Smoke Door Assemblies.

B. American National Standards Institute (ANSI) / Builders Hardware Manufacturers Association (BHMA).
   1. ANSI/BHMA A156.19 Standards for Power Assist and Low Energy Power Operated Doors.

C. Underwriters Laboratories (UL).
   1. UL10C – Positive Pressure Fire Tests of Door Assemblies.

2. UL 325 - Standard for Safety for Door, Drapery, Gate, Louver, and Window Operators and Systems.

D. American Association of Automatic Door Manufacturers (AAADM).

E. American Society for Testing and Materials (ASTM).
1. ASTM B221 Standard Specification for Aluminum and Aluminum Alloy Extruded Bars, Rods, Wire, Profiles and Tubes.
2. ASTM B209 Standard Specification for Aluminum and Aluminum Alloy Sheet and Plate.

F. American Architectural Manufacturers Association (AAMA).
1. AAMA 611 Voluntary Specification for Anodized Architectural Aluminum.

G. National Association of Architectural Metal Manufacturers (NAAMM).
1. Metal Finishes Manual for Architectural Metal Products.

H. International Code Council (IBC).
1. IBC: International Building Code Building Code.

1.4 DEFINITIONS

A. Activation device: Device that, when actuated, sends an electrical signal to the door operator to initiate the door operation.

B. Monitored Safety Devices: A tested system that works in conjunction with the automatic door control that detects the presence of a person or an object within a zone where contact could occur and provides a signal to stop the movement of the door.

C. AAADM: American Association of Automatic Door Manufacturers.

D. Operating ambient Temperature Range: 5 Degrees F to plus 122 degrees F (minus 15 C to 50 degrees C).

E. For automatic door terminology, refer to ANSI/BHMA A 156.19 for definitions of terms.

1.5 PERFORMANCE REQUIREMENTS

A. General: Provide automatic doors that have been designed and fabricated to comply with specified performance requirements, as demonstrated by testing manufacturers corresponding systems.

B. Compliance:
1. ICC/IBC International Building Code
2. ANSI/BHMA A 156.19 American National Standard for Power Operated Doors Pedestrian Doors.
3. UL 325 Listed
4. NFPA 70 National Electrical Code.
5. NFPA 101 Life Safety Code
6. CUL Approved for use in Canada

7. UL Listed Fire Door Operator with Automatic Closer

C. Automatic Door equipment accommodates medium to heavy pedestrian traffic.

D. Opening Force Requirements:
1. Power-Operated swinging doors shall open with a manual force not to exceed 30 lbf (133N) to set the door in motion and 15 lbf to fully open the door with force applied at 1" (25mm) from the latched edge of the door. The required force to prevent a stopped door from opening or closing shall to exceed 15 lbf (67N) measured 1" (25mm) from the latch edge of the door at any point during the opening or closing.

E. Closing Time:
1. Door operators shall be field adjustable to close 90 degrees to 10 degrees in 3 seconds or longer per ANSI/BHMA A 156.19 standard.
2. Door shall be field adjusted to close from 10 degrees to fully closed position in not less than 1.5 seconds.

1.6 SUBMITTALS

A. Comply with Division 01 – Submittal Procedures.

B. Product Data: Manufacturer's product data sheets including installation details, material descriptions, dimensions of individual components and profiles fabrication, operational descriptions and finishes.

C. Shop Drawings: For automatic entrances. Include plans, elevations, sections, details, hardware mounting heights, additional accessories and attachments to other work.

D. Samples: color samples of exposed finish as required.

E. Informational Submittals: Manufacturers product information and applicable sustainability program credits that are available towards a LEED rated product certification.
1. Credit MR 4.1 and 4.2: Manufacture's or fabricator's certificate indicating percentage of post-consumer recycled content by weight and pre-consumer recycled content by weight for each product specified under this section.

F. Manufacturers Field Reports: Submit manufacturer's field reports from AAADM certified technician of inspection and approval of doors for compliance with ANSI/BHMA A 156.19 after completion of installation.

G. Operating and Maintenance Manuals: Provide manufacturers operating, owners and maintenance manuals for each item specified as required in Division 01, Closeout Submittals.

1.7 QUALITY ASSURANCE

A. Manufacturer Qualifications: 10 years minimum of documented experience in manufacturing door equipment similar to that indicated within this specification with a proven record of successful service performance. A manufacturer with company certificate issued by AAADM.

B. Installer Qualifications: Installers, trained by the primary product manufacturers, with a minimum 5 years documented experience installing and maintenance of units similar in material, design, and extent to that indicated in this specification and whose work has resulted in construction with a record of successful in-service performance. Manufacturer's authorized representative who is trained and approved for installation and maintenance of units by AAADM required for this Project

C. Source Limitations for Automatic Operators: Obtain each type of automatic door operator and senor components specified in this section from single source from single manufacturer.

D. Electrical Components, Devices, and Accessories: Listed and labeled as defined in NFPA 70, by a qualified testing agency, and marked for intended location and application.

E. Power-Operated Door Standard: ANSI/BHMA A 156.19 Current year.

F. Emergency-Exit Door Requirements: Comply with requirements of authorities having jurisdiction for automatic entrances serving as a required means of egress.

1.8 PROJECT CONDITIONS

A. Field Measurements: Verify actual dimensions of openings to receive automatic entrances by field measurements before fabrication.

1.9 COORDINATION

A. Coordinate door operators with doors, frames, and related work to ensure proper size, thickness, hand, function, and finish. Coordinate hardware for automatic entrances with hardware required for rest of project.

B. Electrical System Roughing-in: Coordinate layout and installation of automatic power door operator with connections to power supplies and access-control system.

1.10 WARRANTY

A. Automatic Door Operators to be free of defects in material and workmanship for a period of One (1) year from the date of substantial completion.

B. During the warranty period a factory trained technician shall preform service and affect repairs. A safety inspection shall be performed after each adjustment or repair and a completed inspection form submitted to the owner.

C. During the warranty period all warranty work shall be performed during normal working hours.

PART 2 - PRODUCTS

2.1 MANUFACTURER

A. dormakaba • Reamstown, PA • 1-844-SPEC-NOW (1-844-773-2669) • Website: www.dormakaba.us • Email: specnow@dorma.com

B. Substitutions: Requests for substitution and product approval in compliance with the specification must be submitted in writing and in accordance with the procedures outlined in Division 1, Section "Substitution Procedures". Approval of requests is at the discretion of the architect, owner, and their designated consultants.

2.2 AUTOMATIC SWING DOOR OPERATOR

Door 101: 1ea Auto Operator Exterior - Entry Only x Actuator Exterior mounted.

Door 102: 1ea Auto Operator Vest - Enter Only x Actuator Vestibule mounted.

Door 103: 1ea Auto Operator Vest – Exit Only Elec Strike x Actuator Vestibule mounted.

Door 104: 1ea Auto Operator Exterior - Exit Only Elec Strike x Actuator Vestibule mounted.

A. Model: DORMA, ED Series ED250 (Basis of Design) An Integrated, self-learning automatic swing door operator with an advanced CPU, a multistage gearbox with real time adaptive software and available user interface.
   1. Automatic Door Configuration:
      a. Configuration: Single swing door.
      b. Traffic Pattern: One-way as shown on drawings
      c. Mounting: Surface applied

B. Approved substitution manufacturer.
   1. Equals: As approved by architect.

C. Control Features
   1. Power-hold Close
   2. Built in Lock Delay
   3. On-Off-Hold Open switch control to control door function, (Automatic-Hold Open- Exit Only)
   4. On-Off Power Switch
   5. Fire Alarm Integration
   6. Field Adjustable Handing
   7. Push and Go
   8. Power Assist Opening Activation
   9. Intergraded Connections for Monitored Safety Sensors and other accessories.
   10. Integrated access control

D. Door Control Features
   1. Wind Load and Stack Pressure microprocessor monitored with power boost to ensure secure opening and closing in changing conditions.

2. Door Weight Max. ED 250 800 lbs.

E. Header Size: Fine header height at 2 ¾” by 5” 1/8” depth.

F.

2.3 ACTIVATION DEVICES

A. Activation Device:
1. RCI 946HP475- MO Push Plate: Hard wired engraved with "Push to Open" with a handicap logo.
2. Access control activator: Push Plate As shown at locations on drawings.

2.4 ELECTRICAL

A. Electrical 115 V AC +/- 10% 50/60 Hz 6.6 A max.

2.5 ALUMINUM FINISHES

A. Comply with NAAMM's "Metal Finishes Manual for Architectural and Metal Products" for recommendations for applying and designating finishes.

B. Anodized Finish:
1. Color Anodic Finish: AAMA 611, AA-M12C22A44, Class I, 0.018 mm

EXECUTION

PART 3 - EXECUTION

3.1 EXAMINATION

A. Examine doors and frames with Installer present, for compliance with requirements for installation tolerances, wall and floor construction and other conditions affecting performance of automatic entrances.

B. Examine roughing in for electrical source power to verify actual locations of wiring connections.

C. Proceed with installation only after unsatisfactory conditions have been corrected.

3.2 INSTALLATION

A. General: Do not install damaged components. Fit frame joints to produce hairline joints free of burrs and distortion. Rigidly secure non-movement joints.

B. Entrances: Install automatic entrances plumb and true in alignment with established lines and grades without warp or rack of framing members and doors. Anchor securely in place.
   1. Install surface-mounted hardware using concealed fasteners to greatest extent possible.
   2. Set headers, carrier assemblies, tracks, operating brackets, and guides level and true to location with anchorage for permanent support.

C. Door Operators: Connect door operators to electrical power distribution system as specified in Division 26 Sections

D. Sealants: Comply with requirements specified in Division 07 Section "Joint Sealants" to provide seal between the operator housing and wall surface. installation.

E. Signage: Apply signage on both sides of each door and each sidelight as required by ANSI/BHMA A 156.19

3.3 FIELD QUALITY CONTROL

A. Manufacturer’s representative shall provide technical assistance and guidance for installation of automatic doors.
   1. Factory trained and AAADM certified representative shall test and inspect each automatic door to determine compliance of the installed system to ANSI/BHMA A 156.19

3.4 ADJUSTING

A. Adjust door operators and controls for smooth and safe operation.

3.5 CLEANING AND PROTECTION

A. Clean adjacent surfaces soiled by automatic operator installation promptly after installation .

3.6 DEMONSTRATION

A. Engage a factory authorized representative to train Owner's maintenance personnel to adjust, operate, and maintain safe operation of automatic entrances.

END OF SECTION

This page intentionally left blank.

SECTION 08 80 00

GLAZING

PART 1 - GENERAL

1.1 SUMMARY

A. Section includes:

1. Glass for windows, doors, storefront framing, glazed curtain walls.
2. Glazing sealants and accessories.

1.2 COORDINATION

A. Coordinate glazing channel dimensions to provide necessary bite on glass, minimum edge and face clearances, and adequate sealant thicknesses, with reasonable tolerances.

1.3 ACTION SUBMITTALS

A. Product Data: For each type of product.

B. Glass Samples: For each type of glass product other than clear monolithic vision glass; 12 inches (300 mm) square.

C. Glazing Schedule: List glass types and thicknesses for each size opening and location. Use same designations indicated on Drawings.

1.4 INFORMATIONAL SUBMITTALS

A. Preconstruction adhesion and compatibility test report.

1.5 QUALITY ASSURANCE

A. Sealant Testing Agency Qualifications: An independent testing agency qualified according to ASTM C 1021 to conduct the testing indicated.

1.6 PRECONSTRUCTION TESTING

A. Preconstruction Adhesion and Compatibility Testing: Test each glass product, tape sealant, gasket, glazing accessory, and glass-framing member for adhesion to and compatibility with elastomeric glazing sealants.

1. Testing is not required if data are submitted based on previous testing of current sealant products and glazing materials matching those submitted.

1.7 WARRANTY

A. Manufacturer's Special Warranty for Coated-Glass Products: Manufacturer agrees to replace coated-glass units that deteriorate within specified warranty period. Deterioration of coated glass is defined as defects developed from normal use that are not attributed to glass breakage or to maintaining and cleaning coated glass contrary to manufacturer's written instructions. Defects include peeling, cracking, and other indications of deterioration in coating.

1. Warranty Period: 10 years from date of Substantial Completion.

B. Manufacturer's Special Warranty for Laminated Glass: Manufacturer agrees to replace laminated-glass units that deteriorate within specified warranty period. Deterioration of laminated glass is defined as defects developed from normal use that are not attributed to glass breakage or to maintaining and cleaning laminated glass contrary to manufacturer's written instructions. Defects include edge separation, delamination materially obstructing vision through glass, and blemishes exceeding those allowed by referenced laminated-glass standard.

1. Warranty Period: 10 years from date of Substantial Completion.

C. Manufacturer's Special Warranty for Insulating Glass: Manufacturer agrees to replace insulating-glass units that deteriorate within specified warranty period. Deterioration of insulating glass is defined as failure of hermetic seal under normal use that is not attributed to glass breakage or to maintaining and cleaning insulating glass contrary to manufacturer's written instructions. Evidence of failure is the obstruction of vision by dust, moisture, or film on interior surfaces of glass.

1. Warranty Period: 10 years from date of Substantial Completion.

PART 2 - PRODUCTS

2.1 MANUFACTURERS

1. AGC Glass Company
2. Cardinal Glass Industries
3. Cristancurva
4. Dlubak Corporation
5. Gardner Glass, Inc.
6. General Glass International
7. Glasswerks LA, Inc.
8. Glaz-Tech Industries
9. Guardian Glass: Sunguard
10. Hartung Glass Industries
11. J.E. Berkowitz
12. Northwestern Industries
13. Oldcastle Building Envelope
14. Pilkington North America
15. Schott North America, Inc.
16. Tecnolgass
17. Trulite Glass & Aluminum
18. Viracon, Inc.
19. Vitro Architectural Glass
20. Approved equal.

2.2 PERFORMANCE REQUIREMENTS

A. Delegated Design: Engage a qualified professional engineer, as defined in Section 014000 "Quality Requirements," to design glazing.

B. Structural Performance: Glazing shall withstand the following design loads within limits and under conditions indicated determined according to the International Building Code and ASTM E 1300.

1. Design Wind Pressures: 115 mph.

2. Design Snow Loads: 25 psf.
3. Thickness of Patterned Glass: Base design of patterned glass on thickness at thinnest part of the glass.

4. Differential Shading: Design glass to resist thermal stresses induced by differential shading within individual glass lites.

C. Safety Glazing: Where safety glazing is indicated, provide glazing that complies with 16 CFR 1201, Category II.

D. Thermal and Optical Performance Properties: Provide glass with performance properties specified, as indicated in manufacturer's published test data, based on procedures indicated below:

1. U-Factors: Center-of-glazing values, according to NFRC 100 and based on LBL's WINDOW 5.2 computer program, expressed as Btu/sq. ft. x h x deg F (W/sq. m x K).
2. Solar Heat-Gain Coefficient and Visible Transmittance: Center-of-glazing values, according to NFRC 200 and based on LBL's WINDOW 5.2 computer program.
3. Visible Reflectance: Center-of-glazing values, according to NFRC 300.

2.3 GLASS PRODUCTS, GENERAL

A. Glazing Publications: Comply with published recommendations of glass product manufacturers and organizations below unless more stringent requirements are indicated. See these publications for glazing terms not otherwise defined in this Section or in referenced standards.

1. GANA Publications: “Glazing Manual."
2. AAMA Publications: AAMA GDSG-1, "Glass Design for Sloped Glazing," and AAMA TIR A7, "Sloped Glazing Guidelines."
3. IGMA Publication for Sloped Glazing: IGMA TB-3001, "Guidelines for Sloped Glazing."
4. IGMA Publication for Insulating Glass: SIGMA TM-3000, "North American Glazing Guidelines for Sealed Insulating Glass Units for Commercial and Residential Use."

B. Safety Glazing Labeling: Where safety glazing is indicated, permanently mark glazing with certification label of manufacturer. Label shall indicate manufacturer's name, type of glass, thickness, and safety glazing standard with which glass complies.

C. Insulating-Glass Certification Program: Permanently marked either on spacers or on at least one component lite of units with appropriate certification label of IGCC.

D. Thickness: Where glass thickness is indicated, it is a minimum. Provide glass that complies with performance requirements and is not less than the thickness indicated.

E. Strength: Where annealed float glass is indicated, provide annealed float glass, heat-strengthened float glass, or fully tempered float glass. Where heat-strengthened float glass is indicated, provide heat-strengthened float glass or fully tempered float glass. Where fully tempered float glass is indicated, provide fully tempered float glass.

2.4 GLASS PRODUCTS

A. Tinted Annealed Float Glass: ASTM C 1036, Type I, Class 2 (tinted), Quality-Q3.

B. Fully Tempered Float Glass: ASTM C 1048, Kind FT (fully tempered), Condition A (uncoated) unless otherwise indicated, Type I, Class 1 (clear) or Class 2 (tinted) as indicated, Quality-Q3.

2.5 INSULATING GLASS

A. Insulating-Glass Units: Factory-assembled units consisting of sealed lites of glass separated by a dehydrated interspace, qualified according to ASTM E 2190.

1. Sealing System: Dual seals.

2. Spacer: Manufacturer's standard spacer material and construction.

B. INSULATING GLASS VISION UNITS:

1. Glass Type: [GL 1): Low E Coated Insulating Glass. Basis of Design Vitro Solarban 60 Solargray

a. Outboard Lite
   1) Glass Type: Solarban 60 Surface #2
   2) Glass Tint: Solargray
   3) Nominal Glass Thickness: 6 mm (1/4 inch)
   3) Glass Strength: Tempered

b. Airspace
   1) Nominal Thickness: 6 mm (1/4 inch)

c. Inboard Lite
   1) Glass Type: Clear
   2) Glass Tint: Clear
   3) Nominal Glass Thickness: 6 mm (1/4 inch)
   4) Glass Strength: Tempered

2. Performance Characteristics (Center of Glass):
(Note: Verify that the glass type thickness matches the Performance Characteristics listed below.)

a. Visible Transmittance: 35%
b. Visible Reflectance: 6%
c. Winter U-value: .29
d. Solar Heat Gain Coefficient (SHGC): .25
e. Light to Solar Gain (LSG): 1.40

3. Sealing System: Glass Enterprises standard hermetically sealed IG units with dehydrated airspace, dual air seal of black polyisobutylene (PIB), and a secondary seal of black silicone
4. Spacer: Aluminum with black, color anodic finish
5. Desiccant: Molecular sieve or silica gel, or blend of both
6. Corner Construction: Glass Enterprises standard
7. United States Requirements
   a. Insulating glass units are certified through the Insulating Glass Certification Council (IGCC) to ASTM E2190.

2.6 GLAZING SEALANTS

A. General:

1. Compatibility: Compatible with one another and with other materials they contact, including glass products, seals of insulating-glass units, and glazing channel substrates, under conditions of service and application, as demonstrated by sealant manufacturer based on testing and field experience.
2. Suitability: Comply with sealant and glass manufacturers' written instructions for selecting glazing sealants suitable for applications indicated and for conditions existing at time of installation.

3. Field-applied sealants shall have a VOC content of not more than 250 g/L.

4. Sealants shall comply with the testing and product requirements of the California Department of Public Health's (formerly, the California Department of Health Services') "Standard Method for the Testing and Evaluation of Volatile Organic Chemical Emissions from Indoor Sources Using Environmental Chambers."
5. Colors of Exposed Glazing Sealants: As indicated by manufacturer's designations.

2.7 GLAZING TAPES

A. Back-Bedding Mastic Glazing Tapes: Preformed, butyl-based, 100 percent solids elastomeric tape; nonstaining and nonmigrating in contact with nonporous surfaces; with or without spacer rod as recommended in writing by tape and glass manufacturers for application indicated; and complying with ASTM C 1281 and AAMA 800 for products indicated below:

1. AAMA 804.3 tape, where indicated.
2. AAMA 806.3 tape, for glazing applications in which tape is subject to continuous pressure.
3. AAMA 807.3 tape, for glazing applications in which tape is not subject to continuous pressure.

B. Expanded Cellular Glazing Tapes: Closed-cell, PVC foam tapes; factory coated with adhesive on both surfaces; and complying with AAMA 800 for the following types:

1. AAMA 810.1, Type 1, for glazing applications in which tape acts as the primary sealant.
2. AAMA 810.1, Type 2, for glazing applications in which tape is used in combination with a full bead of liquid sealant.

2.8 MISCELLANEOUS GLAZING MATERIALS

A. Cleaners, Primers, and Sealers: Types recommended by sealant or gasket manufacturer.

B. Setting Blocks: Elastomeric material with a Shore, Type A durometer hardness of 85, plus or minus 5.

C. Spacers: Elastomeric blocks or continuous extrusions of hardness required by glass manufacturer to maintain glass lites in place for installation indicated.

D. Edge Blocks: Elastomeric material of hardness needed to limit glass lateral movement (side walking).

E. Cylindrical Glazing Sealant Backing: ASTM C 1330, Type O (open-cell material), of size and density to control glazing sealant depth and otherwise produce optimum glazing sealant performance.

PART 3 - EXECUTION

3.1 GLAZING, GENERAL

A. Comply with combined written instructions of manufacturers of glass, sealants, gaskets, and other glazing materials, unless more stringent requirements are indicated, including those in referenced glazing publications.

B. Protect glass edges from damage during handling and installation. Remove damaged glass from Project site and legally dispose of off Project site. Damaged glass includes glass with edge damage or other imperfections that, when installed, could weaken glass, impair performance, or impair appearance.

C. Apply primers to joint surfaces where required for adhesion of sealants, as determined by preconstruction testing.

D. Install setting blocks in sill rabbets, sized and located to comply with referenced glazing publications, unless otherwise required by glass manufacturer. Set blocks in thin course of compatible sealant suitable for heel bead.

E. Do not exceed edge pressures stipulated by glass manufacturers for installing glass lites.

F. Provide spacers for glass lites where length plus width is larger than 50 inches (1270 mm).

G. Provide edge blocking where indicated or needed to prevent glass lites from moving sideways in glazing channel, as recommended in writing by glass manufacturer and according to requirements in referenced glazing publications.

3.2 TAPE GLAZING

A. Position tapes on fixed stops so that, when compressed by glass, their exposed edges are flush with or protrude slightly above sightline of stops.

B. Install tapes continuously, but not necessarily in one continuous length. Do not stretch tapes to make them fit opening.

C. Cover vertical framing joints by applying tapes to heads and sills first, then to jambs. Cover horizontal framing joints by applying tapes to jambs, then to heads and sills.

D. Place joints in tapes at corners of opening with adjoining lengths butted together, not lapped. Seal joints in tapes with compatible sealant approved by tape manufacturer.

E. Apply heel bead of elastomeric sealant.

F. Center glass lites in openings on setting blocks, and press firmly against tape by inserting dense compression gaskets formed and installed to lock in place against faces of removable stops. Start gasket applications at corners and work toward centers of openings.

G. Apply cap bead of elastomeric sealant over exposed edge of tape.

3.3 GASKET GLAZING (DRY)

A. Cut compression gaskets to lengths recommended by gasket manufacturer to fit openings exactly, with allowance for stretch during installation.

B. Insert soft compression gasket between glass and frame or fixed stop so it is securely in place with joints miter cut and bonded together at corners.

C. Installation with Drive-in Wedge Gaskets: Center glass lites in openings on setting blocks, and press firmly against soft compression gasket by inserting dense compression gaskets formed and installed to lock in place against faces of removable stops. Start gasket applications at corners and work toward centers of openings. Compress gaskets to produce a weathertight seal without developing bending stresses in glass. Seal gasket joints with sealant recommended by gasket manufacturer.

D. Installation with Pressure-Glazing Stops: Center glass lites in openings on setting blocks, and press firmly against soft compression gasket. Install dense compression gaskets and pressure-glazing stops, applying pressure uniformly to compression gaskets. Compress gaskets to produce a weathertight seal without developing bending stresses in glass. Seal gasket joints with sealant recommended by gasket manufacturer.

E. Install gaskets so they protrude past face of glazing stops.

3.4 SEALANT GLAZING (WET)

A. Install continuous spacers, or spacers combined with cylindrical sealant backing, between glass lites and glazing stops to maintain glass face clearances and to prevent sealant from extruding into glass channel and blocking weep systems until sealants cure. Secure spacers or spacers and backings in place and in position to control depth of installed sealant relative to edge clearance for optimum sealant performance.

B. Force sealants into glazing channels to eliminate voids and to ensure complete wetting or bond of sealant to glass and channel surfaces.

C. Tool exposed surfaces of sealants to provide a substantial wash away from glass.

3.5 CLEANING AND PROTECTION

A. Immediately after installation remove nonpermanent labels and clean surfaces.

B. Protect glass from contact with contaminating substances resulting from construction operations. Examine glass surfaces adjacent to or below exterior concrete and other masonry surfaces at frequent intervals during construction, but not less than once a month, for buildup of dirt, scum, alkaline deposits, or stains.

1. If, despite such protection, contaminating substances do come into contact with glass, remove substances immediately as recommended in writing by glass manufacturer. Remove and replace glass that cannot be cleaned without damage to coatings.

C. Remove and replace glass that is damaged during construction period.

END OF SECTION

SECTION 09 21 16

GYPSUM BOARD ASSEMBLIES

PART 1 GENERAL

1.01 SECTION INCLUDES

A. Metal stud wall framing.

B. Gypsum wallboard.

C. Joint treatment and accessories.

1.02 RELATED REQUIREMENTS

A. Section 06 10 00 - Rough Carpentry: Wood blocking product and execution requirements.

B. Section 07 92 00 - Joint Sealants: Sealing acoustical gaps in construction other than gypsum board or plaster work.

1.03 REFERENCE STANDARDS

A. ASTM C645 - Standard Specification for Nonstructural Steel Framing Members 2018.

B. ASTM C754 - Standard Specification for Installation of Steel Framing Members to Receive Screw-Attached Gypsum Panel Products 2020.

C. ASTM C840 - Standard Specification for Application and Finishing of Gypsum Board 2020.

D. ASTM C954 - Standard Specification for Steel Drill Screws for the Application of Gypsum Panel Products or Metal Plaster Bases to Steel Studs From 0.033 in. (0.84 mm) to 0.112 in. (2.84 mm) in Thickness 2018.

E. ASTM C1047 - Standard Specification for Accessories For Gypsum Wallboard and Gypsum Veneer Base 2019.

F. ASTM C1396/C1396M - Standard Specification for Gypsum Board 2017.

G. GA-216 - Application and Finishing of Gypsum Panel Products 2018.

1.04 SUBMITTALS

A. See Section 01 33 23 – Shop Drawings, Product Data and Samples.

B. Product Data: Provide data on metal framing, gypsum board, accessories, and joint finishing system.

PART 2 PRODUCTS

2.01 METAL FRAMING MATERIALS

A. Manufacturers - Metal Framing, Connectors, and Accessories:
   1. ClarkDietrich: www.clarkdietrich.com.
   2. Steel Construction Systems: www.steelconsystems.com.
   3. Supreme Steel Framing System Association; Supreme Stud: www.ssfsa.com.

B. Non-structural Framing System Components: ASTM C645; galvanized sheet steel, of size and properties necessary to comply with ASTM C754 for the spacing indicated, with maximum deflection of wall framing of L/120 at 5 psf (L/120 at 240 Pa).
   1. Studs: C-shaped with knurled or embossed faces.
   2. Runners: U shaped, sized to match studs.

2.02 BOARD MATERIALS

A. Manufacturers - Gypsum-Based Board:
   1. CertainTeed Corporation: www.certainteed.com.
   2. National Gypsum Company: www.nationalgypsum.com.
   3. USG Corporation: www.usg.com.

B. Gypsum Wallboard: Paper-faced gypsum panels as defined in ASTM C1396/C1396M; sizes to minimize joints in place; ends square cut.
   1. Application: Use for vertical surfaces and ceilings, unless otherwise indicated.
   2. Thickness:
      a. Vertical Surfaces: 5/8 inch (16 mm).

2.03 Gypsum Wallboard ACCESSORIES

A. Beads, Joint Accessories, and Other Trim: ASTM C1047, rigid plastic, galvanized steel, or rolled zinc, unless noted otherwise.
   1. L-Trim with Tear-Away Strip: Sized to fit 1/2 inch (13 mm) thick gypsum wallboard.

B. Screws for Fastening of Gypsum Panel Products to Steel Members from 0.033 to 0.112 inch (0.84 to 2.84 mm) in Thickness: ASTM C954; steel drill screws, corrosion-resistant.

PART 3 EXECUTION

3.01 EXAMINATION

A. Verify that project conditions are appropriate for work of this section to commence.

3.02 FRAMING INSTALLATION

A. Metal Framing: Install in accordance with ASTM C754 and manufacturer's instructions.

B. Studs: Space studs at 16 inches on center (at 600 mm on center).
   1. Extend partition framing to structure in all locations.

3.03 BOARD INSTALLATION

A. Comply with ASTM C840, GA-216, and manufacturer's instructions. Install to minimize butt end joints, especially in highly visible locations.

3.04 INSTALLATION OF TRIM AND ACCESSORIES

A. Control Joints: Place control joints consistent with lines of building spaces and as indicated.

B. Corner Beads: Install at external corners, using longest practical lengths.

C. Edge Trim: Install at locations where gypsum board abuts dissimilar materials.

3.05 JOINT TREATMENT

A. Finish gypsum board in accordance with levels defined in ASTM C840, as follows:
   1. Level 4: Walls and ceilings to receive paint finish or wall coverings, unless otherwise indicated.

B. Tape, fill, and sand exposed joints, edges, and corners to produce smooth surface ready to receive finishes.
   1. Feather coats of joint compound so that camber is maximum 1/32 inch (0.8 mm).

END OF SECTION

SECTION 09 30 00
TILING

PART 1 GENERAL

1.01 SECTION INCLUDES

A. Tile for floor applications.

B. Stone thresholds.

1.02 REFERENCE STANDARDS

A. ANSI A108.1a - American National Standard Specifications for Installation of Ceramic Tile in the Wet-Set Method, with Portland Cement Mortar 2017.

B. ANSI A108.1b - American National Standard Specifications for Installation of Ceramic Tile on a Cured Portland Cement Mortar Setting Bed with Dry-Set or Latex-Portland Cement Mortar 2017.

C. ANSI A108.1c - Specifications for Contractors Option: Installation of Ceramic Tile in the Wet-Set Method with Portland Cement Mortar or Installation of Ceramic Tile on a Cured Portland Cement Mortar Bed with Dry-Set or Latex-Portland Cement 1999 (Reaffirmed 2016).

D. ANSI A108.2 - American National Standard General Requirements: Materials, Environmental and Workmanship 2019.

E. ANSI A108.4 - American National Standard Specifications for Installation of Ceramic Tile with Organic Adhesives or Water Cleanable Tile-Setting Epoxy Adhesive 2009 (Revised).

F. ANSI A108.5 - American National Standard Specifications for Installation of Ceramic Tile with Dry-Set Portland Cement Mortar or Latex-Portland Cement Mortar 1999 (Reaffirmed 2010).

G. ANSI A108.6 - American National Standard Specifications for Installation of Ceramic Tile with Chemical Resistant, Water Cleanable Tile-Setting and -Grouting Epoxy 1999 (Reaffirmed 2010).

H. ANSI A108.8 - American National Standard Specifications for Installation of Ceramic Tile with Chemical Resistant Furan Resin Mortar and Grout 1999 (Reaffirmed 2010).

I. ANSI A108.9 - American National Standard Specifications for Installation of Ceramic Tile with Modified Epoxy Emulsion Mortar/Grout 1999 (Reaffirmed 2010).

J. ANSI A108.10 - American National Standard Specifications for Installation of Grout in Tilework 2017.

K. ANSI A108.12 - American National Standard for Installation of Ceramic Tile with EGP (Exterior Glue Plywood) Latex-Portland Cement Mortar 1999 (Reaffirmed 2010).

L. ANSI A108.13 - American National Standard for Installation of Load Bearing, Bonded, Waterproof Membranes for Thin-Set Ceramic Tile and Dimension Stone 2005 (Reaffirmed 2016).

M. ANSI A108.19 - American National Standard Specifications for Interior Installation of Gauged Porcelain Tiles and Gauged Porcelain Tile Panels/Slabs by the Thin-Bed Method Bonded with Modified Dry-Set Cement Mortar or Improved Modified Dry-Set Cement Mortar 2020.

N. ANSI A118.6 - American National Standard Specifications for Standard Cement Grouts for Tile Installation 2010 (Reaffirmed 2016).

O. ANSI A118.10 - American National Standard Specifications for Load Bearing, Bonded, Waterproof Membranes For Thin-Set Ceramic Tile And Dimension Stone Installation 2014.

P. ANSI A118.12 - American National Standard Specifications for Crack Isolation Membranes for Thin-Set Ceramic Tile and Dimension Stone Installation 2014.

Q. ANSI A137.1 - American National Standard Specifications for Ceramic Tile 2019.

R. ASTM C373 - Standard Test Methods for Determination of Water Absorption and Associated Properties by Vacuum Method for Pressed Ceramic Tiles and Glass Tiles and Boil Method for Extruded Ceramic Tiles and Non-tile Fired Ceramic Whiteware Products 2018.

S. TCNA (HB) - Handbook for Ceramic, Glass, and Stone Tile Installation 2019.

1.03 SUBMITTALS

A. Product Data: Provide manufacturers' data sheets on tile, mortar, grout, and accessories. Include instructions for using grouts and adhesives.

B. Samples: Mount tile and apply grout on two plywood panels, minimum 18 by 18 inches (457 by 457 mm) in size illustrating pattern, color variations, and grout joint size variations.

C. Maintenance Data: Include recommended cleaning methods, cleaning materials, and stain removal methods.

1.04 QUALITY ASSURANCE

A. Installer Qualifications:
   1. Company specializing in performing tile installation, with minimum of five years of documented experience.

1.05 DELIVERY, STORAGE, AND HANDLING

A. Protect adhesives from freezing or overheating in accordance with manufacturer's instructions.

1.06 FIELD CONDITIONS

A. Do not install solvent-based products in an unventilated environment.

B. Maintain ambient and substrate temperature above 50 degrees F (10 degrees C) and below 100 degrees F (38 degrees C) during installation and curing of setting materials.

PART 2 PRODUCTS

2.01 TILE

A. Manufacturers: All products by the same manufacturer.
   1. Dal-Tile Corporation: www.daltile.com/#sle.
   2. Approved equal.

B. Porcelain Tile: ANSI A137.1 standard grade.
   1. Moisture Absorption: 0 to 0.5 percent as tested in accordance with ASTM C373.
   2. Size: 12 by 12 inch, nominal.
   3. Thickness: 3/8 inch (9.5 mm).
   4. Color(s): Electric Moss VL79.
   5. Trim Units: Matching bullnose, double bullnose, cove base, and cove shapes in sizes coordinated with field tile.

2.02 TRIM AND ACCESSORIES

A. Thresholds: 2 inches (51 mm) wide by full width of wall or frame opening; beveled edge on both long edges; without holes, cracks, or open seams.
   1. Thickness: 1/2 inch (12.7 mm).
   2. Material: Marble, honed finish.
   3. Color and Pattern: match existing.
   4. Applications:
      a. At doorways where tile terminates.

2.03 SETTING MATERIALS

A. Provide setting and grout materials from same manufacturer.

B. Manufacturers:
   1. ARDEX Engineered Cements: www.ardexamericas.com.
   2. Bostik Inc: www.bostik-us.com.
   3. LATICRETE International, Inc: www.laticrete.com.

C. Mortar Bed Materials: Pre-packaged mix of Portland cement, sand, latex additive, and water.

2.04 GROUTS

A. Provide setting and grout materials from same manufacturer.

B. Standard Grout: ANSI A118.6 standard cement grout.
   1. Applications: Use this type of grout where indicated and where no other type of grout is indicated.

2. Use sanded grout for joints 1/8 inch (3.2 mm) wide and larger; use unsanded grout for joints less than 1/8 inch (3.2 mm) wide.
3. Color(s): Pewter 5002.

2.05 ACCESSORY MATERIALS

A. Waterproofing Membrane at Floors: Specifically designed for bonding to cementitious substrate under thick mortar bed or thin-set tile; complying with ANSI A118.10.
   1. Crack Resistance: No failure at 1/16 inch (1.6 mm) gap, minimum; comply with ANSI A118.12.
   2. Fluid or Trowel Applied Type:
      a. Material: Synthetic rubber or Acrylic.
      b. Thickness: 25 mils (0.6 mm), minimum, dry film thickness.

PART 3 EXECUTION

3.01 EXAMINATION

A. Verify that subfloor surfaces are smooth and flat within the tolerances specified for that type of work and are ready to receive tile.

B. Verify that subfloor surfaces are dust free and free of substances that could impair bonding of setting materials to subfloor surfaces.

3.02 PREPARATION

A. Protect surrounding work from damage.

B. Vacuum clean surfaces and damp clean.

C. Seal substrate surface cracks with filler. Level existing substrate surfaces to acceptable flatness tolerances.

3.03 INSTALLATION - GENERAL

A. Install tile, thresholds, and stair treads and grout in accordance with applicable requirements of ANSI A108.1a through ANSI A108.19, manufacturer's instructions, and TCNA (HB) recommendations.

B. Lay tile to pattern indicated. Do not interrupt tile pattern through openings.

C. Cut and fit tile to penetrations through tile, leaving sealant joint space. Form corners and bases neatly. Align floor joints.

D. Place tile joints uniform in width, subject to variance in tolerance allowed in tile size. Make grout joints without voids, cracks, excess mortar or excess grout, or too little grout.

E. Form internal angles square and external angles bullnosed.

F. Install thresholds where indicated.

G. Sound tile after setting. Replace hollow sounding units.

H. Keep control and expansion joints free of mortar, grout, and adhesive.

I. Prior to grouting, allow installation to completely cure; minimum of 48 hours.

J. Grout tile joints unless otherwise indicated. Use standard grout unless otherwise indicated.

K. At changes in plane and tile-to-tile control joints, use tile sealant instead of grout, with either bond breaker tape or backer rod as appropriate to prevent three-sided bonding.

3.04 INSTALLATION - FLOORS - THIN-SET METHODS

A. Over interior concrete substrates, install in accordance with TCNA (HB) Method F113, dry-set or latex-Portland cement bond coat, with standard grout, unless otherwise indicated.
   1. Where waterproofing membrane is indicated, install in accordance with TCNA (HB) Method F122, with latex-Portland cement grout.

3.05 CLEANING

A. Clean tile and grout surfaces.

3.06 PROTECTION

A. Do not permit traffic over finished floor surface for 4 days after installation.

END OF SECTION

This page intentionally left blank.

SECTION 09 51 00

ACOUSTICAL CEILINGS

PART 1 GENERAL

1.01 SECTION INCLUDES

A. Suspended metal grid ceiling system.

B. Acoustical units.

1.02 REFERENCE STANDARDS

A. ASTM B209 - Standard Specification for Aluminum and Aluminum-Alloy Sheet and Plate 2014.

B. ASTM B209M - Standard Specification for Aluminum and Aluminum-Alloy Sheet and Plate (Metric) 2014.

C. ASTM C635/C635M - Standard Specification for the Manufacture, Performance, and Testing of Metal Suspension Systems for Acoustical Tile and Lay-in Panel Ceilings 2017.

D. ASTM E1264 - Standard Classification for Acoustical Ceiling Products 2019.

1.03 SUBMITTALS

A. See Section 01 33 23 – Shop Drawings, Product Data and Samples.

B. Product Data: Provide data on suspension system components and acoustical units.

PART 2 PRODUCTS

2.01 MANUFACTURERS

A. Acoustic Tiles/Panels:
1. Basis of Design manufacturer/product: Armstrong World Industries, Inc., www.armstrongceilings.com. School Zone Fine Fissured;1713.
2. CertainTeed Corporation: www.certainteed.com.
3. USG Corporation: www.usg.com/ceilings.
4. Approved equal.

B. Suspension Systems:
1. Same as for acoustical units.

2.02 ACOUSTICAL UNITS

A. Acoustical Units - General: ASTM E1264, Class A.

B. Acoustical Tiles: Painted mineral fiber, with the following characteristics:
   1. Classification: ASTM E1264 Type III.
   2. Size: 24 by 24 inches (610 by 610 mm).
   3. Thickness: 3/4 inch (19 mm).
   4. Tile Edge: Square.
      a. Joint: Kerfed and rabbeted.
   5. Suspension System: Exposed grid.

2.03 SUSPENSION SYSTEM(S)

A. Metal Suspension Systems - General: Complying with ASTM C635/C635M; die cut and interlocking components, with perimeter moldings, hold down clips, stabilizer bars, clips, and splices as required.
   1. Materials:
      a. Aluminum Grid: Aluminum sheet, ASTM B209 (ASTM B209M).
      b. Color: White.

2.04 ACCESSORIES

A. Support Channels and Hangers: Galvanized steel; size and type to suit application, seismic requirements, and ceiling system flatness requirement specified.

B. Hanger Wire: 12 gauge, 0.08 inch (2 mm) galvanized steel wire.

C. Perimeter Moldings: Same metal and finish as grid.

PART 3 EXECUTION

3.01 EXAMINATION

A. Verify existing conditions before starting work.

B. Verify that layout of hangers will not interfere with other work.

3.02 Preparation

A. Install after major above-ceiling work is complete.

B. Coordinate the location of hangers with other work.

3.03 INSTALLATION - SUSPENSION SYSTEM

A. Rigidly secure system, including integral mechanical and electrical components, for maximum deflection of 1:360.

B. Perimeter Molding: Install at intersection of ceiling and vertical surfaces and at junctions with other interruptions.
   1. Use longest practical lengths.

C. Suspension System, Non-Seismic: Hang suspension system independent of walls, columns, ducts, pipes and conduit. Where carrying members are spliced, avoid visible displacement of face plane of adjacent members.

D. Where ducts or other equipment prevent the regular spacing of hangers, reinforce the nearest affected hangers and related carrying channels to span the extra distance.

E. Do not support components on main runners or cross runners if weight causes total dead load to exceed deflection capability.

F. Support fixture loads using supplementary hangers located within 6 inches (152 mm) of each corner, or support components independently.

G. Do not eccentrically load system or induce rotation of runners.

3.04 INSTALLATION - ACOUSTICAL UNITS

A. Install acoustical units in accordance with manufacturer's instructions.

B. Fit acoustical units in place, free from damaged edges or other defects detrimental to appearance and function.

C. Fit border trim neatly against abutting surfaces.

D. Install acoustical units level, in uniform plane, and free from twist, warp, and dents.

E. Cutting Acoustical Units:
   1. Make field cut edges of same profile as factory edges.

END OF SECTION

This page intentionally left blank.

SECTION 09 65 19

RESILIENT TILE FLOORING

PART 1 - GENERAL

1.1 RELATED DOCUMENTS

A. Drawings and general provisions of the Contract, including General and Special Conditions and Division 01 Specification Sections, apply to this Section.

1.2 SUMMARY

A. This Section includes the following:

1. Luxury Vinyl tile.
2. Resilient wall base and accessories.

1.3 SUBMITTALS

A. Product Data: For each type of product specified.

B. Samples for Initial Selection: Manufacturer's color charts consisting of units or sections of units showing the full range of colors and patterns available for each type of product indicated.

C. Maintenance Data: For resilient floor tile to include in the maintenance manuals specified in Division 01.

1.4 QUALITY ASSURANCE

A. Installer Qualifications: Engage an experienced installer to perform work of this Section who has specialized in installing resilient products similar to those required for this Project and with a record of successful in-service performance.

B. Source Limitations: Obtain each type, color, and pattern of product specified from one source with resources to provide products of consistent quality in appearance and physical properties without delaying the Work.

C. Fire-Test-Response Characteristics: Provide products with the following fire-test-response characteristics as determined by testing identical products per test method indicated below by a testing and inspecting agency acceptable to authorities having jurisdiction.

1. Critical Radiant Flux: 0.45 W/sq. cm or greater when tested per ASTM E 648.
2. Smoke Density: Maximum specific optical density of 450 or less when tested per ASTM E 662.

1.5 DELIVERY, STORAGE, AND HANDLING

A. Deliver products to Project site in manufacturer's original, unopened cartons and containers, each bearing names of product and manufacturer, Project identification, and shipping and handling instructions.

B. Store products in dry spaces protected from the weather, with ambient temperatures maintained between 50 and 90 deg F (10 and 32 deg C).

C. Store tiles on flat surfaces.

D. Move products into spaces where they will be installed at least 48 hours before installation, unless longer conditioning period is recommended in writing by manufacturer.

1.6 PROJECT CONDITIONS

A. Maintain a temperature of not less than 70 deg F (21 deg C) or more than 95 deg F (35 deg C) in spaces to receive products for at least 48 hours before installation, during installation, and for at least 48 hours after installation, unless manufacturer's written recommendations specify longer time periods. After post-installation period, maintain a temperature of not less than 55 deg F (13 deg C) or more than 95 deg F (35 deg C).

B. Do not install products until they are at the same temperature as the space where they are to be installed.

C. Close spaces to traffic during flooring installation and for time period after installation recommended in writing by manufacturer.

D. Install tiles and accessories after other finishing operations, including painting, have been completed.

E. Where demountable partitions and other items are indicated for installation on top of resilient tile flooring, install tile before these items are installed.

F. Do not install flooring over concrete slabs until slabs have cured and are sufficiently dry to bond with adhesive, as determined by flooring manufacturer's recommended bond and moisture test.

1.7 EXTRA MATERIALS

A. Furnish extra materials described below that match products installed, are packaged with protective covering for storage, and are identified with labels describing contents.

1. Furnish not less than one box and one additional for each 50 boxes or fraction thereof, of each type, color, pattern, class, wearing surface, and size of resilient tile flooring installed.

2. Furnish not less than 10 linear feet (3 linear m) and 10 additional for each 500 linear feet (150 linear m) or fraction thereof, of each type, color, pattern, and size of resilient accessory installed.
3. Deliver extra materials to Owner.

PART 2 - PRODUCTS

2.1 LUXURY VINYL TILE (LVT)

A. Manufacturers: Subject to compliance with requirements, products that may be incorporated into the Work include, but are not limited to the following:
   1. Shaw Contract, Patcraft (Basis-of-Design: Timber Grove II).
   2. Approved equal.
B. Tiles: ASTM F1700, Class III, printed film, vinyl tile, Type B embossed surface.
C. Thickness: 1/8 inch.
D. Wear Layer Thickness: 0.020 inch.
E. Size: 6 x 48
F. Color: Mooreland 00568-v4.

2.2 RESILIENT ACCESSORIES

A. Manufacturers: Subject to compliance with requirements, products that may be incorporated into the Work include, but are not limited to the following:
   1. Johnsonite, A Tarkett Company.
   2. Approved equal.
B. Vinyl Wall Base: Type TP, Group I.
C. Thickness: .125 inch.
D. Height: 6 inches.
E. Outside Corners: Preformed.
F. Inside Corners: Job formed.
G. Color: Navy Blue 18.

2.3 INSTALLATION ACCESSORIES

A. Trowelable Leveling and Patching Compounds: Latex-modified, portland-cement-based formulation provided or approved by flooring manufacturer for applications indicated.

B. Adhesives: Water-resistant type recommended by manufacturer to suit resilient products and substrate conditions indicated.

PART 3 - EXECUTION

3.1 EXAMINATION

A. Examine substrates, areas, and conditions where installation of resilient products will occur, with Installer present, for compliance with manufacturer's requirements. Verify that substrates and conditions are satisfactory for resilient product installation and comply with requirements specified.

B. Concrete Subfloors: Verify that concrete slabs comply with ASTM F 710 and the following:

1. Slab substrates are dry and free of curing compounds, sealers, hardeners, and other materials that may interfere with adhesive bond. Determine adhesion and dryness characteristics by performing bond and moisture tests recommended by flooring manufacturer.
2. Subfloor finishes comply with requirements specified in Division 3 Section "Cast-in-Place Concrete" for slabs receiving resilient flooring.
3. Subfloors are free of cracks, ridges, depressions, scale, and foreign deposits.

C. Do not proceed with installation until unsatisfactory conditions have been corrected.

3.2 PREPARATION

A. General: Comply with resilient product manufacturer's written installation instructions for preparing substrates indicated to receive resilient products.

B. Use trowelable leveling and patching compounds, according to manufacturer's written instructions, to fill cracks, holes, and depressions in substrates.

C. Remove coatings, including curing compounds, and other substances that are incompatible with flooring adhesives and that contain soap, wax, oil, or silicone, using mechanical methods recommended by manufacturer. Do not use solvents.

D. Broom and vacuum clean substrates to be covered immediately before product installation. After cleaning, examine substrates for moisture, alkaline salts, carbonation, or dust. Do not proceed with installation until unsatisfactory conditions have been corrected.

3.3 TILE INSTALLATION

A. General: Comply with tile manufacturer's written installation instructions.

B. Lay out tiles from center marks established with principal walls, discounting minor offsets, so tiles at opposite edges of room are of equal width. Adjust as necessary to avoid using cut widths that equal less than one-half of a tile at perimeter.

1. Lay tiles square with room axis, unless otherwise indicated.

C. Match tiles for color and pattern by selecting tiles from cartons in the same sequence as manufactured and packaged, if so numbered. Cut tiles neatly around all fixtures. Discard broken, cracked, chipped, or deformed tiles.

1. Lay tiles with grain running in one direction.

D. Scribe, cut, and fit tiles to butt neatly and tightly to vertical surfaces and permanent fixtures, including built-in furniture, cabinets, pipes, outlets, edgings, door frames, thresholds, and nosings.

E. Extend tiles into toe spaces, door reveals, closets, and similar openings.

F. Maintain reference markers, holes, and openings that are in place or marked for future cutting by repeating on finish flooring as marked on subfloor. Use chalk or other nonpermanent, nonstaining marking device.

G. Install tiles on covers for telephone and electrical ducts, and similar items in finished floor areas. Maintain overall continuity of color and pattern with pieces of flooring installed on covers. Tightly adhere edges to perimeter of floor around covers and to covers.

H. Adhere tiles to flooring substrates using a full spread of adhesive applied to substrate to comply with tile manufacturer's written instructions, including those for trowel notching, adhesive mixing, and adhesive open and working times.

1. Provide completed installation without open cracks, voids, raising and puckering at joints, telegraphing of adhesive spreader marks, and other surface imperfections.

I. Hand roll tiles according to tile manufacturer's written instructions.

3.4 RESILIENT ACCESSORY INSTALLATION

A. General: Install resilient accessories according to manufacturer's written installation instructions.

B. Apply resilient wall base to walls, columns, pilasters, casework and cabinets in toe spaces, and other permanent fixtures in rooms and areas where base is required.

1. Install wall base in lengths as long as practicable without gaps at seams and with tops of adjacent pieces aligned.
2. Tightly adhere wall base to substrate throughout length of each piece, with base in continuous contact with horizontal and vertical substrates.
3. Do not stretch base during installation.
4. On masonry surfaces or other similar irregular substrates, fill voids along top edge of resilient wall base with manufacturer's recommended adhesive filler material.
5. Install premolded outside and inside corners before installing straight pieces.

C. Place resilient accessories so they are butted to adjacent materials and bond to substrates with adhesive. Install reducer strips at edges of flooring that would otherwise be exposed.

D. Apply resilient products to stairs as indicated and according to manufacturer's written installation instructions.

3.5 CLEANING AND PROTECTING

A. Perform the following operations immediately after installing resilient products:

1. Remove adhesive and other surface blemishes using cleaner recommended by resilient product manufacturers.
2. Sweep or vacuum floor thoroughly.
3. Do not wash floor until after time period recommended by flooring manufacturer.
4. Damp-mop floor to remove marks and soil.

B. Protect flooring against mars, marks, indentations, and other damage from construction operations and placement of equipment and fixtures during the remainder of construction period. Use protection methods indicated or recommended in writing by flooring manufacturer.

1. Apply protective floor polish to floor surfaces that are free from soil, visible adhesive, and surface blemishes, if recommended in writing by manufacturer.

   a. Use commercially available product acceptable to flooring manufacturer.
   b. Coordinate selection of floor polish with Owner's maintenance service.

2. Cover products installed on floor surfaces with undyed, untreated building paper until inspection for Substantial Completion.
3. Do not move heavy and sharp objects directly over floor surfaces. Place plywood or hardboard panels over flooring and under objects while they are being moved. Slide or roll objects over panels without moving panels.

C. Clean floor surfaces not more than 4 days before dates scheduled for inspections intended to establish date of Substantial Completion in each area of Project. Clean products according to manufacturer's written recommendations.

1. Before cleaning, strip protective floor polish that was applied after completing installation only if required to restore polish finish and if recommended by flooring manufacturer.
2. After cleaning, reapply polish to floor surfaces to restore protective floor finish according to flooring manufacturer's written recommendations. Coordinate with Owner's maintenance program.

END OF SECTION

SECTION 09 68 13

TILE CARPETING

PART 1 GENERAL

1.01 SECTION INCLUDES

A. Carpet tile, fully adhered.

B. Removal of existing carpet tile.

1.02 REFERENCE STANDARDS

A. ASTM E648 - Standard Test Method for Critical Radiant Flux of Floor-Covering Systems Using a Radiant Heat Energy Source 2019a, with Editorial Revision (2020).

B. NFPA 253 - Standard Method of Test for Critical Radiant Flux of Floor Covering Systems Using a Radiant Heat Energy Source 2019.

1.03 SUBMITTALS

A. See Section 01 33 23 – Shop Drawings, Product Data and Samples.

B. Product Data: Provide data on specified products, describing physical and performance characteristics; sizes, patterns, colors available, and method of installation.

C. Samples: Submit two carpet tiles illustrating color and pattern design for each carpet color selected.

1.04 FIELD CONDITIONS

A. Store materials in area of installation for minimum period of 24 hours prior to installation.

PART 2 PRODUCTS

2.01 MANUFACTURERS

A. Tile Carpeting:
   1. Shaw Contract: www.shawcontract.com/en-us.
   2. Approved equal..

2.02 MATERIALS

A. Tile Carpeting: Tufted, manufactured in one color dye lot.
   1. Tile Size: 9"x 36", nominal.
   2. Color: 97429 Influenced Results .

3. Critical Radiant Flux: Minimum of 0.22 watts/sq cm, when tested in accordance with ASTM E648 or NFPA 253.
4. Gauge: [5/64] inch ([____] mm).
5. Stitches: 10 per inch ([____] per cm).
6. Pile Weight: 20 oz/sq yd ([____] gm/sq m).

PART 3 EXECUTION

3.01 EXAMINATION

A. Verify that subfloor surfaces are smooth and flat within tolerances specified for that type of work and are ready to receive carpet tile.

B. Verify that wall surfaces are smooth and flat within the tolerances specified for that type of work, are dust-free, and are ready to receive carpet tile.

C. Verify that subfloor surfaces are dust-free and free of substances that could impair bonding of adhesive materials to subfloor surfaces.

D. Cementitious Subfloor Surfaces: Verify that substrates are ready for flooring installation by testing for moisture and alkalinity (pH).
   1. Obtain instructions if test results are not within limits recommended by flooring material manufacturer and adhesive materials manufacturer.

3.02 PREPARATION

A. Remove existing carpet tile.

B. Prepare floor substrates as recommended by flooring and adhesive manufacturers.

3.03 INSTALLATION

A. Starting installation constitutes acceptance of subfloor conditions.

B. Install carpet tile in accordance with manufacturer's instructions.

C. Blend carpet from different cartons to ensure minimal variation in color match.

D. Cut carpet tile clean. Fit carpet tight to intersection with vertical surfaces without gaps.

E. Lay carpet tile in staggered installation pattern.

F. Trim carpet tile neatly at walls and around interruptions.

G. Complete installation of edge strips, concealing exposed edges.

3.04 CLEANING

A. Remove excess adhesive without damage, from floor, base, and wall surfaces.

B. Clean and vacuum carpet surfaces.

END OF SECTION

This page intentionally left blank.

SECTION 09 91 23

INTERIOR PAINTING

PART 1 GENERAL

1.01 REFERENCE STANDARDS

A. MPI (APSM) - Master Painters Institute Architectural Painting Specification Manual Current Edition.

B. SSPC-SP 1 - Solvent Cleaning 2015, with Editorial Revision (2016).

C. SSPC-SP 6 - Commercial Blast Cleaning 2007.

1.02 SUBMITTALS

A. See Section 01 33 23 – Shop Drawings, Product Data and Samples.

B. Product Data: Provide complete list of products to be used, with the following information for each:
   1. Manufacturer's name, product name and/or catalog number, and general product category (e.g., "alkyd enamel").
   2. MPI product number (e.g., MPI #47).
   3. Cross-reference to specified paint system(s) product is to be used in; include description of each system.

C. Samples: Submit two paper chip samples, 4x4 inch (____x____ mm) in size illustrating range of colors and textures available for each surface finishing product scheduled.

1.03 DELIVERY, STORAGE, AND HANDLING

A. Deliver products to site in sealed and labeled containers; inspect to verify acceptability.

B. Container Label: Include manufacturer's name, type of paint, brand name, lot number, brand code, coverage, surface preparation, drying time, cleanup requirements, color designation, and instructions for mixing and reducing.

C. Paint Materials: Store at minimum ambient temperature of 45 degrees F (7 degrees C) and a maximum of 90 degrees F (32 degrees C), in ventilated area, and as required by manufacturer's instructions.

1.04 FIELD CONDITIONS

A. Do not apply materials when surface and ambient temperatures are outside the temperature ranges required by the paint product manufacturer.

B. Follow manufacturer's recommended procedures for producing best results, including testing of substrates, moisture in substrates, and humidity and temperature limitations.

C. Provide lighting level of 80 ft candles (860 lx) measured mid-height at substrate surface.

PART 2 PRODUCTS

2.01 MANUFACTURERS

A. Paints:
   1. Sherwin -Williams Company: www.sherwin-williams.com.
   2. Approved equal.

B. Primer Sealers: Same manufacturer as top coats.

C. Basis-of-Design: Sherwin-Williams: Walls: #SW 6505 Atmospheric Blue. Frames: Color to match Navy Blue wall base.

2.02 PAINTS AND FINISHES - GENERAL

A. Paints and Finishes: Ready-mixed, unless intended to be a field-catalyzed paint.
   1. Provide paints and finishes of a soft paste consistency, capable of being readily and uniformly dispersed to a homogeneous coating, with good flow and brushing properties, and capable of drying or curing free of streaks or sags.
   2. Supply each paint material in quantity required to complete entire project's work from a single production run.
   3. Do not reduce, thin, or dilute paint or finishes or add materials unless such procedure is specifically described in manufacturer's product instructions.

2.03 PAINT SYSTEMS - INTERIOR

A. Paint I-OP - Interior Surfaces to be Painted, Unless Otherwise Indicated: Including gypsum board, concrete, concrete masonry units, brick, wood, plaster, uncoated steel, shop primed steel, galvanized steel, aluminum, and acoustical ceilings.
   1. Two top coats and one coat primer.
   2. Top Coat(s): Interior Latex; MPI #43, 44, 52, 53, 54, or 114.
   3. Top Coat Sheen:
      a. Semi-Gloss: MPI gloss level 5; use this sheen at all locations.
   4. Primer: As recommended by top coat manufacturer for specific substrate.

B. Paint I-OP-MD-DT - Medium Duty Door/Trim: For surfaces subject to frequent contact by occupants, including metals and wood:
   1. Medium duty applications include doors, door frames, railings, handrails, guardrails, and balustrades.
   2. Two top coats and one coat primer.
   3. Top Coat(s): High Performance Architectural Interior Latex; MPI #138, 139, 140, or 141.
   4. Top Coat Sheen:
      a. Eggshell: MPI gloss level 3; use this sheen at all locations.
   5. Primer: As recommended by top coat manufacturer for specific substrate.

2.04 PRIMERS

A. Primers: Provide the following unless other primer is required or recommended by manufacturer of top coats.
   1. Interior Institutional Low Odor/VOC Primer Sealer; MPI #149.
   2. Interior Latex Primer Sealer; MPI #50.
   3. Interior Drywall Primer Sealer.
   4. Interior Rust-Inhibitive Water Based Primer; MPI #107.
   5. Interior Water Based Primer for Galvanized Metal; MPI #134.

PART 3 EXECUTION

3.01 EXAMINATION

A. Do not begin application of paints and finishes until substrates have been adequately prepared.

B. Verify that surfaces are ready to receive work as instructed by the product manufacturer.

C. Examine surfaces scheduled to be finished prior to commencement of work. Report any condition that may potentially affect proper application.

3.02 PREPARATION

A. Clean surfaces thoroughly and correct defects prior to application.

B. Prepare surfaces using the methods recommended by the manufacturer for achieving the best result for the substrate under the project conditions.

C. Remove or mask surface appurtenances, including electrical plates, hardware, light fixture trim, escutcheons, and fittings, prior to preparing surfaces or finishing.

D. Seal surfaces that might cause bleed through or staining of topcoat.

E. Gypsum Board: Fill minor defects with filler compound. Spot prime defects after repair.

F. Galvanized Surfaces:

G. Ferrous Metal:
   1. Solvent clean according to SSPC-SP 1.
   2. Shop-Primed Surfaces: Sand and scrape to remove loose primer and rust. Feather edges to make touch-up patches inconspicuous. Clean surfaces with solvent. Prime bare steel surfaces. Re-prime entire shop-primed item.
   3. Remove rust, loose mill scale, and other foreign substances using using methods recommended in writing by paint manufacturer and blast cleaning according to SSPC-SP 6 "Commercial Blast Cleaning". Protect from corrosion until coated.

3.03 APPLICATION

A. Apply products in accordance with manufacturer's written instructions and recommendations in "MPI Architectural Painting Specification Manual".

B. Do not apply finishes to surfaces that are not dry. Allow applied coats to dry before next coat is applied.

C. Apply each coat to uniform appearance in thicknesses specified by manufacturer.

D. Vacuum clean surfaces of loose particles. Use tack cloth to remove dust and particles just prior to applying next coat.

E. Reinstall electrical cover plates, hardware, light fixture trim, escutcheons, and fittings removed prior to finishing.

3.04 CLEANING

A. Collect waste material that could constitute a fire hazard, place in closed metal containers, and remove daily from site.

3.05 PROTECTION

A. Protect finishes until completion of project.

B. Touch-up damaged finishes after Substantial Completion.

3.06 SCHEDULE - PAINT SYSTEMS

A. Gypsum Board: Finish surfaces exposed to view, except
   1. Interior Walls: GI-OP-3A, semi-gloss.

B. Steel Doors and Frames: Finish surfaces exposed to view; MI-OP-3A, gloss.

END OF SECTION

SECTION 09 96 00

HIGH-PERFORMANCE COATINGS

PART 1 - GENERAL

1.1 SUMMARY

A. Section includes surface preparation and application of high-performance coating systems on the following substrates:

1. Exterior Substrates:

a. Concrete, vertical surfaces.
b. Steel.
c. Clay masonry.

1.2 DEFINITIONS

A. Gloss Level 6: 70 to 85 units at 60 degrees, according to ASTM D 523.

B. Gloss Level 7: More than 85 units at 60 degrees, according to ASTM D 523.

1.3 SUBMITTALS

A. Product Data: For each type of product indicated. Include preparation requirements and application instructions.

B. Product List: For each product indicated, include printout of current "MPI Approved Products List" for each product category specified in Part 2, with the proposed product highlighted.

1.4 CLOSEOUT SUBMITTALS

A. Furnish extra materials, from the same product run, that match products installed and that are packaged with protective covering for storage and identified with labels describing contents.

1. Coatings: 5 percent, but not less than 1 gal. (3.8 L) of each material and color applied.

1.5 QUALITY ASSURANCE

A. Mockups: Apply mockups of each coating system indicated to verify preliminary selections made under sample submittals and to demonstrate aesthetic effects and set quality standards for materials and execution.

1. Architect will select one surface to represent surfaces and conditions for application of each coating system specified in Part 3.

   a. Wall and Ceiling Surfaces: Provide samples of at least 100 sq. ft. (9 sq. m).
   b. Other Items: Architect will designate items or areas required.

PART 2 - PRODUCTS

2.1 MANUFACTURERS

A. Products: Subject to compliance with requirements, available products that may be incorporated into the Work include, but are not limited to products listed in other Part 2 articles for the paint category indicated.

2.2 HIGH-PERFORMANCE COATINGS, GENERAL

A. MPI Standards: Provide products that comply with MPI standards indicated and are listed in "MPI Approved Products List."

B. Material Compatibility:

   1. Provide materials for use within each coating system that are compatible with one another and substrates indicated, under conditions of service and application as demonstrated by manufacturer, based on testing and field experience.
   2. For each coat in a coating system, provide products recommended in writing by manufacturers of topcoat for use in coating system and on substrate indicated.

   3. Provide products of same manufacturer for each coat in a coating system.

C. VOC Content: Products shall comply with VOC limits of authorities having jurisdiction.

D. Color: Sherwin Williams SW1123 / Navajo White, or approved equal.

2.3 PAINT CATEGORIES

A. The following products are the basis of design for finishing the substrates listed:

   1. Concrete and Clay Masonry:
      a. Primer: B58W00610 - Macropoxy® 646 Fast Cure Epoxy
      b. Topcoat: B58W00610 - Macropoxy® 646 Fast Cure Epoxy
      c. Anti-graffiti: B65T00194 – Anti-Graffiti 2K Waterbased Urethane Coating - Gloss

   2. Steel:
      a. Shop Primed: B58W00610 - Macropoxy® 646 Fast Cure Epoxy
      b. Intermediate Coat: B58W00610 - Macropoxy® 646 Fast Cure Epoxy
      c. Topcoat: B58W00610 - Macropoxy® 646 Fast Cure Epoxy
      d. Anti-graffiti: B65T00194 – Anti-graffiti 2K Waterbased Urethane Coating - Gloss

PART 3 - EXECUTION

3.1 EXAMINATION

A. Examine substrates and conditions, with Applicator present, for compliance with requirements for maximum moisture content and other conditions affecting performance of the Work.

1. Maximum Moisture Content of Substrates: When measured with an electronic moisture meter as follows:

a. Concrete: 12 percent.

B. Verify suitability of substrates, including surface conditions and compatibility with existing finishes and primers.

C. Proceed with coating application only after unsatisfactory conditions have been corrected.

1. Beginning coating application constitutes Contractor's acceptance of substrates and conditions.

3.2 PREPARATION

A. Comply with manufacturer's written instructions and recommendations in "MPI Architectural Painting Specification Manual" applicable to substrates indicated.

B. Clean substrates of substances that could impair bond of coatings, including dust, dirt, oil, grease, and incompatible paints and encapsulants.

1. Remove incompatible primers and reprime substrate with compatible primers or apply tie coat as required to produce coating systems indicated.

3.3 APPLICATION

A. Apply high-performance coatings according to manufacturer's written instructions and recommendations in "MPI Architectural Painting Specification Manual."

B. Apply coatings to produce surface films without cloudiness, spotting, holidays, laps, brush marks, runs, sags, ropiness, or other surface imperfections. Produce sharp glass lines and color breaks.

3.4 CLEANING AND PROTECTION

A. Protect work of other trades against damage from coating operation. Correct damage by cleaning, repairing, replacing, and recoating, as approved by Architect, and leave in an undamaged condition.

B. At completion of construction activities of other trades, touch up and restore damaged or defaced coated surfaces.

END OF SECTION

SECTION 10 14 00

SIGNAGE

PART 1 - GENERAL

1.1 RELATED DOCUMENTS

A. Drawings and general provisions of the Contract, including General and Supplementary Conditions and Division 01 Specification Sections, apply to this Section.

1.2 SUMMARY

A. This Section includes the following types of signs:

1. Panel signs.

1.3 SUBMITTALS

A. General: Submit the following according to the Conditions of the Contract and Division 01 Specification Sections.

B. Product data for each type of sign specified, including details of construction relative to materials, dimensions of individual components, profiles, and finishes.

1.4 PROJECT CONDITIONS

A. Field Measurements: Take field measurements prior to preparation of shop drawings and fabrication to ensure proper fitting. Show recorded measurements on final shop drawings. Coordinate fabrication schedule with construction progress to avoid delay.

PART 2 - PRODUCTS

2.1 MANUFACTURERS

A. Available Manufacturers: Subject to compliance with requirements, manufacturers offering products that may be incorporated in the Work include, but are not limited to, the following:

1. Manufacturers of Panel Signs:

a. Cal-Royal Products, Inc. (Basis of Design)
b. ABC Architectural Signing System.
c. Allenite.
d. Andco Industries Corp.
e. APCO Graphics, Inc.

f. ASI Sign Systems, Inc.
g. Best Manufacturing Company.
h. Charleston Industries, Inc.
i. DGS Corp.
j. Diskey Sign Corp.
k. Environmental Graphic Systems, Inc.
l. Modulex.
m. Mohawk Sign Systems.
n. Poblocki & Sons, Inc.
o. Spanjer Brothers, Inc.
p. The Supersine Company.
q. Vomar Products, Inc.

2.2 PRODUCTS

A. Basis of Design: California Approved Restroom Signs (CAMH69).

1. Size: 6” wide x 9” high.
2. Tactile characters and Grade Z braille.
3. 9/64” thick injection molded polymer plastic.
4. 1/32” raised height of characters and pictogram.

B. Approved equal.

2.3 PANEL SIGNS

A. Panel Signs: Comply with requirements indicated for materials, thicknesses, finishes, colors, designs, shapes, sizes, and details of construction.

1. Produce smooth, even, level sign panel surfaces, constructed to remain flat under installed conditions within a tolerance of plus or minus 1/16 inch measured diagonally.

B. Laminated Sign Panels: Permanently laminate face panels to backing sheets of material and thickness indicated using the manufacturer's standard process.

C. Graphic Content and Style: Provide sign copy that complies with the requirements indicated for size, style, spacing, content, position, material, finishes, and colors of letters, numbers, and other graphic devices.

D. Raised Copy: Machine-cut copy characters from matte-finished opaque acrylic sheet and chemically weld onto the acrylic sheet forming sign panel face. Produce precisely formed characters with square cut edges free from burrs and cut marks.

1. Panel Material: Matte-finished opaque acrylic sheet.
2. Panel Material: As indicated.
3. Raised Copy Thickness: 1/8 inch minimum.

2.4 FINISHES

A. Colors and Surface Textures: For exposed sign material that requires selection of materials with integral or applied colors, surface textures or other characteristics related to appearance, provide color matches MP23708 North Sea Blue.

PART 3 - EXECUTION

3.1 INSTALLATION

A. General: Locate sign units and accessories where indicated, using mounting methods of the type described and in compliance with the manufacturer's instructions.

1. Install signs level, plumb, and at the height indicated, with sign surfaces free from distortion or other defects in appearance.

B. Wall-Mounted Panel Signs: Attach panel signs to wall surfaces using the methods indicated below:

1. Vinyl-Tape Mounting: Use double-sided foam tape to mount signs to smooth, nonporous surfaces. Do not use this method for vinyl-covered or rough surfaces.
2. Silicone-Adhesive Mounting: Use liquid silicone adhesive recommended by the sign manufacturer to attach sign units to irregular, porous, or vinyl-covered surfaces. Use double-sided vinyl tape where recommended by the sign manufacturer to hold the sign in place until the adhesive has fully cured.
3. Shim Plate Mounting: Provide 1/8-inch-thick concealed aluminum shim plates with predrilled and countersunk holes, at locations indicated, and where other mounting methods are not practicable. Attach the plate with fasteners and anchors suitable for secure attachment to the substrate. Attach panel sign units to the plate using the method specified above.

3.2 CLEANING AND PROTECTION

A. After installation, clean soiled sign surfaces according to the manufacturer's instructions. Protect units from damage until acceptance by the Owner.

END OF SECTION

This page intentionally left blank.

SECTION 12 36 00

COUNTERTOPS

PART 1 GENERAL

1.01 SECTION INCLUDES

A. Countertops for architectural cabinet work.

1.02 REFERENCE STANDARDS

A. ISFA 2-01 - Classification and Standards for Solid Surfacing Material 2013.

B. NEMA LD 3 - High-Pressure Decorative Laminates 2005.

1.03 SUBMITTALS

A. See Section 01 33 23 – Shop Drawings, Product Data and Samples.

B. Shop Drawings: Complete details of materials and installation ; combine with shop drawings of cabinets and casework specified in other sections.

C. Selection Samples: For each finish product specified, color chips representing manufacturer's full range of available colors and patterns.

D. Test Reports: Chemical resistance testing, showing compliance with specified requirements.

1.04 DELIVERY, STORAGE, AND HANDLING

A. Store products in manufacturer's unopened packaging until ready for installation.

B. Store and dispose of solvent-based materials, and materials used with solvent-based materials, in accordance with requirements of local authorities having jurisdiction.

PART 2 PRODUCTS

2.01 COUNTERTOPS

A. Solid Surfacing Countertops: Solid surfacing sheet or plastic resin casting over continuous substrate.
   1. Flat Sheet Thickness: 1/2 inch (12 mm), minimum.
   2. Solid Surfacing Sheet and Plastic Resin Castings: Complying with ISFA 2-01 and NEMA LD 3; acrylic or polyester resin, mineral filler, and pigments; homogenous, non-porous and capable of being worked and repaired using standard woodworking tools; no surface coating; color and pattern consistent throughout thickness.
      a. Manufacturers:
         1) Dupont: www.corian.com.
         2) Formica Corporation: www.formica.com.

3) Wilsonart: www.wilsonart.com.

b. Finish on Exposed Surfaces: Matte, gloss rating of 5 to 20.

c. Color and Pattern: 9106CS Maple Harvest.

3. Other Components Thickness: 1/2 inch (12 mm), minimum.

4. Exposed Edge Treatment: Built up to minimum 1-1/4 inch (32 mm) thick; square edge; use marine edge at sinks.

5. Back and End Splashes: Same sheet material, square top; minimum 4 inches (102 mm) high.

2.02 MATERIALS

A. Adhesives: Chemical resistant waterproof adhesive as recommended by manufacturer of materials being joined.

2.03 FABRICATION

A. Fabricate tops and splashes in the largest sections practicable, with top surface of joints flush.

1. Join lengths of tops using best method recommended by manufacturer.

2. Fabricate to overhang fronts and ends of cabinets 1 inch (25 mm) except where top butts against cabinet or wall.

3. Prepare all cutouts accurately to size; replace tops having improperly dimensioned or unnecessary cutouts or fixture holes.

B. Provide back/end splash wherever counter edge abuts vertical surface unless otherwise indicated.

1. Secure to countertop with concealed fasteners and with contact surfaces set in waterproof glue.

2. Height: 4 inches (102 mm), unless otherwise indicated.

C. Solid Surfacing: Fabricate tops up to 144 inches (3,657 mm) long in one piece; join pieces with adhesive sealant in accordance with manufacturer's recommendations and instructions.

PART 3 EXECUTION

3.01 EXAMINATION

A. Do not begin installation until substrates have been properly prepared.

B. If substrate preparation is the responsibility of another installer, notify Architect of unsatisfactory preparation before proceeding.

C. Verify that wall surfaces have been finished and mechanical and electrical services and outlets are installed in proper locations.

3.02 INSTALLATION

A. Securely attach countertops to cabinets using concealed fasteners. Make flat surfaces level; shim where required.

B. Seal joint between back/end splashes and vertical surfaces.

3.03 CLEANING

A. Clean countertops surfaces thoroughly.

3.04 PROTECTION

A. Protect installed products until completion of project.

B. Touch-up, repair or replace damaged products before Date of Substantial Completion.

END OF SECTION

This page intentionally left blank.

SECTION 23 05 93
TESTING, ADJUSTING, AND BALANCING FOR HVAC

PART 1 GENERAL

1.01 SECTION INCLUDES

A. Testing, adjustment, and balancing of air systems.

B. Measurement of final operating condition of HVAC systems.

C. Commissioning activities.

1.02 RELATED REQUIREMENTS

A. Section 01 40 00 - Quality Requirements: Employment of testing agency and payment for services.

1.03 REFERENCE STANDARDS

A. ASHRAE Std 111 - Measurement, Testing, Adjusting, and Balancing of Building HVAC Systems; 2008.

B. NEBB (TAB) - Procedural Standards for Testing Adjusting and Balancing of Environmental Systems; 2015, Eighth Edition.

C. SMACNA (TAB) - HVAC Systems Testing, Adjusting and Balancing; 2002.

1.04 SUBMITTALS

A. See Section 01 30 00 - Administrative Requirements, for submittal procedures.

B. TAB Plan: Submit a written plan indicating the testing, adjusting, and balancing standard to be followed and the specific approach for each system and component.
   1. Submit to DEDC, LLC.
   2. Include at least the following in the plan:
      a. List of all air flow, water flow, sound level, system capacity and efficiency measurements to be performed and a description of specific test procedures, parameters, formulas to be used.
      b. Copy of field checkout sheets and logs to be used, listing each piece of equipment to be tested, adjusted and balanced with the data cells to be gathered for each.
      c. Discussion of what notations and markings will be made on the duct and piping drawings during the process.
      d. Final test report forms to be used.
      e. Detailed step-by-step procedures for TAB work for each system and issue, including:
         1) Terminal flow calibration (for each terminal type).
         2) Diffuser proportioning.
         3) Branch/submain proportioning.
         4) Total flow calculations.
         5) Rechecking.
         6) Diversity issues.
      f. Expected problems and solutions, etc.
      g. Details of how TOTAL flow will be determined; for example:
         1) Air: Sum of terminal flows via control system calibrated readings or via hood readings of all terminals, supply (SA) and return air (RA) pitot traverse, SA or RA flow stations.
         2) Water: Pump curves, circuit setter, flow station, ultrasonic, etc.
      h. Confirmation of understanding of the outside air ventilation criteria under all conditions.
      i. Method of verifying and setting minimum outside air flow rate will be verified and set and for what level (total building, zone, etc.).
      j. Procedures for formal deficiency reports, including scope, frequency and distribution.

C. Final Report: Indicate deficiencies in systems that would prevent proper testing, adjusting, and balancing of systems and equipment to achieve specified performance.
   1. Revise TAB plan to reflect actual procedures and submit as part of final report.
   2. Submit draft copies of report for review prior to final acceptance of Project. Provide final copies for DEDC, LLC and for inclusion in operating and maintenance manuals.
   3. Include actual instrument list, with manufacturer name, serial number, and date of calibration.
   4. Form of Test Reports: Where the TAB standard being followed recommends a report format use that; otherwise, follow ASHRAE Std 111.
   5. Units of Measure: Report data in both I-P (inch-pound) and SI (metric) units.
   6. Include the following on the title page of each report:
      a. Name of Testing, Adjusting, and Balancing Agency.
      b. Address of Testing, Adjusting, and Balancing Agency.
      c. Telephone number of Testing, Adjusting, and Balancing Agency.
      d. Project name.
      e. Project location.
      f. Project Engineer.
      g. Project Contractor.
      h. Report date.

PART 2 PRODUCTS - NOT USED

PART 3 EXECUTION

3.01 GENERAL REQUIREMENTS

A. TAB contractor shall review all of the drawings with special attention to the controls drawings as there is additional instruction on the drawings and sequence of operation as to how balancing shall be performed and what information the controls contractor is required to obtain.

B. TAB contractor shall perform ductwork leak tests prior to installation of ceiling. TAB contractor shall schedule this work thru the mechanical contractor.

C. Perform total system balance in accordance with one of the following:
   1. NEBB Procedural Standards for Testing Adjusting Balancing of Environmental Systems.
   2. SMACNA (TAB).

D. Begin work after completion of systems to be tested, adjusted, or balanced and complete work prior to Substantial Completion of the project.

E. Where HVAC systems and/or components interface with life safety systems, including fire and smoke detection, alarm, and control, coordinate scheduling and testing and inspection procedures with the authorities having jurisdiction.

F. TAB Agency Qualifications:
   1. Company specializing in the testing, adjusting, and balancing of systems specified in this section.
   2. Certified by one of the following:
      a. NEBB, National Environmental Balancing Bureau: www.nebb.org/#sle.
      b. TABB, The Testing, Adjusting, and Balancing Bureau of National Energy Management Institute: www.tabbcertified.org/#sle.

G. TAB Supervisor and Technician Qualifications: Certified by same organization as TAB agency.

3.02 EXAMINATION

A. Verify that systems are complete and operable before commencing work. Ensure the following conditions:
   1. Systems are started and operating in a safe and normal condition.
   2. Temperature control systems are installed complete and operable.
   3. Proper thermal overload protection is in place for electrical equipment.

4. Final filters are clean and in place. If required, install temporary media in addition to final filters.
5. Duct systems are clean of debris.
6. Fans are rotating correctly.
7. Fire and volume dampers are in place and open.
8. Air coil fins are cleaned and combed.
9. Access doors are closed and duct end caps are in place.
10. Air outlets are installed and connected.
11. Duct system leakage is minimized.
12. Hydronic systems are flushed, filled, and vented.
13. Pumps are rotating correctly.
14. Proper strainer baskets are clean and in place.
15. Service and balance valves are open.

B. Submit field reports. Report defects and deficiencies that will or could prevent proper system balance.

C. Beginning of work means acceptance of existing conditions.

3.03 PREPARATION

A. Hold a pre-balancing meeting at least one week prior to starting TAB work.
   1. Require attendance by all installers whose work will be tested, adjusted, or balanced.

B. Provide instruments required for testing, adjusting, and balancing operations. Make instruments available to DEDC, LLC to facilitate spot checks during testing.

3.04 ADJUSTMENT TOLERANCES

A. Air Handling Systems: Adjust to within plus or minus 5 percent of design for supply systems and plus or minus 10 percent of design for return and exhaust systems.

B. Hydronic Systems: Adjust to within plus or minus 10 percent of design.

3.05 RECORDING AND ADJUSTING

A. Ensure recorded data represents actual measured or observed conditions.

B. Permanently mark settings of valves, dampers, and other adjustment devices allowing settings to be restored. Set and lock memory stops.

C. After adjustment, take measurements to verify balance has not been disrupted or that such disruption has been rectified.

D. Leave systems in proper working order, replacing belt guards, closing access doors, closing doors to electrical switch boxes, and restoring thermostats to specified settings.

3.06 AIR SYSTEM PROCEDURE

A. Adjust air handling and distribution systems to provide required or design supply, return, and exhaust air quantities at site altitude.

B. Make air quantity measurements in ducts by Pitot tube traverse of entire cross sectional area of duct.

C. Measure air quantities at air inlets and outlets.

D. Adjust distribution system to obtain uniform space temperatures free from objectionable drafts and noise.

E. Use volume control devices to regulate air quantities only to extend that adjustments do not create objectionable air motion or sound levels. Effect volume control by duct internal devices such as dampers and splitters.

F. Vary total system air quantities by adjustment of fan speeds. Provide drive changes required. Vary branch air quantities by damper regulation.

G. Where modulating dampers are provided, take measurements and balance at extreme conditions. Balance variable volume systems at maximum air flow rate, full cooling, and at minimum air flow rate, full heating.

3.07 COMMISSIONING

A. See Sections 01 91 13 - General Commissioning Requirements and 23 08 00 for additional requirements.

B. Perform prerequisites prior to starting commissioning activities.

C. Fill out Prefunctional Checklists for:
   1. Air side systems.

D. Furnish to the Commissioning Authority, upon request, any data gathered but not shown in the final TAB report.

E. Re-check a random sample equivalent to 10 percent of the final TAB report data as directed by Commissioning Authority.
   1. Original TAB agency shall execute the re-checks, witnessed by the Commissioning Authority.
   2. Use the same test instruments as used in the original TAB work.
   3. Failure of more than 10 percent of the re-checked items of a given system shall result in the rejection of the system TAB report; rebalance the system, provide a new system TAB report, and repeat random re-checks.
   4. For purposes of re-check, failure is defined as follows:
      a. Air Flow of Supply and Return: Deviation of more than 10 percent of instrument reading.
      b. Minimum Outside Air Flow: Deviation of more than 20 percent of instrument reading; for inlet vane or VFD OSA compensation system using linear proportional control, deviation of more than 30 percent at intermediate supply flow.
      c. Temperatures: Deviation of more than one degree F.
      d. Air and Water Pressures: Deviation of more than 10 percent of full scale of test instrument reading.
      e. Sound Pressures: Deviation of more than 3 decibels, with consideration for variations in background noise.
   5. For purposes of re-check, a whole system is defined as one in which inaccuracies will have little or no impact on connected systems; for example, the air distribution system served by one air handler or the hydronic chilled water supply system served by a chiller or the condenser water system.

F. In the presence of the Commissioning Authority, verify that:
   1. Final settings of all valves, splitters, dampers and other adjustment devices have been permanently marked.
   2. The air system is being controlled to the lowest possible static pressure while still meeting design loads, less diversity; this shall include a review of TAB methods, established control setpoints, and physical verification of at least one leg from fan to diffuser having all balancing dampers wide open and that during full cooling of all terminal units taking off downstream of the static pressure sensor, the terminal unit on the critical leg has its damper 90 percent or more open.
   3. The water system is being controlled to the lowest possible pressure while still meeting design loads, less diversity; this shall include a review of TAB methods, established control setpoints, and physical verification of at least one leg from the pump to the coil having all balancing valves wide open and that during full cooling the cooling coil valve of that leg is 90 percent or more open.

3.08 SCOPE

A. Test, adjust, and balance the following:

1. Air Inlets and Outlets.

3.09 MINIMUM DATA TO BE REPORTED

A. Return Air/Supply Air/Outside Air:
   1. Identification/location.
   2. Design air flow.
   3. Actual air flow.
   4. Design return air flow.
   5. Actual return air flow.
   6. Design supply air flow
   7. Actual supply air flow
   8. Design outside air flow.
   9. Actual outside air flow.
   10. Return air temperature.
   11. Outside air temperature.
   12. Required mixed air temperature.
   13. Actual mixed air temperature.
   14. Design outside/return air ratio.
   15. Actual outside/return air ratio.

B. Duct Traverses:
   1. System zone/branch.
   2. Duct size.
   3. Area.
   4. Design velocity.
   5. Design air flow.
   6. Test velocity.
   7. Test air flow.
   8. Duct static pressure.
   9. Air temperature.
   10. Air correction factor.

END OF SECTION

This page intentionally left blank

SECTION 23 07 13
DUCT INSULATION

PART 1 GENERAL

1.01 SECTION INCLUDES

A. Glass Fiber, Flexible.

B. Glass Fiber, Rigid

C. Jackets.

D. Duct insulation.

E. Jacketing and accessories.

1.02 RELATED REQUIREMENTS

A. Section 23 05 53 - Identification for HVAC Piping and Equipment.

B. Section 23 31 00 - HVAC Ducts and Casings

1.03 REFERENCE STANDARDS

A. ASTM C518 - Standard Test Method for Steady-State Thermal Transmission Properties by Means of the Heat Flow Meter Apparatus; 2010.

B. ASTM C553 - Standard Specification for Mineral Fiber Blanket Thermal Insulation for Commercial and Industrial Applications; 2013.

C. ASTM C612 - Standard Specification for Mineral Fiber Block and Board Thermal Insulation; 2014.

D. ASTM C1071 - Standard Specification for Fibrous Glass Duct Lining Insulation (Thermal and Sound Absorbing Material); 2012.

E. ASTM E84 - Standard Test Method for Surface Burning Characteristics of Building Materials; 2026a.

F. ASTM E96/E96M - Standard Test Methods for Water Vapor Transmission of Materials; 2014.

G. SMACNA (DCS) - HVAC Duct Construction Standards Metal and Flexible; 2005.

H. UL 723 - Standard for Test for Surface Burning Characteristics of Building Materials; Current Edition, Including All Revisions.

1.04 SUBMITTALS

A. See Section 01 30 00 - Administrative Requirements for submittal procedures.

B. Product Data: Provide product description, thermal characteristics, list of materials and thickness for each service, and locations.

1.05 QUALITY ASSURANCE

A. Manufacturer Qualifications: Company specializing in manufacturing products of the type specified in this section with not less than three years of documented experience.

1.06 DELIVERY, STORAGE, AND HANDLING

A. Accept materials on site in original factory packaging, labelled with manufacturer's identification, including product density and thickness.

B. Protect insulation from weather and construction traffic, dirt, water, chemical, and mechanical damage, by storing in original wrapping.

1.07 FIELD CONDITIONS

A. Maintain ambient temperatures and conditions required by manufacturers of adhesives, mastics, and insulation cements.

B. Maintain temperature during and after installation for minimum period of 24 hours.

PART 2 PRODUCTS

2.01 REGULATORY REQUIREMENTS

A. Surface Burning Characteristics: Flame spread index/Smoke developed index of 25/50, maximum, when tested in accordance with ASTM E84, UL 723, ASTM E84, or UL 723.

2.02 GLASS FIBER, FLEXIBLE

A. Manufacturer:
   1. Johns Manville: www.jm.com.
   2. Knauf Insulation: www.knaufinsulation.com/#sle.
   3. Owens Corning Corporation: www.ocbuildingspec.com/#sle.

B. Insulation: ASTM C553; flexible, noncombustible blanket.
   1. K value: 0.36 at 75 degrees F, when tested in accordance with ASTM C518.
   2. Minimum Density of 1.0 PCF.

C. Vapor Barrier Jacket:
   1. 0.0032 inch vinyl.
   2. Moisture Vapor Permeability: 0.02 perm inch, when tested in accordance with ASTM E96/E96M.
   3. Secure with pressure-sensitive tape.

2.03 GLASS FIBER, RIGID

A. Manufacturer:
   1. CertainTeed Corporation: www.certainteed.com/#sle.
   2. Johns Manville: www.jm.com.
   3. Knauf Insulation: www.knaufinsulation.com/#sle.
   4. Owens Corning Corp: www.owenscorning.com.
   5. Substitutions: See Section 01 60 00 - Product Requirements.

B. Insulation: ASTM C612; rigid, noncombustible blanket.
   1. K Value: 0.24 at 75 degrees F, when tested in accordance with ASTM C518.
   2. Maximum Service Temperature: 450 degrees F.
   3. Maximum Water Vapor Absorption: 5.0 percent.
   4. Maximum Density: 8.0 pcf.

C. Vapor Barrier Jacket:
   1. 0.0032 inch vinyl.
   2. Moisture Vapor Permeability: 0.02 perm inch, when tested in accordance with ASTM E96/E96M.

2.04 JACKETING AND ACCESSORIES

A. Canvas Jacket: UL listed 6 oz/sq yd plain weave cotton fabric treated with dilute fire-retardant lagging adhesive.
   1. Lagging Adhesive:
      a. Compatible with insulation.

PART 3 EXECUTION

3.01 EXAMINATION

A. Test ductwork for design pressure prior to applying insulation materials.

B. Verify that surfaces are clean, foreign material removed, and dry.

3.02 INSTALLATION

A. Install in accordance with manufacturer's instructions.
   1. For rigid polyisocyanurate, installation shall only be completed by manufacturer licensed contractors.

B. Insulated Ducts Conveying Air Below Ambient Temperature:
   1. Provide insulation with vapor barrier jackets.
   2. Finish with tape and vapor barrier jacket.
   3. Continue insulation through walls, sleeves, hangers, and other duct penetrations.
   4. Insulate entire system, including fittings, joints, flanges, fire dampers, flexible connections, and expansion joints.

C. Insulated Ducts Conveying Air Above Ambient Temperature:
   1. Provide with or without standard vapor barrier jacket.
   2. Insulate fittings and joints. Where service access is required, bevel and seal ends of insulation.

D. Ducts Exposed in Mechanical Equipment Rooms or Finished Spaces (below 10 feet above finished floor): Finish with canvas jacket sized for finish painting.

3.03 SCHEDULES

A. Exhaust Ducts Within 10 ft of Exterior Openings: 2 inches thick, flexible glass fiber or rigid board.

B. Outside Air Intake Ducts: 2 inches thick, flexible glass fiberor rigid board.

C. Supply Ducts within insulated building envelope (R-6 min.): 2 inches thick, flexible glass fiber

D. Return Ducts: 1 inch thick, flexible glass fiber or rigid board.

E. Ducts exposed in mechanical room or non public spaces: shall be provided with rigid board and jacket.

END OF SECTION

This page intentionally left blank

SECTION 23 31 00
HVAC DUCTS AND CASINGS

PART 1 GENERAL

1.01 SECTION INCLUDES

A. Metal ducts.

B. Air plenums and casings

1.02 RELATED REQUIREMENTS

A. Section 07 84 00 - Firestopping

B. Section 23 37 00 - Air Outlets and Inlets

C. Section 23 05 93 - Testing, Adjusting, and Balancing for HVAC

1.03 REFERENCE STANDARDS

A. ASTM A653/A653M - Standard Specification for Steel Sheet, Zinc-Coated (Galvanized) or Zinc-Iron Alloy-Coated (Galvannealed) by the Hot-Dip Process; 2015.

B. NFPA 90A - Standard for the Installation of Air-Conditioning and Ventilating Systems; 2027.

C. NFPA 90B - Standard for the Installation of Warm Air Heating and Air-Conditioning Systems; 2015.

D. NFPA 96 - Standard for Ventilation Control and Fire Protection of Commercial Cooking Operations; 2014.

E. SMACNA (DCS) - HVAC Duct Construction Standards Metal and Flexible; 2005.

F. SMACNA (LEAK) - HVAC Air Duct Leakage Test Manual; 2012, 2nd Edition.

1.04 SUBMITTALS

A. See Section 01 30 00 - Administrative Requirements for submittal procedures.

B. Product Data: Provide data for duct materials.

C. Shop Drawings: Indicate duct fitting types, gauges, sizes, welds, and configuration.

D. Test Reports: Indicate pressure tests performed. Include date, section tested, test pressure, and leakage rate per appropriate seal class, following SMACNA (LEAK).

E. Project Record Documents: Record actual locations of ducts and duct fittings. Record changes in fitting location and type. Show additional fittings used.

1.05 QUALITY ASSURANCE

A. Manufacturer Qualifications: Company specializing in manufacturing the type of products specified in this section, with minimum three years of documented experience, and approved by manufacturer.

1.06 REGULATORY REQUIREMENTS

A. Construct ductwork to NFPA 90A, NFPA 90B, and NFPA 96 standards.

1.07 FIELD CONDITIONS

A. Do not install duct sealants when temperatures are less than those recommended by sealant manufacturers.

B. Maintain temperatures within acceptable range during and after installation of duct sealants.

PART 2 PRODUCTS

2.01 GENERAL REQUIREMENTS

A. Provide UL Class 1 ductwork, fittings, hangers, supports, and appurtenances in accordance with NFPA 90A and SMACNA (DCS) guidelines unless stated otherwise.

B. Provide metal duct unless otherwise indicated. Fibrous glass duct can be substituted at the Contractor's option.

C. Acoustical Treatment: Provide sound-absorbing liners and sectional silencers for metal-based ducts in compliance with Section 23 33 19.

D. Duct Shape and Material in accordance with Allowed Static Pressure Range:

E. Duct Sealing and Leakage in accordance with Static Pressure Class:

F. Duct Fabrication Requirements:
   1. Duct and Fitting Fabrication and Support: SMACNA (DCS) including specifics for continuously welded round and oval duct fittings.
   2. Use reinforced and sealed sheet-metal materials at recommended gauges for indicated operating pressures or pressure class.
   3. Construct tee's, bends, and elbows with radius of not less than 1-1/2 times width of duct on centerline. Where not possible and where rectangular elbows must be used, provide air foil turning vanes of perforated metal with glass fiber insulation.
   4. Provide turning vanes of perforated metal with glass fiber insulation when acoustical lining is indicated.
   5. Increase duct sizes gradually, not exceeding 15 degrees divergence wherever possible; maximum 30 degrees divergence upstream of equipment and 45 degrees convergence downstream.
   6. Provide turning vanes of perforated metal with glass fiber insulation when an acoustical lining is required.
   7. Where ducts are connected to exterior wall louvers and duct outlet is smaller than louver frame, provide blank-out panels sealing louver area around duct. Use same material as duct, painted black on exterior side; seal to louver frame and duct.

G. All Ducts: Galvanized steel, or Manufactured Non-Metallic Ductwork.

H. Grease Exhaust: 1 inch w.g. pressure class, un-galvanized steel.

2.02 METAL DUCTS

A. Material Requirements:
   1. Galvanized Steel: Hot-dipped galvanized steel sheet, ASTM A653/A653M FS Type B, with G60/Z180 coating.

B. Manufactured Non-Metallic Ductwork:
   1. Products:
      a. Ductwork system materials including panels, adhesives, tapes, sealants, flanges and gaskets to be as a matched system listed by Underwriter's Laboratory to the UL-181 standard as a Class 1 air duct.
      b. Duct air leakage rates to be in compliance with SMACNA Class 3 HVAC Duct Construction Standards, latest version per applicable leakage class based on pressure.
      c. The panel shall be manufactured of CFC/HCFC-free rigid material thermobonded on both sides to a factory-applied .001"(25 micron) aluminum foil facing reinforced with a fiberglass scrim. The thermal conductivity shall be no greater than 0.13BTU in/hr x sq.ft x degree F(.018W/m x deg. C), and the density of the material shall not be less than 3.5 pcf(56 Kg/sq.m) with a minimum compressive strength of 28 psi (.2 MPa).
      d. The standard thermal rating to be a minimum of an R-6.0 (1.2 RSI)
      e. Installed ducting system must be warranted for a minimum of ten years from installation.
   2. Application:
      a. All fabricated duct segment fittings shall be designed in accordance with SMACNA HVAC Duct Construction Standards, latest edition.
   3. Duct Installation:

a. All exterior mounted ductwork shall be protected against the elements with a non-duct penetrating weatherproof finish. Duct segments shall incorporate 6.0 mils thickness 5-ply aluminum, zero permeability, absolute vapor barrier self-adhesive jacketing. All external seams and joints shall be fully sealed with joint and seam tape during the installation process.

4. Manufacturers:
   a. KoolDuct; www.ptmmanufacturing.com
   b. Substitutions: See Section 01 60 00 - Product Requirements.

C. Flexible Ducts: Black polymer film supported by helically wound spring steel wire.
   1. Manufacturers:
      a. Thermaflex Model M-KE.
      b. Hart and Cooley Model F216.

2.03 AIR PLENUMS AND CASINGS

A. Fabricate in accordance with SMACNA (DCS) for indicated operating pressures indicated.

B. Minimum Fabrication Requirements:
   1. Fabricate acoustic plenum or casing with reinforcing turned inward.
   2. Provide 16 gauge, 0.059 inch sheet steel back facing and 22 gauge, 0.029 inch perforated sheet steel front facing with 3/32 inch diameter holes on 5/32 inch centers.
   3. Construct panels 3 inches thick packed with 4.5 pcf minimum glass fiber insulation media, on inverted channels of 16 gauge, 0.059 inch sheet steel.
   4. Mount floor mounted plenum or casings on 4 inch high concrete curbs. At floor, rivet panels on 8 inch centers to angles. Where floors are acoustically insulated, provide liner of galvanized 18 gauge, 0.052 inch expanded metal mesh supported at 12 inch centers, turned up 12 inches at sides with sheet metal shields.

C. Access Doors:
   1. Install hinged access doors where indicated or required for access to equipment for cleaning and inspection.
   2. Reinforce door frames with steel angles tied to horizontal and vertical plenum supporting angles.
   3. Provide clear wire glass observation ports, minimum 6 by 6 inch size.

PART 3 EXECUTION

3.01 INSTALLATION

A. Install, support, and seal ducts in accordance with SMACNA (DCS).

B. Install products following the manufacturer's instructions.

C. During construction, provide temporary closures of metal or taped polyethylene on open ductwork to prevent construction dust from entering the ductwork system.

D. Duct sizes indicated are inside precise dimensions. For lined ducts, maintain sizes inside lining.

E. Provide openings in ductwork as indicated to accommodate thermometers and controllers. Provide pilot tube openings as indicated for testing of systems, complete with metal can with spring device or screw to insure against air leakage. For openings, insulate ductwork and install insulation material inside a metal ring.

F. Locate ducts with sufficient space around equipment to allow normal operating and maintenance activities.

G. Use crimp joints with or without bead for joining round duct sizes 8 inch and smaller with a crimp in the direction of airflow.

H. Use double nuts and lock washers on threaded rod supports.

I. Connect terminal units to supply ducts directly or with one foot maximum length of flexible duct. Do not use a flexible duct to change direction.

J. At exterior wall louvers, seal duct to louver frame and install blank-out panels.

3.02 CLEANING

A. Clean thoroughly each duct system as indicated within Section 23 01 30.51.

B. Clean the duct system and force air at high velocity through the duct to remove accumulated dust. Clean half the system at a time to obtain sufficient air. Protect equipment that could be harmed by excessive dirt with temporary filters or bypass during cleaning.

3.03 PRESSURE TESTING

A. Prior to the balancing of the duct system by the AABC certified balancing contractor all ductwork shall be tested by the mechanical contractor for duct leakage in accordance with SMACNA Standards and AABC Standards Chapter 23. Duct leakage shall not exceed 1% for a duration of (10) ten minutes. Test pressures shall be as per SMACNA, however, not less than the following:
   1. Low Pressure Duct:
      a. 25% above system operating pressure, but not less than 2" w.c. (500 Pa).
   2. High Pressure Supply Duct:
      a. 25% above system operating pressure, but not less than 6" w.c. (1500 Pa).
   3. High Pressure Exhaust Duct:
      a. 25% above system operating pressure, but not less than 8" w.c. (2000 Pa).

B. Insulation materials shall not be applied until systems have been witnessed to meet the above testing requirements.

C. The testing and balancing contractor shall witness and certify all duct pressure tests.

D. Additional leak testing requirements:
   1. Disassemble, reassemble, and seal segments of duct systems to accomodate leakage testing and for compliance with test requirements.
   2. If static pressure classes are not indicated, test system at maximum system design pressure. Do not pressurize systems above maximum design operating pressure.
   3. Provide seven (7) days advance notice for testing.

3.04 SCHEDULES

A. Ductwork Pressure Class:
   1. Supply (Heating Systems): 2 inch (500 Pa
   2. Supply (System with Cooling Coils): 2 inch.
   3. Return Ductwork: 1 inch.

END OF SECTION

SECTION 23 37 00
AIR OUTLETS AND INLETS

PART 1 GENERAL

1.01 SECTION INCLUDES

A. Diffusers:

B. Rectangular ceiling diffusers.

C. Registers/grilles:
   1. Ceiling-mounted, exhaust and return register/grilles.
   2. Ceiling-mounted, supply register/grilles.
   3. Wall-mounted, grid core exhaust and return register/grilles.

1.02 REFERENCE STANDARDS

A. ASHRAE Std 70 - Method of Testing the Performance of Air Outlets and Inlets; 2006 (R2011).

1.03 SUBMITTALS

A. See Section 01 30 00 - Administrative Requirements for submittal procedures.

B. Product Data: Provide data for equipment required for this project. Review outlets and inlets as to size, finish, and type of mounting prior to submission. Submit schedule of outlets and inlets showing type, size, location, application, and noise level.

C. Project Record Documents: Record actual locations of air outlets and inlets.

1.04 QUALITY ASSURANCE

A. Test and rate air outlet and inlet performance in accordance with ASHRAE Std 70.

PART 2 PRODUCTS

2.01 MANUFACTURERS

A. Carnes: www.carnes.com

B. Price Industries: www.price-hvac.com/#sle.

C. Titus: www.titus-hvac.com/#sle.

D. Or approved equal

E. Substitutions: See Section 01 60 00 - Product Requirements.

2.02 RECTANGULAR CEILING DIFFUSERS

A. Type: Square, stamped, multi-core diffuser to discharge air in 360 degree pattern with sectorizing baffles where indicated.

B. Frame: Inverted T-bar type. In plaster ceilings, provide plaster frame and ceiling frame.

C. Fabrication: Steel with baked enamel finish.

D. Accessories: Radial opposed blade damper and multi-louvered equalizing grid with damper adjustable from diffuser face.

2.03 CEILING SUPPLY REGISTERS/GRILLES

A. Manufacturers:
   1. Krueger-HVAC: www.krueger-hvac.com/#sle.
   2. Price Industries: www.price-hvac.com
   3. Titus: www.titus-hvac.com
   4. Carnes: www.carnes.com
   5. Substitutions: See Section 01 60 00 - Product Requirements.

B. Type: Streamlined and individually adjustable curved blades to discharge air along face of grille, one-way deflection.

C. Frame: 1-1/4 inch margin with countersunk screw mounting and gasket.

D. Construction: Made of aluminum extrusions with factory enamel finish.

E. Construction: Made of stainless steel.

2.04 CEILING EXHAUST AND RETURN REGISTERS/GRILLES

A. Manufacturers:
   1. Krueger-HVAC: www.krueger-hvac.com/#sle.
   2. Price Industries: www.price-hvac.com
   3. Titus: www.titus-hvac.com
   4. Metalaire, a brand of Metal Industries Inc[<>]: www.metalaire.com/#sle.
   5. Carnes: www.carnes.com
   6. Substitutions: See Section 01 60 00 - Product Requirements.

B. Type: Streamlined blades, 3/4 inch minimum depth, 3/4 inch maximum spacing, with blades set at 45 degrees, vertical face.

C. Frame: 1-1/4 inch margin with countersunk screw mounting.

D. Fabrication: Steel with 20 gauge, 0.0359 inch minimum frames and 22 gauge, 0.0299 inch minimum blades, steel and aluminum with 20 gauge, 0.0359 inch minimum frame, or aluminum extrusions, with factory baked enamel finish.

E. Fabrication: Stainless steel with 20 gauge, 0.0359 inch minimum frames and 22 gauge, 0.0299 inch minimum blades, steel and aluminum with 20 gauge, 0.0359 inch minimum frame.

2.05 WALL GRID CORE EXHAUST AND RETURN REGISTERS/GRILLES

A. Type: Fixed grilles of 1/2 by 1/2 by 1/2 inch louvers.

B. Fabrication: Aluminum with factory clear lacquer finish.

C. Frame: 1-1/4 inch margin with countersunk screw mounting.

D. Damper: Integral, gang-operated, opposed blade type with removable key operator, operable from face.

PART 3 EXECUTION

3.01 INSTALLATION

A. Install in accordance with manufacturer's instructions.

B. Check location of outlets and inlets and make necessary adjustments in position to comply with architectural features, symmetry, and lighting arrangement.

C. Install diffusers to ductwork with air tight connection.

D. Provide balancing dampers on duct take-off to diffusers, and grilles and registers, despite whether dampers are specified as part of the diffuser, or grille and register assembly.

E. Paint ductwork visible behind air outlets and inlets matte black.

F. Paint ductwork visible behind air outlets and inlets matte black.

END OF SECTION

SECTION 26 05 05
SELECTIVE DEMOLITION FOR ELECTRICAL

PART 1 GENERAL

1.01 SECTION INCLUDES

A. Electrical demolition.

1.02 RELATED REQUIREMENTS

A. Section 01 70 00 - Execution and Closeout Requirements: Additional requirements for alterations work.

B. Section 01 74 19 - Construction Waste Management and Disposal: Handling and disposal of construction waste, including requirements for Universal Waste Diversion.

C. Section 07 84 00 - Firestopping.

D. Section 26 05 53 - Identification for Electrical Systems.

PART 2 PRODUCTS

2.01 MATERIALS AND EQUIPMENT

A. Materials and equipment for patching and extending work: As specified in individual sections.

PART 3 EXECUTION

3.01 EXAMINATION

A. Verify field measurements and circuiting arrangements are as indicated.

B. Verify that abandoned wiring and equipment serve only abandoned facilities.

C. Demolition drawings are based on casual field observation and existing record documents. Contractor shall be responsible for field-verification of existing conditions prior to beginning work.

D. Report discrepancies to State of Delaware OMB - Division of Facilities Management before disturbing existing installation.

E. Beginning of demolition means installer accepts existing conditions.

3.02 PREPARATION

A. Prior to performing work on electrical circuits, Contractor shall positively identify power sources, turn circuit breakers or switches to "off" and lock out and/or tag out circuits as required.

B. Contractor shall coordinate all electrical demolition work with State of Delaware OMB - Division of Facilities Management as well as all other trades involved in Project.

C. Contractor shall keep work area clean and orderly.

D. All electrical demolition work shall be performed in a safe and orderly manner and in accordance with all State of Delaware OMB - Division of Facilities Management regulations, local codes, OSHA, International Building Code and National Electrical Code; all being most recent editions adopted by Authoriti(es) Having Jurisdiction, including all applicable amendments and supplements.

E. All electrical demolition work shall be scheduled and coordinated with State of Delaware OMB - Division of Facilities Management such that disruption of areas involved is kept to minimum.

F. All power shutdowns affecting areas not within scope of Project shall be coordinated with State of Delaware OMB - Division of Facilities Management. Accidental interruptions to services shall be repaired immediately by Contractor at no additional cost to State of Delaware OMB - Division of Facilities Management.

G. Disconnect electrical systems in walls, floors, and ceilings to be removed.

H. Coordinate utility service outages with utility company.

I. Provide temporary wiring and connections to maintain existing systems in service during construction. When work must be performed on energized equipment or circuits, use personnel experienced in such operations.

3.03 DEMOLITION AND EXTENSION OF EXISTING ELECTRICAL WORK

A. Perform work for removal and disposal of equipment and materials containing toxic substances regulated under the Federal Toxic Substances Control Act (TSCA) in accordance with applicable federal, state, and local regulations. Applicable equipment and materials include, but are not limited to:
   1. PCB-containing electrical equipment, including transformers, capacitors, and switches.
   2. PCB- and DEHP-containing lighting ballasts.
   3. Mercury-containing lamps and tubes, including fluorescent lamps, high intensity discharge (HID), arc lamps, ultra-violet, high pressure sodium, mercury vapor, ignitron tubes, neon, and incandescent.

B. Unless otherwise noted, all electrical items indicated for demolition shall be removed including all associated wiring, controls and accessible conduit and boxes traced back to source. Where removal causes power interruption of electrical items to remain, rewire existing circuits as required to maintain continuity.

C. Conduit and boxes becoming inactive that are inaccessible shall be abandoned in place with open ends filled with firestopping expandable foam in accordance with Section 07 84 00.

D. Openings in conduit and boxes remaining active shall be capped with appropriate fittings.

E. Unless otherwise noted, circuit breakers becoming inactive shall have operating mechanisms placed in "off" (de-energized) position and be labeled as "SPARE" in accordance with Section 26 05 53.

F. Contractor shall update panel schedules for all panelboards affected by Project in accordance with Section 26 05 53.

G. Remove, relocate, and extend existing installations to accommodate new construction.

H. All circuits abandoned or not used shall be located, identified, disconnected and removed back to source.

I. Remove abandoned wiring to source of supply.

J. Remove exposed abandoned conduit, including abandoned conduit above accessible ceiling finishes. Cut conduit flush with walls and floors, fill open ends with firestopping expandable foam in accordance with Section 07 84 00 and patch surfaces.

K. Remove existing abandoned wiring and conduit designated as obsolete by State of Delaware OMB - Division of Facilities Management authorities.

L. Disconnect abandoned outlets and remove devices. Remove abandoned outlets if conduit servicing them is abandoned and removed. Provide blank cover for abandoned outlets that are not removed.

M. Disconnect and remove abandoned panelboards and distribution equipment.

N. Disconnect and remove electrical devices and equipment serving utilization equipment that has been removed.

O. Disconnect and remove abandoned luminaires. Remove brackets, stems, hangers, and other accessories.

P. Remove abandoned support channel associated with demolished electrical equipment.

Q. Existing branch circuits or circuits of other systems passing through Project area that interferes with new construction shall be relocated as required. All relocation of existing circuits shall be coordinated with State of Delaware OMB - Division of Facilities Management and with all other affected trades before proceeding with new construction.

R. Contractor shall be responsible for temporary removal and re-installation of existing ceiling tiles and/or other ceiling access equipment as required to accommodate electrical demolition and/or extension work. Contractor shall be responsible for repair and/or replacement of all ceiling tiles and/or access equipment damaged as result of work. Contractor shall inspect existing conditions prior to commencement of work and provide written report of existing damage to State of Delaware OMB - Division of Facilities Management.

S. Contractor shall be responsible for repair, patching and painting of all holes, dents, cracks, penetrations, etc. or other damage left in surfaces and/or structures after electrical demolition and/or extension work. Surfaces and/or structures to be restored shall include ceilings, walls, floors, columns, roofs, etc. Patching and painting shall restore surfaces and/or structures to original designs and/or finishes, including all fire-resistant and watertight ratings. All openings to building exteriors and through roofs shall be sealed watertight.

T. Repair adjacent construction and finishes damaged during demolition and extension work.

U. Damage caused by Contractor to areas outside area of demolition shall be repaired to original condition by Contractor at no additional cost to State of Delaware OMB - Division of Facilities Management.

V. Maintain access to existing electrical installations that remain active. Modify installation or provide access panel as appropriate.

W. Extend existing installations using materials and methods compatible with existing electrical installations, or as specified.

X. All demolished materials not to be turned over to State of Delaware OMB - Division of Facilities Management shall be removed from site daily. Salvaged materials shall be stored for re-use.

3.04 CLEANING AND REPAIR

A. See Section 01 74 19 - Construction Waste Management and Disposal for additional requirements.

B. Clean and repair existing materials and equipment that remain or that are to be reused.

C. Panelboards: Clean exposed surfaces and check tightness of electrical connections. Replace damaged circuit breakers and provide closure plates for vacant positions. Provide typed circuit directory showing revised circuiting arrangement.

END OF SECTION

This page intentionally left blank

SECTION 26 05 19
LOW-VOLTAGE ELECTRICAL POWER CONDUCTORS AND CABLES

PART 1 GENERAL

1.01 SECTION INCLUDES

A. Wire and cable for 600 volts and less.

B. Single conductor building wire.

C. Metal-clad cable.

D. Wiring connectors.

E. Electrical tape.

F. Heat shrink tubing.

G. Oxide inhibiting compound.

H. Wire pulling lubricant.

I. Cable ties.

J. Firestop sleeves.

1.02 RELATED REQUIREMENTS

A. Section 07 84 00 - Firestopping.

B. Section 26 05 05 - Selective Demolition for Electrical: Disconnection, removal, and/or extension of existing electrical conductors and cables.

C. Section 26 05 26 - Grounding and Bonding for Electrical Systems: Additional requirements for grounding conductors and grounding connectors.

D. Section 26 05 53 - Identification for Electrical Systems: Identification products and requirements.

E. Section 28 46 00 - Fire Detection and Alarm: Fire alarm system conductors and cables.

1.03 REFERENCE STANDARDS

A. ASTM B3 - Standard Specification for Soft or Annealed Copper Wire; 2013.

B. ASTM B8 - Standard Specification for Concentric-Lay-Stranded Copper Conductors, Hard, Medium-Hard, or Soft; 2011.

C. ASTM B33 - Standard Specification for Tin-Coated Soft or Annealed Copper Wire for Electrical Purposes; 2010 (Reapproved 2014).

D. ASTM B787/B787M - Standard Specification for 19 Wire Combination Unilay-Stranded Copper Conductors for Subsequent Insulation; 2004 (Reapproved 2014).

E. ASTM D3005 - Standard Specification for Low-Temperature Resistant Vinyl Chloride Plastic Pressure-Sensitive Electrical Insulating Tape; 2010.

F. ASTM D4388 - Standard Specification for Nonmetallic Semi-Conducting and Electrically Insulating Rubber Tapes; 2013.

G. NECA 1 - Standard for Good Workmanship in Electrical Construction; 2010.

H. NECA 120 - Standard for Installing Armored Cable (AC) and Metal-Clad Cable (MC); 2012.

I. NEMA WC 70 - Nonshielded Power Cable 2000 V or Less for the Distribution of Electrical Energy; 2009.

J. NETA ATS - Acceptance Testing Specifications for Electrical Power Equipment and Systems; 2013.

K. NFPA 70 - National Electrical Code; Most Recent Edition Adopted by Authority Having Jurisdiction, Including All Applicable Amendments and Supplements.

L. UL 44 - Thermoset-Insulated Wires and Cables; Current Edition, Including All Revisions.

M. UL 83 - Thermoplastic-Insulated Wires and Cables; Current Edition, Including All Revisions.

N. UL 267 - Outline of Investigation for Wire-Pulling Compounds; Most Recent Edition, Including All Revisions.

O. UL 486A-486B - Wire Connectors; Current Edition, Including All Revisions.

P. UL 486C - Splicing Wire Connectors; Current Edition, Including All Revisions.

Q. UL 486D - Sealed Wire Connector Systems; Current Edition, Including All Revisions.

R. UL 510 - Polyvinyl Chloride, Polyethylene, and Rubber Insulating Tape; Current Edition, Including All Revisions.

S. UL 1569 - Metal-Clad Cables; Current Edition, Including All Revisions.

1.04 ADMINISTRATIVE REQUIREMENTS

A. Coordination:
   1. Coordinate sizes of raceways, boxes, and equipment enclosures installed under other sections with the actual conductors to be installed, including adjustments for conductor sizes increased for voltage drop.
   2. Coordinate with electrical equipment installed under other sections to provide terminations suitable for use with the conductors to be installed.
   3. Notify DEDC, LLC of any conflicts with or deviations from Contract Documents. Obtain direction before proceeding with work.

1.05 SUBMITTALS

A. See Section 01 30 00 - Administrative Requirements, for submittal procedures.

B. Product Data: Provide manufacturer's standard catalog pages and data sheets for conductors and cables, including detailed information on materials, construction, ratings, listings, and available sizes, configurations, and stranding.

C. Project Record Documents: Record actual installed circuiting arrangements. Record actual routing for underground circuits.

D. Maintenance Materials: Furnish the following for State of Delaware OMB - Division of Facilities Management's use in maintenance of project.
   1. See Section 01 60 00 - Product Requirements, for additional provisions.

1.06 QUALITY ASSURANCE

A. Comply with requirements of NFPA 70.

B. Maintain at the project site a copy of each referenced document that prescribes execution requirements.

C. Manufacturer Qualifications: Company specializing in manufacturing the products specified in this section with minimum three years documented experience.

D. Product Listing Organization Qualifications: An organization recognized by OSHA as a Nationally Recognized Testing Laboratory (NRTL) and acceptable to authorities having jurisdiction.

1.07 DELIVERY, STORAGE, AND HANDLING

A. Receive, inspect, handle, and store conductors and cables in accordance with manufacturer's instructions.

1.08 FIELD CONDITIONS

A. Do not install or otherwise handle thermoplastic-insulated conductors at temperatures lower than 14 degrees F, unless otherwise permitted by manufacturer's instructions. When installation below this temperature is unavoidable, notify DEDC, LLC and obtain direction before proceeding with work.

PART 2 PRODUCTS

2.01 CONDUCTOR AND CABLE APPLICATIONS

A. Do not use conductors and cables for applications other than as permitted by NFPA 70 and product listing.

B. Provide single conductor building wire installed in suitable raceway unless otherwise indicated, permitted, or required.

C. Nonmetallic-sheathed cable is not permitted.

D. Underground feeder and branch-circuit cable is not permitted.

E. Service entrance cable is not permitted.

F. Armored cable is not permitted.

G. Metal-clad cable is permitted only as follows:
   1. Where not otherwise restricted, may be used:
      a. Where concealed above accessible ceilings for final connections from junction boxes to luminaires.
         1) Maximum Length: 6 feet.
      b. Where concealed in hollow stud walls and above accessible ceilings for branch circuits up to 20 A.
   2. In addition to other applicable restrictions, may not be used:
      a. Unless approved by State of Delaware OMB - Division of Facilities Management.
      b. Where not approved for use by the authority having jurisdiction.
      c. Where exposed to view.
      d. Where exposed to damage.
      e. For damp, wet, or corrosive locations.

H. Manufactured wiring systems are not permitted.

I. Conductor & Cable Applications Summary:
   1. Concealed Dry Interior Locations: Use only building wire in raceway or metal clad cable (as permitted above).
   2. Exposed Dry Interior Locations: Use only building wire in raceway.
   3. Above Accessible Ceilings or in Hollow Stud Walls: Use only building wire in raceway or metal clad cable (as permitted above).
   4. Wet or Damp Interior Locations: Use only building wire in raceway.
   5. Exterior Locations: Use only building wire in raceway.

2.02 CONDUCTOR AND CABLE GENERAL REQUIREMENTS

A. Provide products that comply with requirements of NFPA 70.

B. Provide products listed, classified, and labeled as suitable for the purpose intended.

C. Unless specifically indicated to be excluded, provide all required conduit, boxes, wiring, connectors, etc. as required for a complete operating system.

D. Comply with NEMA WC 70.

E. Thermoplastic-Insulated Conductors and Cables: Listed and labeled as complying with UL 83.

F. Thermoset-Insulated Conductors and Cables: Listed and labeled as complying with UL 44.

G. Conductors for Grounding and Bonding: Also comply with Section 26 05 26.

H. Conductors and Cables Installed Exposed in Spaces Used for Environmental Air (only where specifically permitted): Plenum rated, listed and labeled as suitable for use in return air plenums.

I. Provide products with insulation and temperature ratings as required per equipment installation instructions where such ratings differ from those indicated herein.

J. Conductor Material:
   1. Provide copper conductors only. Aluminum conductors are not acceptable for this project. Conductor sizes indicated are based on copper.
   2. Copper Conductors: Soft drawn annealed, 98 percent conductivity, uncoated copper conductors complying with ASTM B3, ASTM B8, or ASTM B787/B787M unless otherwise indicated.
   3. Tinned Copper Conductors: Comply with ASTM B33.

K. Minimum Conductor Size:
   1. Branch Circuits: 12 AWG.
      a. Exceptions: Size homerun branch circuit conductors from power source to first outlet in accordance with the following maximum circuit limits, using center of load served as basis for computing circuit lengths:
         1) 20 A, 120 V circuits longer than 75 feet: 10 AWG, for voltage drop.
         2) 20 A, 120 V circuits longer than 150 feet: 8 AWG, for voltage drop.
   2. Control Circuits: 14 AWG.

L. Where conductor size is not indicated, size to comply with NFPA 70 but not less than applicable minimum size requirements specified.

M. Conductor Color Coding:
   1. Color code conductors as indicated unless otherwise required by the authority having jurisdiction. Maintain consistent color coding throughout project.
   2. Color Coding Method: Integrally colored insulation.
      a. Conductors size 4 AWG and larger may have black insulation color coded using vinyl color coding electrical tape.
   3. Color Code:
      a. 208Y/120 V, 3 Phase, 4 Wire System:
         1) Phase A: Black.
         2) Phase B: Red.
         3) Phase C: Blue.
         4) Neutral/Grounded: White.
      b. Equipment Ground, All Systems: Green.
      c. Travelers for 3-Way and 4-Way Switching: Pink.
      d. For control circuits, comply with manufacturer's recommended color code.

2.03 SINGLE CONDUCTOR BUILDING WIRE

A. Manufacturers:
   1. Copper Building Wire:
      a. Cerro Wire LLC: www.cerrowire.com/#sle.
      b. Encore Wire Corporation: www.encorewire.com/#sle.
      c. General Cable Technologies Corporation: www.generalcable.com/#sle.
      d. Service Wire Co: www.servicewire.com/#sle.
      e. Southwire Company: www.southwire.com/#sle.
      f. Substitutions: See Section 01 60 00 - Product Requirements.

B. Description: Single conductor insulated wire.

C. Conductor Stranding:
   1. Feeders and Branch Circuits:
      a. Size 10 AWG and Smaller: Solid.
      b. Size 8 AWG and Larger: Stranded.
   2. Control Circuits: Stranded.

D. Insulation Voltage Rating: 600 V.

E. Insulation:

1. Copper Building Wire: Type THHN/THWN-2.

2.04 METAL-CLAD CABLE

A. Manufacturers:
   1. AFC Cable Systems Inc: www.afcweb.com/#sle.
   2. Encore Wire Corporation: www.encorewire.com/#sle.
   3. Service Wire Co: www.servicewire.com/#sle.
   4. Southwire Company: www.southwire.com/#sle.
   5. Substitutions: See Section 01 60 00 - Product Requirements.

B. Description: NFPA 70, Type MC cable listed and labeled as complying with UL 1569, and listed for use in classified firestop systems to be used.

C. Conductor Stranding:
   1. Size 10 AWG and Smaller: Solid.
   2. Size 8 AWG and Larger: Stranded.

D. Insulation Voltage Rating: 600 V.

E. Insulation: Type THHN/THWN-2.

F. Provide dedicated neutral conductor for each phase conductor for all single-phase 2-wire circuits requiring a neutral.

G. Grounding: Full-size integral green insulated copper equipment grounding conductor.

H. Armor: Aluminum or steel, interlocked tape.

2.05 WIRING CONNECTORS

A. Description: Wiring connectors appropriate for the application, suitable for use with the conductors to be connected, and listed as complying with UL 486A-486B or UL 486C as applicable.

B. Connectors for Grounding and Bonding: Comply with Section 26 05 26.

C. Wiring Connectors for Splices and Taps:
   1. Copper Conductors Size 8 AWG and Smaller: Use twist-on insulated spring connectors.
   2. Copper Conductors Size 6 AWG and Larger: Use mechanical connectors or compression connectors. Tape uninsulated conductors and connector with electrical tape or insulate with heat shrink tubing to 150 percent of insulation rating of conductor.

D. Wiring Connectors for Non-Motor Terminations:
   1. Provide terminal lugs for connecting conductors to equipment furnished with terminations designed for terminal lugs.
   2. Provide compression adapters for connecting conductors to equipment furnished with mechanical lugs when only compression connectors are specified.
   3. Where over-sized conductors are larger than the equipment terminations can accommodate, provide connectors suitable for reducing to appropriate size, but not less than required for the rating of the overcurrent protective device.
   4. Copper Conductors Size 8 AWG and Larger: Use mechanical connectors or compression connectors where connectors are required.
   5. Stranded Conductors Size 10 AWG and Smaller: Use crimped terminals for connections to terminal screws.
   6. Conductors for Control Circuits: Use crimped terminals where connectors are required.

E. Wiring Connectors for Motor Terminations: Use motor lead disconnects with slip-on insulating boot, pin and silicone gel. Boot sealant shall be used with all insulating boots.

F. Do not use insulation-piercing or insulation-displacement connectors designed for use with conductors without stripping insulation.

G. Do not use push-in wire connectors as a substitute for twist-on insulated spring connectors.

H. Twist-on Insulated Spring Connectors: Rated 600 V, 221 degrees F for standard applications and 302 degrees F for high temperature applications; pre-filled with sealant and listed as complying with UL 486D for damp and wet locations.
   1. Manufacturers:
      a. 3M: www.3m.com/#sle.
      b. Ideal Industries, Inc: www.idealindustries.com/#sle.
      c. NSI Industries LLC: www.nsiindustries.com/#sle.
      d. Substitutions: See Section 01 60 00 - Product Requirements.

I. Mechanical Connectors: Provide bolted type or set-screw type.
   1. Manufacturers:
      a. Burndy LLC: www.burndy.com.
      b. nVent ILSCO: www.ilsco.com/#sle.
      c. Thomas & Betts Corporation; Blackburn Products: www.tnb.com/#sle.
      d. Polaris: www.polarisconnectors.com.
      e. Substitutions: See Section 01 60 00 - Product Requirements.

J. Compression Connectors: Provide circumferential type or hex type crimp configuration.
   1. Manufacturers:
      a. Burndy LLC: www.burndy.com.
      b. nVent ILSCO: www.ilsco.com/#sle.
      c. Thomas & Betts Corporation; Blackburn Products: www.tnb.com/#sle.
      d. Substitutions: See Section 01 60 00 - Product Requirements.

K. Crimped Terminals: Nylon-insulated, with insulation grip and terminal configuration suitable for connection to be made.
   1. Manufacturers:
      a. Burndy LLC: www.burndy.com.
      b. Ilsco: www.ilsco.com/#sle.
      c. Thomas & Betts Corporation; Sta-Kon Products: www.tnb.com/#sle.
      d. Substitutions: See Section 01 60 00 - Product Requirements.

2.06 ACCESSORIES

A. Electrical Tape:
   1. Manufacturers:
      a. 3M: www.3m.com/#sle.
      b. Plymouth Rubber Europa: www.plymouthrubber.com/#sle.
      c. Hellerman Tyton: www.hellermentyton.com/#sle.
      d. Duck Brand: https://www.duckbrand.com/#sle
      e. Substitutions: See Section 01 60 00 - Product Requirements.
   2. Vinyl Color Coding Electrical Tape: Integrally colored to match color code indicated; listed as complying with UL 510; minimum thickness of 7 mil; resistant to abrasion, corrosion, and sunlight; suitable for continuous temperature environment up to 221 degrees F.
   3. Vinyl Insulating Electrical Tape: Complying with ASTM D3005 and listed as complying with UL 510; minimum thickness of 7 mil; resistant to abrasion, corrosion, and sunlight; conformable for application down to 0 degrees F and suitable for continuous temperature environment up to 221 degrees F.
   4. Rubber Splicing Electrical Tape: Ethylene Propylene Rubber (EPR) tape, complying with ASTM D4388; minimum thickness of 30 mil; suitable for continuous temperature environment up to 194 degrees F and short-term 266 degrees F overload service.
   5. Electrical Filler Tape: Rubber-based insulating moldable putty, minimum thickness of 125 mil; suitable for continuous temperature environment up to 176 degrees F.
   6. Moisture Sealing Electrical Tape: Insulating mastic compound laminated to flexible, all-weather vinyl backing; minimum thickness of 90 mil.

B. Heat Shrink Tubing: Heavy-wall, split-resistant, with factory-applied adhesive; rated 600 V; suitable for direct burial applications; listed as complying with UL 486D.
   1. Manufacturers:
      a. 3M: www.3m.com/#sle.
      b. Burndy LLC: www.burndy.com/#sle.
      c. Thomas & Betts Corporation: www.tnb.com/#sle.
      d. Substitutions: See Section 01 60 00 - Product Requirements.

C. Oxide Inhibiting Compound: Listed; suitable for use with the conductors or cables to be installed.
   1. Manufacturers:
      a. Burndy LLC: www.burndy.com/#sle.
      b. Ideal Industries, Inc: www.idealindustries.com/#sle.
      c. Ilsco: www.ilsco.com/#sle.
      d. Substitutions: See Section 01 60 00 - Product Requirements.

D. Wire Pulling Lubricant:
   1. Manufacturers:
      a. 3M: www.3m.com/#sle.
      b. American Polywater Corporation: www.polywater.com/#sle.
      c. Ideal Industries, Inc: www.idealindustries.com/#sle.
      d. Substitutions: See Section 01 60 00 - Product Requirements.
   2. Listed and labeled as complying with UL 267.
   3. Suitable for use with conductors/cables and associated insulation/jackets to be installed.
   4. Suitable for use at installation temperature.
   5. Products:
      a. American Polywater Corporation; Polywater J Cable Pulling Lubricant: www.polywater.com/#sle.
      b. American Polywater Corporation; Polywater LZ Cable Pulling Lubricant: www.polywater.com/#sle.
      c. Substitutions: See Section 01 60 00 - Product Requirements.

E. Cable Ties: Material and tensile strength rating suitable for application.
   1. Manufacturers:
      a. Burndy LLC: www.burndy.com/#sle.
      b. Cable Ties Unlimited: www.cabletiesunlimited.com/#sle.
      c. Cable Ties Plus: www.cabletiesplus.com/#sle.
      d. Substitutions: See Section 01 60 00 - Product Requirements.

F. Firestop Sleeves: Listed; provide as required to preserve fire resistance rating of building elements.
   1. Products:
      a. HoldRite, a brand of Reliance Worldwide Corporation; HydroFlame Pro Series/HydroFlame Custom Built: www.holdrite.com/#sle.
      b. Hilti: www.hilti.com/#sle.
      c. STI Firestop: www.stifirestop.com/#sle.
      d. Substitutions: See Section 01 60 00 - Product Requirements.

PART 3 EXECUTION

3.01 EXAMINATION

A. Verify that interior of building has been protected from weather.

B. Verify that work likely to damage wire and cable has been completed.

C. Verify that raceways, boxes, and equipment enclosures are installed and are properly sized to accommodate conductors and cables in accordance with NFPA 70.

D. Verify that raceway installation is complete and supported.

E. Verify that field measurements are as indicated.

F. Verify that conditions are satisfactory for installation prior to starting work.

3.02 PREPARATION

A. Clean raceways thoroughly to remove foreign materials before installing conductors and cables.

3.03 INSTALLATION

A. Circuiting Requirements:
   1. Unless dimensioned, circuit routing indicated is diagrammatic.
   2. When circuit destination is indicated without specific routing, determine exact routing required.
   3. Arrange circuiting to minimize splices.
   4. Include circuit lengths required to install connected devices within 10 ft of location indicated.
   5. Maintain separation of Class 1, Class 2, and Class 3 remote-control, signaling, and power-limited circuits in accordance with NFPA 70.
   6. Maintain separation of wiring for emergency systems in accordance with NFPA 70.
   7. Circuiting Adjustments: Unless otherwise indicated, when branch circuits are indicated as separate, combining them together in a single raceway is permitted, under the following conditions:
      a. Provide no more than six current-carrying conductors in a single raceway. Dedicated neutral conductors are considered current-carrying conductors.
      b. Increase size of conductors as required to account for ampacity derating.
      c. Size raceways, boxes, etc. to accommodate conductors.
   8. Common Neutrals: Unless otherwise indicated, sharing of neutral/grounded conductors among single phase branch circuits is not permitted. Provide dedicated neutral/grounded conductor for each individual branch circuit.

B. Install products in accordance with manufacturer's instructions.

C. Perform work in accordance with NECA 1 (general workmanship).

D. Install metal-clad cable (Type MC) in accordance with NECA 120.

E. Installation in Raceway:
   1. Swab/clean interiors of new and existing conduits before pulling new conductors.
   2. Remove existing conductors and cables from raceway before pulling in new (where applicable).
   3. Tape ends of conductors and cables to prevent infiltration of moisture and other contaminants.
   4. Use cable pullers to pull conductors through conduits.
   5. Pull all conductors and cables together into raceway at same time.
   6. Do not damage conductors and cables or exceed manufacturer's recommended maximum pulling tension and sidewall pressure.
   7. Use suitable wire pulling lubricant where necessary, except when lubricant is not recommended by the manufacturer.

F. Paralleled Conductors: Install conductors of the same length and terminate in the same manner.

G. Secure and support conductors and cables in accordance with NFPA 70 using suitable supports and methods approved by the authority having jurisdiction. Provide independent support from building structure. Do not provide support from raceways, piping, ductwork, or other systems.

1. Installation Above Suspended Ceilings: Do not provide support from ceiling support system. Do not provide support from ceiling grid or allow conductors and cables to lay on ceiling tiles. Support at 6 foot maximum intervals using type MC cable supports designed and listed for the purpose.
2. Installation in Vertical Raceways: Provide supports where vertical rise exceeds permissible limits.

H. Terminate cables using suitable fittings.
1. Metal-Clad Cable (Type MC):
a. Fittings used for connecting type MC cable to boxes, cabinets or other equipment shall be listed and identified for such use. Snap-in connectors or internal box clamps shall not be permitted. All connectors shall be locknut type, designed to secure type MC cable to boxes or enclosures.
b. Cut cable armor only using specialized tools to prevent damaging conductors or insulation. Do not use hacksaw or wire cutters to cut armor.
c. Do not use direct-bearing set-screw type fittings for cables with aluminum armor.
d. Provide plastic anti-short bushings on ends of all type MC cable.

I. Install conductors with a minimum of 12 inches of slack at each outlet.

J. Neatly train and bundle conductors inside boxes, wireways, panelboards and other equipment enclosures.

K. Group or otherwise identify neutral/grounded conductors with associated ungrounded conductors inside enclosures in accordance with NFPA 70.

L. Make wiring connections using specified wiring connectors.
1. Make splices and taps only in accessible boxes. Do not pull splices into raceways or make splices in conduit bodies or wiring gutters.
2. Remove appropriate amount of conductor insulation for making connections without cutting, nicking or damaging conductors.
3. Do not remove conductor strands to facilitate insertion into connector.
4. Clean contact surfaces on conductors and connectors to suitable remove corrosion, oxides, and other contaminates. Do not use wire brush on plated connector surfaces.
5. Mechanical Connectors: Secure connections according to manufacturer's recommended torque settings.
6. Compression Connectors: Secure connections using manufacturer's recommended tools and dies.

M. Insulate splices and taps that are made with uninsulated connectors using methods suitable for the application, with insulation and mechanical strength at least equivalent to unspliced conductors.
1. Dry Locations: Use insulating covers specifically designed for the connectors, electrical tape, or heat shrink tubing.
a. For taped connections, first apply adequate amount of rubber splicing electrical tape or electrical filler tape, followed by outer covering of vinyl insulating electrical tape.
2. Damp Locations: Use insulating covers specifically designed for the connectors, electrical tape, or heat shrink tubing.
a. For connections with insulating covers, apply outer covering of moisture sealing electrical tape.
b. For taped connections, follow same procedure as for dry locations but apply outer covering of moisture sealing electrical tape.
3. Wet Locations: Use heat shrink tubing.

N. Insulate ends of spare conductors using vinyl insulating electrical tape.

O. Field-Applied Color Coding: Where vinyl color coding electrical tape is used in lieu of integrally colored insulation as permitted in Part 2 under "Color Coding", apply half overlapping turns of tape at each termination and at each location conductors are accessible.

P. Identify conductors and cables in accordance with Section 26 05 53.

Q. Color Code Legend: Provide identification label identifying color code for ungrounded and grounded conductors at each piece of feeder or branch-circuit distribution equipment.

R. Install firestopping to preserve fire resistance rating of partitions and other elements, using materials and methods specified in Section 07 84 00.

S. Unless specifically indicated to be excluded, provide final connections to all equipment and devices, including those furnished by others, as required for a complete operating system.

T. Protect exposed cable from damage.

U. Clean conductor surfaces before installing lugs and connectors.

V. Make splices, taps, and terminations to carry full ampacity of conductors with no perceptible temperature rise.

3.04 FIELD QUALITY CONTROL

A. See Section 01 40 00 - Quality Requirements, for additional requirements.

B. Perform field inspection and testing in accordance with Section 01 40 00 - Quality Requirements.

C. Inspect and test in accordance with NETA ATS, except Section 4.

D. Perform inspections and tests listed in NETA ATS, Section 7.3.2. The insulation resistance test is required for all conductors. The resistance test for parallel conductors listed as optional is not required.

1. Disconnect surge protective devices (SPDs) prior to performing any high potential testing. Replace SPDs damaged by performing high potential testing with SPDs connected.

E. Correct deficiencies and replace damaged or defective conductors and cables.

END OF SECTION

SECTION 26 05 26
GROUNDING AND BONDING FOR ELECTRICAL SYSTEMS

PART 1 GENERAL

1.01 SECTION INCLUDES

A. Grounding and bonding requirements.

B. Conductors for grounding and bonding.

C. Connectors for grounding and bonding.

1.02 RELATED REQUIREMENTS

A. Section 26 05 19 - Low-Voltage Electrical Power Conductors and Cables: Additional requirements for conductors for grounding and bonding, including conductor color coding.
   1. Includes oxide inhibiting compound.

B. Section 26 05 53 - Identification for Electrical Systems: Identification products and requirements.

1.03 REFERENCE STANDARDS

A. IEEE 81 - IEEE Guide for Measuring Earth Resistivity, Ground Impedance, and Earth Surface Potentials of a Grounding System; 2012.

B. NECA 1 - Standard for Good Workmanship in Electrical Construction; 2010.

C. NETA ATS - Acceptance Testing Specifications for Electrical Power Equipment and Systems; 2013.

D. NFPA 70 - National Electrical Code; Most Recent Edition Adopted by Authority Having Jurisdiction, Including All Applicable Amendments and Supplements.

E. UL 467 - Grounding and Bonding Equipment; Current Edition, Including All Revisions.

1.04 ADMINISTRATIVE REQUIREMENTS

A. Coordination:
   1. Verify exact locations of underground metal water service pipe entrances to building.
   2. Notify DEDC, LLC of any conflicts with or deviations from Contract Documents. Obtain direction before proceeding with work.

1.05 SUBMITTALS

A. See Section 01 30 00 - Administrative Requirements for submittals procedures.

B. Product Data: Provide manufacturer's standard catalog pages and data sheets for grounding and bonding system components.

C. Field quality control test reports.

D. Project Record Documents: Record actual locations of grounding electrode system components and connections.

1.06 QUALITY ASSURANCE

A. Comply with requirements of NFPA 70.

B. Maintain at the project site a copy of each referenced document that prescribes execution requirements.

C. Manufacturer Qualifications: Company specializing in manufacturing the products specified in this section with minimum three years documented experience.

D. Product Listing Organization Qualifications: An organization recognized by OSHA as a Nationally Recognized Testing Laboratory (NRTL) and acceptable to authorities having jurisdiction.

1.07 DELIVERY, STORAGE, AND HANDLING

A. Receive, inspect, handle, and store products in accordance with manufacturer's instructions.

PART 2 PRODUCTS

2.01 GROUNDING AND BONDING REQUIREMENTS

A. Do not use products for applications other than as permitted by NFPA 70 and product listing.

B. Unless specifically indicated to be excluded, provide all required components, conductors, connectors, conduit, boxes, fittings, supports, accessories, etc. as necessary for a complete grounding and bonding system.

C. Where conductor size is not indicated, size to comply with NFPA 70 but not less than applicable minimum size requirements specified.

D. Grounding System Resistance:
   1. Achieve specified grounding system resistance under normally dry conditions unless otherwise approved by DEDC, LLC. Precipitation within the previous 48 hours does not constitute normally dry conditions.
   2. Grounding Electrode System: Not greater than 5 ohms to ground, when tested according to IEEE 81 using "fall-of-potential" method.
   3. Between Grounding Electrode System and Major Electrical Equipment Frames, System Neutral, and Derived Neutral Points: Not greater than 0.5 ohms, when tested using "point-to-point" methods.

E. Bonding and Equipment Grounding:
   1. Provide bonding for equipment grounding conductors, equipment ground busses, metallic equipment enclosures, metallic raceways and boxes, device grounding terminals, and other normally non-current-carrying conductive materials enclosing electrical conductors/equipment or likely to become energized as indicated and in accordance with NFPA 70.
   2. Provide green insulated copper equipment grounding conductor in each feeder and branch circuit raceway. Do not use raceways as sole equipment grounding conductor.
   3. Where circuit conductor sizes are increased for voltage drop, increase size of equipment grounding conductor proportionally in accordance with NFPA 70.
   4. Unless otherwise indicated, connect wiring device grounding terminal to branch circuit equipment grounding conductor and to outlet box with bonding jumper.
   5. Terminate branch circuit equipment grounding conductors on solidly bonded equipment ground bus only. Do not terminate on neutral (grounded) or isolated/insulated ground bus.
   6. Provide bonding jumper across expansion or expansion/deflection fittings provided to accommodate conduit movement.
   7. Provide bonding for interior metal air ducts.

F. Communications Systems Grounding and Bonding:
   1. Provide bonding jumper (in raceway if subject to damage) from intersystem bonding termination to each communications room or backboard and leave slack conductor for termination by others.
      a. Bonding Jumper Size: 6 AWG, unless otherwise indicated or required.
      b. Raceway Size: 3/4 inch trade size unless otherwise indicated or required.

2.02 GROUNDING AND BONDING COMPONENTS

A. General Requirements:
   1. Provide products listed, classified, and labeled as suitable for the purpose intended.
   2. Provide products listed and labeled as complying with UL 467 where applicable.

B. Conductors for Grounding and Bonding, in Addition to Requirements of Section 26 05 26:
   1. Use insulated copper conductors unless otherwise indicated.

2. Factory Pre-fabricated Bonding Jumpers: Furnished with factory-installed ferrules; size braided cables to provide equivalent gauge of specified conductors.

C. Connectors for Grounding and Bonding:
1. Description: Connectors appropriate for the application and suitable for the conductors and items to be connected; listed and labeled as complying with UL 467.
2. Unless otherwise indicated, use compression connectors for underground, concealed and other inaccessible connections.
3. Unless otherwise indicated, use mechanical connectors or compression connectors for accessible connections.
4. Manufacturers - Mechanical and Compression Connectors:
a. allG Fabrication: www.allgfab.com/#sle.
b. Burndy LLC: www.burndy.com/#sle.
c. Harger Lightning & Grounding: www.harger.com/#sle.
d. nVent ERICO: www.nvent.com/#sle.
e. Thomas & Betts Corporation: www.tnb.com/#sle.
f. Substitutions: See Section 01 60 00 - Product Requirements.

D. Oxide Inhibiting Compound: Comply with Section 26 05 19.

PART 3 EXECUTION

3.01 EXAMINATION

A. Verify that work likely to damage grounding and bonding system components has been completed.

B. Verify that field measurements are as indicated.

C. Verify that conditions are satisfactory for installation prior to starting work.

D. Verify existing conditions prior to starting work.

3.02 INSTALLATION

A. Install products in accordance with manufacturer's instructions.

B. Perform work in accordance with NECA 1 (general workmanship).

C. Make grounding and bonding connections using specified connectors.
1. Remove appropriate amount of conductor insulation for making connections without cutting, nicking or damaging conductors. Do not remove conductor strands to facilitate insertion into connector.
2. Remove nonconductive paint, enamel, or similar coating at threads, contact points, and contact surfaces.
3. Mechanical Connectors: Secure connections according to manufacturer's recommended torque settings.
4. Compression Connectors: Secure connections using manufacturer's recommended tools and dies.

D. Equipment Grounding Conductors: Provide separate, green insulated copper equipment grounding conductor within each feeder and branch circuit raceway. Terminate each end on suitable lug, bus or bushing.

E. Identify grounding and bonding system components in accordance with Section 26 05 53.

3.03 FIELD QUALITY CONTROL

A. See Section 01 40 00 - Quality Requirements, for additional requirements.

B. Inspect and test in accordance with NETA ATS except Section 4.

C. Perform inspections and tests listed in NETA ATS, Section 7.13.

D. Perform ground electrode resistance tests under normally dry conditions. Precipitation within the previous 48 hours does not constitute normally dry conditions.

E. Investigate and correct deficiencies where measured ground resistances do not comply with specified requirements.

F. Submit detailed reports indicating inspection and testing results and corrective actions taken.

END OF SECTION

SECTION 26 05 29
HANGERS AND SUPPORTS FOR ELECTRICAL SYSTEMS

PART 1 GENERAL

1.01 SECTION INCLUDES

A. Support and attachment requirements and components for equipment, conduit, cable, boxes, and other electrical work.

1.02 RELATED REQUIREMENTS

A. Section 26 05 33.13 - Conduit for Electrical Systems: Additional support and attachment requirements for conduits.

B. Section 26 05 33.16 - Boxes for Electrical Systems: Additional support and attachment requirements for boxes.

C. Section 26 51 00 - Interior Lighting: Additional support and attachment requirements for interior luminaires.

1.03 REFERENCE STANDARDS

A. ASTM A123/A123M - Standard Specification for Zinc (Hot-Dip Galvanized) Coatings on Iron and Steel Products; 2015.

B. ASTM A153/A153M - Standard Specification for Zinc Coating (Hot-Dip) on Iron and Steel Hardware; 2009.

C. ASTM B633 - Standard Specification for Electrodeposited Coatings of Zinc on Iron and Steel; 2013.

D. MFMA-4 - Metal Framing Standards Publication; 2004.

E. NECA 1 - Standard for Good Workmanship in Electrical Construction; 2010.

F. NFPA 70 - National Electrical Code; Most Recent Edition Adopted by Authority Having Jurisdiction, Including All Applicable Amendments and Supplements.

1.04 ADMINISTRATIVE REQUIREMENTS

A. Coordination:
   1. Coordinate sizes and arrangement of supports and bases with actual equipment and components to be installed.
   2. Coordinate work to provide additional framing and materials required for installation.
   3. Coordinate compatibility of support and attachment components with mounting surfaces at installed locations.
   4. Coordinate arrangement of supports with ductwork, piping, equipment and other potential conflicts.
   5. Notify DEDC, LLC of conflicts with or deviations from Contract Documents. Obtain direction before proceeding with work.

B. Sequencing:
   1. Do not install products on or provide attachment to concrete surfaces until concrete has cured; see Section 03 30 00.

1.05 SUBMITTALS

A. See Section 01 30 00 - Administrative Requirements for submittal procedures.

B. Product Data: Provide manufacturer's standard catalog pages and data sheets for channel/strut framing systems and post-installed concrete/masonry anchors.

C. Shop Drawings: Include details for fabricated hangers and supports where materials or methods other than those indicated are proposed for substitution.

1.06 QUALITY ASSURANCE

A. Maintain at project site one copy of each referenced document that prescribes execution requirements.

B. Product Listing Organization Qualifications: Organization recognized by OSHA as Nationally Recognized Testing Laboratory (NRTL) and acceptable to authorities having jurisdiction.

1.07 DELIVERY, STORAGE, AND HANDLING

A. Receive, inspect, handle, and store products in accordance with manufacturer's instructions.

PART 2 PRODUCTS

2.01 SUPPORT AND ATTACHMENT COMPONENTS

A. General Requirements:
   1. Comply with the following. Where requirements differ, comply with most stringent.
      a. NFPA 70.
      b. Applicable building code.
      c. Requirements of authorities having jurisdiction.
   2. Provide required hangers, supports, anchors, fasteners, fittings, accessories, and hardware as necessary for complete installation of electrical work.
   3. Provide products listed, classified, and labeled as suitable for purpose intended, where applicable.
   4. Where support and attachment component types and sizes are not indicated, select in accordance with manufacturer's application criteria as required for the load to be supportedwith a minimum safety factor of five times the applied force. Include consideration for vibration, equipment operation, and shock loads where applicable.
   5. Do not use products for applications other than as permitted by NFPA 70 and product listing.
   6. Do not use wire, chain, perforated pipe strap, or wood for permanent supports unless specifically indicated or permitted.
   7. Steel Components: Use corrosion-resistant materials suitable for environment where installed.
      a. Indoor Dry Locations: Use zinc-plated steel or approved equivalent unless otherwise indicated.
      b. Outdoor and Damp or Wet Indoor Locations: Use galvanized steel, stainless steel, or approved equivalent unless otherwise indicated.
      c. Zinc-Plated Steel: Electroplated in accordance with ASTM B633.
      d. Galvanized Steel: Hot-dip galvanized after fabrication in accordance with ASTM A123/A123M or ASTM A153/A153M.

B. Conduit and Cable Supports: Straps and clamps suitable for conduit or cable to be supported.
   1. Manufacturers:
      a. ABB: www.electrification.us.abb.com/#sle.
      b. Eaton Corporation: www.eaton.com/#sle.
      c. Emerson Electric Co; O-Z/Gedney: www.emerson.com/#sle.
      d. HoldRite, a brand of Reliance Worldwide Corporation: www.holdrite.com/#sle.
      e. Substitutions: See Section 01 60 00 - Product Requirements.
   2. Conduit Straps: One-hole or two-hole type; steel or malleable iron.
   3. Conduit Clamps: Bolted type unless otherwise indicated.
   4. Products:
      a. Gripple, Inc; Universal Bracket: www.gripple.com/#sle.
      b. Gripple, Inc; Fast Trak: www.gripple.com/#sle.
      c. Gripple, Inc; Universal Clamp (Threaded): www.gripple.com/#sle.
      d. Gripple, Inc; Low Profile Bracket Kits: www.gripple.com/#sle.
      e. Substitutions: See Section 01 60 00 - Product Requirements.

C. Outlet Box Supports: Hangers and brackets suitable for boxes to be supported.
   1. Manufacturers:
      a. ABB: www.electrification.us.abb.com/#sle.
      b. Eaton Corporation: www.eaton.com/#sle.
      c. Emerson Electric Co; O-Z/Gedney: www.emerson.com/#sle.
      d. HoldRite, a brand of Reliance Worldwide Corporation: www.holdrite.com/#sle.
      e. Substitutions: See Section 01 60 00 - Product Requirements.

D. Metal Channel/Strut Framing Systems:
   1. Manufacturers:
      a. ABB: www.electrification.us.abb.com/#sle.
      b. Atkore International Inc; Unistrut: www.unistrut.us/#sle.
      c. Eaton Corporation: www.eaton.com/#sle.
      d. Elgen Manufacturing Company, Inc: www.elgenmfg.com/#sle.
      e. Substitutions: See Section 01 60 00 - Product Requirements.
      f. Source Limitations: Furnish channel/strut and associated fittings, accessories, and hardware produced by single manufacturer.
   2. Description: Factory-fabricated, continuous-slot, metal channel/strut and associated fittings, accessories, and hardware required for field assembly of supports.
   3. Comply with MFMA-4.
   4. Channel Material:
      a. Indoor Dry Locations: Use galvanized steel.
      b. Outdoor and Damp or Wet Indoor Locations: Use galvanized steel.
   5. Minimum Channel Thickness: Steel sheet, 12 gauge, 0.1046 inch.
   6. Minimum Channel Dimensions: 1-5/8 inch wide by 13/16 inch high.

E. Hanger Rods: Threaded, zinc-plated steel unless otherwise indicated.
   1. Minimum Size, Unless Otherwise Indicated or Required:
      a. Equipment Supports: 1/2-inch diameter.
      b. Single Conduit up to 1-inch (27 mm) Trade Size: 1/4-inch diameter.
      c. Single Conduit Larger than 1-inch (27 mm) Trade Size: 3/8-inch diameter.
      d. Trapeze Support for Multiple Conduits: 3/8-inch diameter.
      e. Outlet Boxes: 1/4-inch diameter.
      f. Luminaires: 1/4-inch diameter.

F. Anchors and Fasteners:
   1. Manufacturers - Mechanical Anchors:
      a. Dewalt: anchors.dewalt.com/#sle.
      b. Hilti, Inc: www.hilti.com/#sle.
      c. ITW Red Head, a division of Illinois Tool Works, Inc: www.itwredhead.com/#sle.
      d. Simpson Strong-Tie Company Inc: www.strongtie.com/#sle.
      e. Substitutions: See Section 01 60 00 - Product Requirements.
   2. Unless otherwise indicated and where not otherwise restricted, use anchor and fastener types indicated for specified applications.
   3. Concrete: Use preset concrete inserts, expansion anchors, or screw anchors.
   4. Solid or Grout-Filled Masonry: Use expansion anchors or screw anchors.
   5. Hollow Masonry: Use toggle bolts.
   6. Hollow Stud Walls: Use toggle bolts.
   7. Steel: Use beam clamps, machine bolts, or welded threaded studs.
   8. Sheet Metal: Use sheet metal screws.
   9. Wood: Use wood screws.
   10. Plastic and lead anchors are not permitted.
   11. Post-Installed Concrete and Masonry Anchors: Evaluated and recognized by ICC Evaluation Service, LLC (ICC-ES) for compliance with applicable building code.

2.02 MATERIALS

A. Hangers, Supports, Anchors, and Fasteners - General: Corrosion-resistant materials of size and type adequate to carry the loads of equipment and conduit, including weight of wire in conduit.

B. Supports: Fabricated of structural steel or formed steel members; galvanized.

C. Anchors and Fasteners:

	Drop in Sleeve Anchors	Expansion Machine Bolt Anchors	Lag Shield Anchors	Nail-in Anchors	Toggle Bolts	Hollow Wall Anchors	Power Driven Studs
Brick	X	X	X	X			X
Concrete	X	X	X	X			X
Concrete Block	X		X	X	X		
Cinder Block		X			X	X	
Stone	X	X		X			X
Marble	X		X				
Building Tile		X			X	X	
Ceramic Tile		X			X		
Terrazzo		X		X			
Terra Cotta		X			X	X	
Plaster					X	X	
Drywall				X	X		
Slate		X			X		
Steel							X

ANCHOR HARDWARE TABLE

PART 3 EXECUTION

3.01 EXAMINATION

A. Verify that field measurements are as indicated.

B. Verify that mounting surfaces are ready to receive support and attachment components.

C. Verify that conditions are satisfactory for installation prior to starting work.

3.02 INSTALLATION

A. Install products in accordance with manufacturer's instructions.

B. Install hangers and supports in accordance with NECA 1.

C. Install anchors and fasteners in accordance with ICC Evaluation Services, LLC (ICC-ES) evaluation report conditions of use where applicable.

D. Provide independent support from building structure. Do not provide support from piping, ductwork, or other systems.

E. Unless specifically indicated or approved by DEDC, LLC, do not provide support from suspended ceiling support system or ceiling grid.

F. Unless specifically indicated or approved by DEDC, LLC, do not provide support from roof deck.

G. Do not penetrate or otherwise notch or cut structural members without approval of Structural Engineer.

H. Equipment Support and Attachment:
   1. Use metal, fabricated supports or supports assembled from metal channel/strut to support equipment as required.
   2. Use metal channel/strut secured to studs to support equipment surface mounted on hollow stud walls when wall strength is not sufficient to resist pull-out.
   3. Use metal channel/strut to support surface-mounted equipment in wet or damp locations to provide space between equipment and mounting surface.
   4. Securely fasten floor-mounted equipment. Do not install equipment such that it relies on its own weight for support.

I. Conduit Support and Attachment: See Section 26 05 33.13 for additional requirements.

J. Box Support and Attachment: See Section 26 05 33.16 for additional requirements.

K. Interior Luminaire Support and Attachment: See Section 26 51 00 for additional requirements.

L. Secure fasteners in accordance with manufacturer's recommended torque settings.

M. Remove temporary supports.

N. Identify independent electrical component support wires above accessible ceilings with color distinguishable from ceiling support wires in accordance with NFPA 70.

3.03 FIELD QUALITY CONTROL

A. See Section 01 40 00 - Quality Requirements for additional requirements.

B. Inspect support and attachment components for damage and defects.

C. Repair cuts and abrasions in galvanized finishes using zinc-rich paint recommended by manufacturer. Replace components that exhibit signs of corrosion.

D. Correct deficiencies and replace damaged or defective support and attachment components.

E. Install hangers and supports as required to adequately and securely support electrical system components, in a neat and workmanlike manner, as specified in NECA 1.
   1. Do not fasten supports to pipes, ducts, mechanical equipment, or conduit.
   2. Do not drill or cut structural members.

F. Rigidly weld support members or use hexagon-head bolts to present neat appearance with adequate strength and rigidity. Use spring lock washers under all nuts.

G. Install surface-mounted cabinets and panelboards with minimum of four anchors.

H. In wet and damp locations use steel channel supports to stand cabinets and panelboards 1-5/8" off wall.

I. Use sheet metal channel to bridge studs above and below cabinets and panelboards recessed in hollow partitions.

END OF SECTION

This page intentionally left blank

SECTION 26 05 33.13
CONDUIT FOR ELECTRICAL SYSTEMS

PART 1 GENERAL

1.01 SECTION INCLUDES

A. Galvanized steel rigid metal conduit (RMC).

B. Flexible metal conduit (FMC).

C. Liquidtight flexible metal conduit (LFMC).

D. Galvanized steel electrical metallic tubing (EMT).

E. Conduit fittings and conduit bodies.

1.02 RELATED REQUIREMENTS

A. Section 26 05 19 - Low-Voltage Electrical Power Conductors and Cables: Metal clad cable (Type MC), including uses permitted.

B. Section 26 05 26 - Grounding and Bonding for Electrical Systems.
   1. Includes additional requirements for fittings for grounding and bonding.

C. Section 26 05 29 - Hangers and Supports for Electrical Systems.

D. Section 26 05 33.16 - Boxes for Electrical Systems.

E. Section 26 05 53 - Identification for Electrical Systems: Identification products and requirements.

1.03 REFERENCE STANDARDS

A. ANSI C80.1 - American National Standard for Electrical Rigid Steel Conduit (ERSC); 2005.

B. ANSI C80.3 - American National Standard for Steel Electrical Metallic Tubing (EMT); 2005.

C. NECA 101 - Standard for Installing Steel Conduits (Rigid, IMC, EMT); 2013.

D. NEMA FB 1 - Fittings, Cast Metal Boxes, and Conduit Bodies for Conduit, Electrical Metallic Tubing, and Cable; 2012.

E. NFPA 70 - National Electrical Code; Most Recent Edition Adopted by Authority Having Jurisdiction, Including All Applicable Amendments and Supplements.

F. UL 1 - Flexible Metal Conduit; Current Edition, Including All Revisions.

G. UL 6 - Electrical Rigid Metal Conduit-Steel; Current Edition, Including All Revisions.

H. UL 360 - Liquid-Tight Flexible Steel Conduit; Current Edition, Including All Revisions.

I. UL 514B - Conduit, Tubing, and Cable Fittings; Current Edition, Including All Revisions.

J. UL 797 - Electrical Metallic Tubing-Steel; Current Edition, Including All Revisions.

K. UL 2419 - Outline of Investigation for Electrically Conductive Corrosion Resistant Compounds; Current Edition, Including All Revisions.

1.04 ADMINISTRATIVE REQUIREMENTS

A. Coordination:
   1. Coordinate minimum sizes of conduits with actual type and quantity of conductors to be installed, including adjustments for conductor sizes increased for voltage drop.
   2. Coordinate arrangement of conduits with structural members, ductwork, piping, equipment, and other potential conflicts.
   3. Verify exact conduit termination locations required for boxes, enclosures, and equipment.
   4. Notify DEDC, LLC of conflicts with or deviations from Contract Documents. Obtain direction before proceeding with work.

B. Sequencing:

1. Do not begin installation of conductors and cables until installation of conduit between termination points is complete.

1.05 SUBMITTALS

A. See Section 01 30 00 - Administrative Requirements for submittals procedures.

B. Product Data: Provide manufacturer's standard catalog pages and data sheets for conduits and fittings.

C. Project Record Documents: Record actual routing for conduits 2 inch (53 mm) trade size and larger.

1.06 QUALITY ASSURANCE

A. Documents at Project Site: Maintain at project site one copy of manufacturer's instructions and shop drawings.

B. Product Listing Organization Qualifications: Organization recognized by OSHA as Nationally Recognized Testing Laboratory (NRTL) and acceptable to authorities having jurisdiction.

1.07 DELIVERY, STORAGE, AND HANDLING

A. See Section 01 74 19 - Construction Waste Management and Disposal for packaging waste requirements.

B. Receive, inspect, handle, and store conduit and fittings in accordance with manufacturer's instructions.

C. Accept conduit on site. Inspect for damage.

D. Protect conduit from corrosion and entrance of debris by storing above grade. Provide appropriate covering.

PART 2 PRODUCTS

2.01 CONDUIT APPLICATIONS

A. Do not use conduit and associated fittings for applications other than as permitted by NFPA 70, manufacturer's instructions, and product listing.

B. Unless otherwise indicated and where not otherwise restricted, use conduit types indicated for specified applications. Where more than one listed application applies, comply with most restrictive requirements. Where conduit type for particular application is not specified, use galvanized steel rigid metal conduit.

C. Concealed Within Masonry Walls: Use electrical metallic tubing (EMT).

D. Concealed Within Hollow Stud Walls: Use electrical metallic tubing (EMT).

E. Concealed Above Accessible Ceilings: Use electrical metallic tubing (EMT).

F. Interior, Damp or Wet Locations: Use galvanized steel rigid metal conduit (RMC).

G. Exposed, Interior (including unfinished spaces), Not Subject to Physical Damage: Use electrical metallic tubing (EMT).

H. Exposed, Interior (including unfinished spaces), Subject to Physical Damage: Use galvanized steel rigid metal conduit.
   1. Locations subject to physical damage include, but are not limited to:
      a. Where exposed below 8 feet, except within electrical and communication rooms or closets.
      b. Where exposed below 20 feet in warehouse areas.

I. Exposed, Exterior: Use galvanized steel rigid metal conduit.

J. Concealed, Exterior, Not Embedded in Concrete or in Contact With Earth: Use galvanized steel rigid metal conduit.

K. Flexible Connections to Luminaires Above Accessible Ceilings: Use flexible metal conduit (FMC).
   1. Maximum Length: 6 feet.

L. Flexible Connections to Vibrating Equipment:
   1. Dry Locations: Use flexible metal conduit (FMC).
   2. Damp, Wet, or Corrosive Locations: Use liquidtight flexible metal conduit (LFMC).
   3. Maximum Length: 18 inches unless otherwise indicated.
   4. Vibrating equipment includes, but is not limited to:
      a. Transformers.
      b. Motors.

M. Other Applications where Flexible Connections to Equipment are Required:
   1. Dry Locations: Use flexible metal conduit (FMC).
   2. Damp, Wet, or Corrosive Locations: Use liquidtight flexible metal conduit (LFMC).
   3. Maximum Length: 18 inches unless otherwise indicated.

N. Fished in Existing Walls, Where Necessary: Use flexible metal conduit.

2.02 CONDUIT - GENERAL REQUIREMENTS

A. Comply with NFPA 70.

B. Existing Work: Where existing conduits are indicated to be reused, they may be reused only where they comply with specified requirements, are free from corrosion, and integrity is verified by pulling mandrel through them.

C. Fittings for Grounding and Bonding: See Section 26 05 26 for additional requirements.

D. Provide conduit, fittings, supports, and accessories required for complete raceway system.

E. Provide products listed, classified, and labeled as suitable for purpose intended.

F. Minimum Conduit Size, Unless Otherwise Indicated:
   1. Branch Circuits: 3/4-inch trade size.
   2. Branch Circuit Homeruns: 3/4-inch trade size.
   3. Control Circuits: 1/2-inch trade size.
   4. Flexible Connections to Luminaires: 3/8-inch trade size.

G. Where conduit size is not indicated, size to comply with NFPA 70 but not less than applicable minimum size requirements specified.

2.03 GALVANIZED STEEL RIGID METAL CONDUIT (RMC)

A. Manufacturers:
   1. Allied Tube & Conduit, a division of Atkore International: www.alliedeg.com/#sle.
   2. Nucor Tubular Products: www.nucortubular.com/#sle.
   3. Rymco USA: www.rymcousa.com/#sle.
   4. Western Tube, a division of Zekelman Industries: www.westerntube.com/#sle.
   5. Wheatland Tube, a division of Zekelman Industries: www.wheatland.com/#sle.
   6. Substitutions: See Section 01 60 00 - Product Requirements.

B. Description: NFPA 70, Type RMC galvanized steel rigid metal conduit complying with ANSI C80.1 and listed and labeled as complying with UL 6.

C. Fittings:
   1. Manufacturers:
      a. ABB; T&B: www.electrification.us.abb.com/#sle.
      b. Allied Tube & Conduit, a division of Atkore International: www.alliedeg.us/#sle.
      c. Bridgeport Fittings Inc: www.bptfittings.com/#sle.
      d. Emerson Electric Co; O-Z/Gedney: www.emerson.com/#sle.
      e. Substitutions: See Section 01 60 00 - Product Requirements.

2. Nonhazardous Locations: Use fittings complying with NEMA FB 1 and listed and labeled as complying with UL 514B or UL 6.
3. Material: Use steel or malleable iron.
   a. Do not use die cast zinc fittings.
4. Connectors and Couplings: Use threaded type fittings only. Threadless fittings, including set screw and compression/gland types, are not permitted.

2.04 FLEXIBLE METAL CONDUIT (FMC)

A. Manufacturers:
   1. AFC Cable Systems, Inc: www.afcweb.com/#sle.
   2. Electri-Flex Company: www.electriflex.com/#sle.
   3. International Metal Hose: www.metalhose.com/#sle.
   4. Substitutions: See Section 01 60 00 - Product Requirements.

B. Description: NFPA 70, Type FMC standard-wall steel flexible metal conduit listed and labeled as complying with UL 1, and listed for use in classified firestop systems.

C. Fittings:
   1. Manufacturers:
      a. ABB; T&B: www.electrification.us.abb.com/#sle.
      b. Bridgeport Fittings, LLC: www.bptfittings.com/#sle.
      c. Emerson Electric Co; O-Z/Gedney: www.emerson.com/#sle.
      d. Substitutions: See Section 01 60 00 - Product Requirements.
   2. Description: Fittings complying with NEMA FB 1 and listed and labeled as complying with UL 514B.
   3. Material: Use steel or malleable iron.
      a. Do not use die cast zinc fittings.

2.05 LIQUIDTIGHT FLEXIBLE METAL CONDUIT (LFMC)

A. Manufacturers:
   1. AFC Cable Systems, Inc: www.afcweb.com/#sle.
   2. Electri-Flex Company: www.electriflex.com/#sle.
   3. International Metal Hose: www.metalhose.com/#sle.
   4. Substitutions: See Section 01 60 00 - Product Requirements.

B. Description: NFPA 70, Type LFMC polyvinyl chloride (PVC) jacketed steel flexible metal conduit listed and labeled as complying with UL 360.

C. Fittings:
   1. Manufacturers:
      a. ABB; T&B: www.electrification.us.abb.com/#sle.
      b. Bridgeport Fittings, LLC: www.bptfittings.com/#sle.
      c. Emerson Electric Co; O-Z/Gedney: www.emerson.com/#sle.
      d. Substitutions: See Section 01 60 00 - Product Requirements.
   2. Description: Fittings complying with NEMA FB 1 and listed and labeled as complying with UL 514B.
   3. Material: Use steel or malleable iron.
      a. Do not use die cast zinc fittings.

2.06 GALVANIZED STEEL ELECTRICAL METALLIC TUBING (EMT)

A. Manufacturers:
   1. Allied Tube & Conduit: www.alliedeg.com.
   2. Nucor Tubular Products: www.nucortubular/#sle.
   3. Rymco USA: www.rymcousa.com/#sle.
   4. Western Tube, a division of Zekelman Industries: www.westerntube.com/#sle.
   5. Wheatland Tube Company: www.wheatland.com/#sle.

6. Substitutions: See Section 01 60 00 - Product Requirements.

B. Description: NFPA 70, Type EMT galvanized steel electrical metallic tubing complying with ANSI C80.3 and listed and labeled as complying with UL 797.

C. Fittings:
1. Manufacturers:
a. ABB; T&B: www.electrification.us.abb.com/#sle.
b. Allied Tube & Conduit, a division of Atkore International: www.alliedeg.us/#sle.
c. Bridgeport Fittings, LLC: www.bptfittings.com/#sle.
d. Emerson Electric Co; O-Z/Gedney: www.emerson.com/#sle.
e. Substitutions: See Section 01 60 00 - Product Requirements.
2. Description: Fittings complying with NEMA FB 1 and listed and labeled as complying with UL 514B.
3. Material: Use steel or malleable iron.
a. Do not use die cast zinc fittings.
4. Connectors and Couplings: Use compression (gland) type.
a. Do not use indenter type connectors and couplings.
b. Do not use set-screw type connectors and couplings.

2.07 ACCESSORIES

A. Conduit Joint Compound: Corrosion-resistant, electrically conductive compound listed as complying with UL 2419; suitable for use with conduit to be installed.

B. Pull Strings: Use nylon or polyester tape with average breaking strength of not less than 1,250 lbf.

C. Foam Conduit Sealant:
1. Removable, two-part, closed-cell foam, specifically designed for sealing conduit openings against water, moisture, gases, and dust.
2. Suitable for use with conductors/cables and associated insulation/jackets to be installed.
3. Rated to hold minimum of 10 ft water head pressure.
4. Products:
a. American Polywater Corporation; Polywater AFT Foam Duct Sealant: www.polywater.com/#sle.
b. American Polywater Corporation; Polywater FST Foam Duct Sealant: www.polywater.com/#sle.
c. Substitutions: See Section 01 60 00 - Product Requirements.

D. Sealing Systems for Concrete Penetrations:
1. Sleeves: Provide water stop ring or cement coating that bonds to concrete to prevent water infiltration.
2. Rate for minimum of 40 psig; suitable for sealing around conduits to be installed.
3. Products:
a. American Polywater Corporation; PZVR Cement-Coated Concrete Wall Sleeves: www.polywater-haufftechnik.com/#sle.
b. American Polywater Corporation; PHSD Mechanical Seals: www.polywater-haufftechnik.com/#sle.
c. American Polywater Corporation; PHSI 150 Varia Double Wall Inserts: www.polywater-haufftechnik.com/#sle.
d. American Polywater Corporation; PGKD Modular Seals: www.polywater-haufftechnik.com/#sle.
e. Substitutions: See Section 01 60 00 - Product Requirements.

E. Firestop Sleeves: Listed; provide as required to preserve fire resistance rating of building elements.
1. Products:

a. HoldRite, a brand of Reliance Worldwide Corporation; HydroFlame Pro Series/HydroFlame Custom Built: www.holdrite.com/#sle.
b. Substitutions: See Section 01 60 00 - Product Requirements.

PART 3 EXECUTION

3.01 EXAMINATION

A. Verify that field measurements are as indicated.
B. Verify that mounting surfaces are ready to receive conduits.
C. Verify that conditions are satisfactory for installation prior to starting work.

3.02 INSTALLATION

A. Install products in accordance with manufacturer's instructions.
B. All conduit penetrations into equipment enclosures shall be made by the Electrical Contractor.
C. Install conduit securely in a neat and workmanlike manner in accordance with NECA 1.
D. Galvanized Steel Rigid Metal Conduit (RMC): Install in accordance with NECA 101.
E. Conduit Routing:
1. Unless dimensioned, conduit routing indicated is diagrammatic.
2. When conduit destination is indicated without specific routing, determine exact routing required.
3. Conceal all conduits within finished walls, ceilings and floors unless specifically indicated to be exposed.
4. Conduits in the following areas may be exposed, unless otherwise indicated:
a. Electrical rooms.
b. Mechanical equipment rooms.
c. Within joists in areas with no ceiling.
5. Unless otherwise approved, do not route exposed conduits:
a. Across floors.
b. Across roofs.
c. Across top of parapet walls.
d. Across building exterior surfaces.
6. Arrange conduit to maintain adequate headroom, clearances, and access.
7. Arrange conduit to provide no more than the equivalent of four 90 degree bends between pull points. Use conduit bodies to make sharp changes in direction, as around beams. Use hydraulic one-shot bender to fabricate bends in metal conduit larger than 2 inch size.
8. Arrange conduit to provide no more than 150 feet between pull points.
9. Route conduits above water and drain piping where possible.
10. Arrange conduit to prevent moisture traps. Provide drain fittings at low points and at sealing fittings where moisture may collect.
11. Maintain minimum clearance of 6 inches between conduits and piping for other systems.
12. Maintain minimum clearance of 12 inches between conduits and hot surfaces. This includes, but is not limited to:
a. Heaters.
b. Hot water piping.
c. Flues.
13. Group parallel conduits in same area on common rack.
F. Conduit Support:
1. Secure and support conduits in accordance with NFPA 70 using suitable supports and methods approved by authorities having jurisdiction; see Section 26 05 29.
2. Provide independent support from building structure. Do not provide support from piping, ductwork, or other systems.

3. Installation Above Suspended Ceilings: Do not provide support from ceiling support system. Do not provide support from ceiling grid or allow conduits to lay on ceiling tiles.
4. Use conduit strap to support single surface-mounted conduit.
   a. Use clamp back spacer with conduit strap for damp and wet locations to provide space between conduit and mounting surface.
5. Use metal channel/strut with accessory conduit clamps to support multiple parallel surface-mounted conduits.
6. Use conduit clamp to support single conduit from beam clamp or threaded rod.
7. Use trapeze hangers assembled from threaded rods and metal channel/strut with accessory conduit clamps to support multiple parallel suspended conduits.
8. Use of spring steel conduit clips for support of conduits is not permitted.
9. Use of wire for support of conduits is not permitted. Remove all wire used for temporary supports.
10. Use of perforated pipe straps for support of conduits is not permitted.
11. Where conduit support intervals specified in NFPA 70 and NECA standards differ, comply with most stringent requirements.

G. Connections and Terminations:
1. Use fittings compatible with conduit used and suitable for location.
2. Use approved zinc-rich paint or conduit joint compound on field-cut threads of galvanized steel conduits prior to making connections.
3. Where two threaded conduits must be joined and neither can be rotated, use three-piece couplings or split couplings. Do not use running threads.
4. Use suitable adapters where required to transition from one type of conduit to another.
5. Provide drip loops for liquidtight flexible conduit connections to prevent drainage of liquid into connectors.
6. Terminate threaded conduits in boxes and enclosures using threaded hubs or double lock nuts for dry locations and raintight hubs for wet locations.
7. Provide insulating bushings, insulated throats, or listed metal fittings with smooth, rounded edges at conduit terminations to protect conductors.
8. Bring conduit to shoulders of fittings. Secure joints and connections tightly to provide maximum mechanical strength and electrical continuity. Use bonding bushings or wedges at connections subject to vibration.

H. Penetrations:
1. Do not penetrate or otherwise notch or cut structural members, including footings and grade beams, without approval of Structural Engineer.
2. All penetrations through floors or walls shall be core-drilled. Use of jack hammers shall not be permitted. Maximum hole diameters shall not exceed 6 inches. All holes shall be spaced at least 18 inches apart in all directions. Re-use of existing penetrations shall be permitted.
3. Prior to any core drilling through floors or walls, the Electrical Contractor shall visually survey both sides to determine if any pipes, ducts or electrical utilities exist that may present obstacles. The Electrical Contractor shall also indentify locations of existing concrete slab reinforcement or in-slab utilities using a pachometer, x-ray or similar device. All core-drilled penetrations shall be a minimum of 3 inches away from existing concrete slab reinforcement or in-slab utilities.
4. Make penetrations perpendicular to surfaces unless otherwise indicated.
5. Provide steel sleeves for penetrations as indicated or as required to facilitate installation. Set sleeves flush with exposed surfaces unless otherwise indicated or required.
6. Where conduits penetrate waterproof membrane, seal as required to maintain integrity of membrane.
7. Provide metal escutcheon plates for conduit penetrations exposed to public view.

8. Install firestopping to preserve fire resistance rating of partitions and other elements, using materials and methods specified in Section 07 84 00.

I. Conduit Movement Provisions: Where conduits are subject to movement, provide expansion and expansion/deflection fittings or approved flexible connections to prevent damage to enclosed conductors or connected equipment. This includes, but is not limited to:

J. Conduit Sealing:
1. Use foam conduit sealant to prevent entry of moisture and gases. This includes, but is not limited to:
   a. Where conduits enter building from outside.
   b. Where service conduits enter building from underground distribution system.
   c. Where conduits enter building from underground.
   d. Where conduits may transport moisture to contact live parts.
2. Where conduits cross barriers between areas of potential substantial temperature differential, use foam conduit sealant at accessible point near penetration to prevent condensation. This includes, but is not limited to:
   a. Where conduits pass from outdoors into conditioned interior spaces.
   b. Where conduits pass from unconditioned interior spaces into conditioned interior spaces.

K. Provide pull string in each empty conduit and in conduits where conductors and cables are to be installed by others. Leave minimum slack of 12 inches at each end.

L. Provide grounding and bonding of conduit in accordance with Section 26 05 26.

M. Identify conduits; see Section 26 05 53.

3.03 FIELD QUALITY CONTROL

A. See Section 01 40 00 - Quality Requirements for additional requirements.

B. Repair cuts and abrasions in galvanized finishes using zinc-rich paint recommended by manufacturer. Replace components that exhibit signs of corrosion.

C. Correct deficiencies and replace damaged or defective conduits.

3.04 CLEANING

A. Clean interior of conduits to remove moisture and foreign matter.

3.05 PROTECTION

A. Immediately after installation of conduit, use suitable manufactured plugs to provide protection from entry of moisture and foreign material and do not remove until ready for installation of conductors.

B. Arrange supports to prevent misalignment during wiring installation.

C. Cut conduit square using saw or pipecutter; de-burr cut ends.

END OF SECTION

SECTION 26 05 33.16
BOXES FOR ELECTRICAL SYSTEMS

PART 1 GENERAL

1.01 SECTION INCLUDES

A. Outlet and device boxes up to 100 cubic inches, including those used as junction and pull boxes.

B. Cabinets and enclosures, including junction and pull boxes larger than 100 cubic inches.

1.02 RELATED REQUIREMENTS

A. Section 07 84 00 - Firestopping.

B. Section 26 05 26 - Grounding and Bonding for Electrical Systems.

C. Section 26 05 29 - Hangers and Supports for Electrical Systems.

D. Section 26 05 33.13 - Conduit for Electrical Systems:
   1. Conduit bodies and other fittings.
   2. Additional requirements for locating boxes to limit conduit length and/or number of bends between pulling points.

E. Section 26 05 53 - Identification for Electrical Systems: Identification products and requirements.

F. Section 26 27 26 - Wiring Devices:
   1. Wall plates.
   2. Additional requirements for locating boxes for wiring devices.

G. Section 27 10 00 - Structured Cabling for Voice and Data (DTI): Additional requirements for communications systems outlet boxes.

1.03 REFERENCE STANDARDS

A. NECA 1 - Standard for Good Workmanship in Electrical Construction; 2010.

B. NECA 130 - Standard for Installing and Maintaining Wiring Devices; 2010.

C. NEMA EN 10250 - Enclosures for Electrical Equipment (1000 Volts Maximum); 2024.

D. NEMA FB 1 - Fittings, Cast Metal Boxes, and Conduit Bodies for Conduit, Electrical Metallic Tubing, and Cable; 2012.

E. NFPA 70 - National Electrical Code; Most Recent Edition Adopted by Authority Having Jurisdiction, Including All Applicable Amendments and Supplements.

F. UL 50 - Enclosures for Electrical Equipment, Non-Environmental Considerations; Current Edition, Including All Revisions.

G. UL 50E - Enclosures for Electrical Equipment, Environmental Considerations; Current Edition, Including All Revisions.

H. UL 508A - Industrial Control Panels; Current Edition, Including All Revisions.

I. UL 514A - Metallic Outlet Boxes; Current Edition, Including All Revisions.

1.04 ADMINISTRATIVE REQUIREMENTS

A. Coordination:
   1. Coordinate the work with other trades to avoid placement of ductwork, piping, equipment, or other potential obstructions within the dedicated equipment spaces and working clearances for electrical equipment required by NFPA 70.
   2. Coordinate arrangement of electrical equipment with the dimensions and clearance requirements of the actual equipment to be installed.
   3. Coordinate minimum sizes of boxes with the actual installed arrangement of conductors, clamps, support fittings, and devices, calculated according to NFPA 70.

4. Coordinate minimum sizes of pull boxes with the actual installed arrangement of connected conduits, calculated according to NFPA 70.
5. Coordinate the placement of boxes with millwork, furniture, devices, equipment, etc. installed under other sections or by others.
6. Coordinate the work with other trades to preserve insulation integrity.
7. Coordinate the work with other trades to provide walls suitable for installation of flush-mounted boxes where indicated.
8. Notify DEDC, LLC of any conflicts with or deviations from Contract Documents. Obtain direction before proceeding with work.

1.05 SUBMITTALS

A. See Section 01 30 00 - Administrative Requirements, for submittal procedures.

B. Product Data: Provide manufacturer's standard catalog pages and data sheets for outlet and device boxes and junction and pull boxes.

C. Project Record Documents: Record actual locations for pull boxes.

D. Maintenance Materials: Furnish the following for State of Delaware OMB - Division of Facilities Management's use in maintenance of project.
   1. See Section 01 60 00 - Product Requirements, for additional provisions.

1.06 QUALITY ASSURANCE

A. Comply with requirements of NFPA 70.

B. Maintain at the project site a copy of each referenced document that prescribes execution requirements.

C. Product Listing Organization Qualifications: An organization recognized by OSHA as a Nationally Recognized Testing Laboratory (NRTL) and acceptable to authorities having jurisdiction.

1.07 DELIVERY, STORAGE, AND HANDLING

A. Receive, inspect, handle, and store products in accordance with manufacturer's instructions.

PART 2 PRODUCTS

2.01 BOXES

A. General Requirements:
   1. Do not use boxes and associated accessories for applications other than as permitted by NFPA 70 and product listing.
   2. Provide all boxes, fittings, supports, and accessories required for a complete raceway system and to accommodate devices and equipment to be installed.
   3. Provide products listed, classified, and labeled as suitable for the purpose intended.
   4. Where box size is not indicated, size to comply with NFPA 70 but not less than applicable minimum size requirements specified.
   5. Provide grounding terminals within boxes where equipment grounding conductors terminate.

B. Outlet and Device Boxes Up to 100 cubic inches, Including Those Used as Junction and Pull Boxes:
   1. Use sheet-steel boxes for concealed interior dry locations unless otherwise indicated or required.
   2. Use cast iron boxes or cast aluminum boxes for exposed interior dry locations, and for interior and exterior damp or wet locations unless otherwise indicated or required; furnish with compatible weatherproof gasketed covers.
   3. Use cast iron boxes or cast aluminum boxes where exposed galvanized steel rigid metal conduit is used.
   4. Use suitable concrete type boxes where flush-mounted in concrete.

5. Use suitable masonry type boxes where flush-mounted in masonry walls.
6. Use raised covers suitable for the type of wall construction and device configuration where required.
7. Use shallow boxes where required by the type of wall construction.
8. Do not use "through-wall" boxes designed for access from both sides of wall.
9. Cast Metal Boxes: Comply with NEMA FB 1, and list and label as complying with UL 514A; furnish with threaded hubs.
10. Boxes for Supporting Luminaires and Ceiling Fans: Listed as suitable for the type and weight of load to be supported; furnished with fixture stud to accommodate mounting of luminaire where required.
11. Boxes for Ganged Devices: Use multigang boxes of single-piece construction. Do not use field-connected gangable boxes unless specifically indicated or permitted.
12. Minimum Box Size, Unless Otherwise Indicated:
    a. Junction Boxes: 4 inch square by 2-1/8 inch deep (100 by 54 mm) trade size.
    b. Wiring Devices: 4 inch square by 2-1/8 inch deep (100 by 54 mm) trade size.
    c. Communications Systems Outlets: 4 inch square by 2-1/8 inch (100 by 54 mm) trade size.
    d. Ceiling Outlets: 4 inch octagonal or square by 2-1/8 inch deep (100 by 54 mm) trade size.
13. Wall Plates: Comply with Section 26 27 26.
14. Manufacturers:
    a. Cooper Crouse-Hinds, a division of Eaton Corporation: www.cooperindustries.com/#sle.
    b. Hubbell Incorporated; Bell Products: www.hubbell-rtb.com/#.
    c. Hubbell Incorporated; RACO Products: www.hubbell-rtb.com/#sle.
    d. O-Z/Gedney, a brand of Emerson Electric Co: www.emerson.com/#sle.
    e. Thomas & Betts Corporation; Steel City Products: www.tnb.com/#sle.
    f. Substitutions: See Section 01 60 00 - Product Requirements.

C. Cabinets and Enclosures, Including Junction and Pull Boxes Larger Than 100 cubic inches:
1. Comply with NEMA EN 10250, and list and label as complying with UL 50 and UL 50E, or UL 508A.
2. NEMA EN 10250 Environment Type, Unless Otherwise Indicated:
    a. Indoor Clean, Dry Locations: Type 1, painted steel.
    b. Outdoor Locations: Type 3R, painted steel.
3. Junction and Pull Boxes Larger Than 100 cubic inches:
    a. Provide screw-cover or hinged-cover enclosures unless otherwise indicated.
4. Finish for Painted Steel Enclosures: Manufacturer's standard grey unless otherwise indicated.
5. Manufacturers:
    a. Cooper B-Line, a division of Eaton Corporation: www.cooperindustries.com/#sle.
    b. Hoffman, a brand of Pentair Technical Products: www.hoffmanonline.com/#sle.
    c. Hubbell Incorporated; Wiegmann Products: www.hubbell-wiegmann.com/#sle.
    d. Substitutions: See Section 01 60 00 - Product Requirements.

PART 3 EXECUTION

3.01 EXAMINATION

A. Verify that field measurements are as indicated.

B. Verify that mounting surfaces are ready to receive boxes.

C. Verify that conditions are satisfactory for installation prior to starting work.

3.02 INSTALLATION

A. Install products in accordance with manufacturer's instructions.

B. Install boxes in accordance with NECA 1 (general workmanship) and, where applicable, NECA 130, including mounting heights specified in those standards where mounting heights are not indicated.

C. Arrange equipment to provide minimum clearances in accordance with manufacturer's instructions and NFPA 70.

D. Unless otherwise indicated, provide separate boxes for line voltage and low voltage systems.

E. Flush-mount boxes in finished areas unless specifically indicated to be surface-mounted.

F. Unless otherwise indicated, boxes may be surface-mounted where exposed conduits are indicated or permitted.

G. Box Locations:
   1. Locate boxes to be accessible.
   2. Unless dimensioned, box locations indicated are approximate.
   3. Locate and orient boxes as required for devices installed under other sections or by others.
      a. Switches, Receptacles, and Other Wiring Devices: Comply with Section 26 27 26.
      b. Communications Systems Outlets: Comply with Section 27 10 00.
   4. Locate boxes so that wall plates do not span different building finishes.
   5. Locate boxes so that wall plates do not cross masonry joints.
   6. Unless otherwise indicated, where multiple outlet boxes are installed at the same location at different mounting heights, install along a common vertical center line.
   7. Do not install flush-mounted boxes on opposite sides of walls back-to-back. Provide minimum 6 inches horizontal separation unless otherwise indicated:
      a. Acoustic-Rated Walls: Do not install flush-mounted boxes on opposite sides of walls back-to-back; provide minimum 24 inches horizontal separation.
      b. Fire Resistance Rated Walls: Install flush-mounted boxes such that the required fire resistance will not be reduced.
         1) Do not install flush-mounted boxes on opposite sides of walls back-to-back; provide minimum 24 inches separation where wall is constructed with individual noncommunicating stud cavities or protect both boxes with listed putty pads.
         2) Do not install flush-mounted boxes with area larger than 16 square inches or such that the total aggregate area of openings exceeds 100 square inches for any 100 square feet of wall area.
   8. Locate junction and pull boxes as indicated, as required to facilitate installation of conductors, and to limit conduit length and/or number of bends between pulling points in accordance with Section 26 05 33.13.
   9. Locate junction and pull boxes in the following areas, unless otherwise indicated:
      a. Concealed above accessible suspended ceilings.
      b. Within joists in areas with no ceiling.
      c. Electrical rooms.
      d. Mechanical equipment rooms.

H. Box Supports:
   1. Secure and support boxes in accordance with NFPA 70 and Section 26 05 29 using suitable supports and methods approved by the authority having jurisdiction.
   2. Provide independent support from building structure except for cast metal boxes (other than boxes used for fixture support) supported by threaded conduit connections in accordance with NFPA 70. Do not provide support from piping, ductwork, or other systems.
   3. Installation Above Suspended Ceilings: Do not provide support from ceiling grid or ceiling support system.
   4. Use far-side support to secure flush-mounted boxes supported from single stud in hollow stud walls. Repair or replace supports for boxes that permit excessive movement.

I. Install boxes plumb and level.

J. Flush-Mounted Boxes:
   1. Install boxes in noncombustible materials such as concrete, tile, gypsum, plaster, etc. so that front edge of box or associated raised cover is not set back from finished surface more than 1/4 inch or does not project beyond finished surface.
   2. Install boxes in combustible materials such as wood so that front edge of box or associated raised cover is flush with finished surface.
   3. Repair rough openings around boxes in noncombustible materials such as concrete, tile, gypsum, plaster, etc. so that there are no gaps or open spaces greater than 1/8 inch at the edge of the box.

K. Install boxes as required to preserve insulation integrity.

L. Install permanent barrier between ganged wiring devices when voltage between adjacent devices exceeds 300 V.

M. Install firestopping to preserve fire resistance rating of partitions and other elements, using materials and methods specified in Section 07 84 00.

N. Close unused box openings.

O. Install blank wall plates on junction boxes and on outlet boxes with no devices or equipment installed or designated for future use.

P. Provide grounding and bonding of boxes, enclosures and cabinets in accordance with Section 26 05 26.

Q. Identify boxes in accordance with Section 26 05 53.

R. Install in locations as shown on Drawings, and as required for splices, taps, wire pulling, equipment connections, and as required by NFPA 70.

S. Set wall mounted boxes at elevations to accommodate mounting heights indicated.

T. Electrical boxes are shown on Drawings in approximate locations unless dimensioned.
   1. Adjust box locations up to 10 feet if required to accommodate intended purpose.

U. Maintain headroom and present neat mechanical appearance.

V. Inaccessible Ceiling Areas: Install outlet and junction boxes no more than 6 inches from ceiling access panel or from removable recessed luminaire.

W. Coordinate mounting heights and locations of outlets mounted above counters, benches, and backsplashes.

X. Locate outlet boxes to allow luminaires to be positioned as shown on reflected ceiling plan.

Y. Align adjacent wall mounted outlet boxes for switches, thermostats, and similar devices.

Z. Locate flush mounting boxes in masonry walls to require cutting of masonry unit corner only. Coordinate masonry cutting to achieve neat opening.

AA. Secure flush mounting box to interior wall and partition studs. Accurately position to allow for surface finish thickness.

BB. Use gang boxes with plaster rings for single device outlets unless otherwise indicated.

3.03 ADJUSTING

A. Adjust flush-mounting outlets to make front flush with finished wall material.

B. Install knockout closures in unused box openings.

3.04 CLEANING

A. Clean interior of boxes to remove dirt, debris, plaster and other foreign material.

B. Clean exposed surfaces and restore finish.

3.05 PROTECTION

A. Immediately after installation, protect boxes from entry of moisture and foreign material until ready for installation of conductors.

END OF SECTION

SECTION 26 05 53
IDENTIFICATION FOR ELECTRICAL SYSTEMS

PART 1 GENERAL

1.01 SECTION INCLUDES

A. Electrical identification requirements.

B. Identification nameplates and labels.

C. Wire and cable markers.

D. Warning signs and labels.

1.02 RELATED REQUIREMENTS

A. Section 26 05 19 - Low-Voltage Electrical Power Conductors and Cables: Color coding for power conductors and cables 600 V and less; vinyl color coding electrical tape.

B. Section 27 10 00 - Structured Cabling for Voice and Data (DTI): Identification for communications cabling and devices.

1.03 REFERENCE STANDARDS

A. ANSI Z535.2 - American National Standard for Environmental and Facility Safety Signs; 2011.

B. ANSI Z535.4 - American National Standard for Product Safety Signs and Labels; 2011.

C. NFPA 70 - National Electrical Code; Most Recent Edition Adopted by Authority Having Jurisdiction, Including All Applicable Amendments and Supplements.

D. UL 969 - Marking and Labeling Systems; Current Edition, Including All Revisions.

1.04 ADMINISTRATIVE REQUIREMENTS

A. Coordination:
   1. Verify final designations for equipment, systems, and components to be identified prior to fabrication of identification products.

B. Sequencing:
   1. Do not conceal items to be identified, in locations such as above suspended ceilings, until identification products have been installed.
   2. Do not install identification products until final surface finishes and painting are complete.

1.05 SUBMITTALS

A. See Section 01 30 00 - Administrative Requirements for submittals procedures.

B. Product Data: Provide manufacturer's standard catalog pages and data sheets for each product.

C. Shop Drawings: Provide schedule of items to be identified indicating proposed designations, materials, legends, and formats.

1.06 QUALITY ASSURANCE

A. Comply with requirements of NFPA 70.

1.07 FIELD CONDITIONS

A. Do not install adhesive products when ambient temperature is lower than recommended by manufacturer.

PART 2 PRODUCTS

2.01 IDENTIFICATION REQUIREMENTS

A. Identification for Equipment:
   1. Use identification nameplate or identification label to identify each piece of electrical distribution and control equipment and associated sections, compartments, and components.

a. Panelboards:
1) Use typewritten circuit directory to identify load(s) served for panelboards with a door. Identify spares and spaces using pencil.
2) For power panelboards without a door, use identification nameplate or identification label to identify load(s) served for each branch device. Identify spares and spaces.

2. Use identification label to identify overcurrent protective devices for branch circuits serving fire alarm circuits. Identify with text "FIRE ALARM CIRCUIT".

B. Identification for Conductors and Cables:
1. Color Coding for Power Conductors 600 V and Less: Comply with Section 26 05 19.
2. Identification for Communications Conductors and Cables: Comply with Section 27 10 00.
3. Use wire and cable markers to identify circuit number or other designation indicated for power, control, and instrumentation conductors and cables at the following locations:
a. At each source and load connection.
b. Within boxes when more than one circuit is present.
c. Within equipment enclosures when conductors and cables enter or leave the enclosure.

C. Identification for Raceways:
1. Use color-coded bands or factory-painted conduits to identify systems other than normal power system for accessible conduits.
a. Maximum Intervals: 20 feet.
b. Color-Coded Bands: Use field-painting or vinyl color coding electrical tape to mark bands 3 inches wide.
1) Vinyl Color Coding Electrical Tape: Comply with Section 26 05 19.
c. Color Code:
1) Emergency Power System: Red.
2) Fire Alarm System: Red.
2. Use identification labels or plastic marker tags to identify circuits enclosed for accessible conduits at wall penetrations, at floor penetrations, and at equipment terminations when source is not within sight.
3. Use identification labels or plastic marker tags to identify spare conduits at each end. Identify purpose and termination location.

D. Identification for Boxes:
1. Use identification labels to identify highest voltage present.
2. Use color coded boxes to identify systems other than normal power system.
a. Color-Coded Boxes: Field-painted with the same color code used for raceways.
1) Emergency Power System: Red.
2) Fire Alarm System: Red.
3. Use identification labels to identify circuits enclosed.
a. Identify circuits via power source and circuit numbers.
1) Include voltage and phase for other than 120 V, single phase circuits.

E. Identification for Devices:
1. Identification for Communications Devices: Comply with Section 27 10 00.
2. Wiring Device and Wallplate Finishes: Comply with Section 26 27 26.
3. Use identification label to identify fire alarm system devices.
a. For devices concealed above suspended ceilings, provide additional identification on ceiling tile below device location.
4. Use identification label to identify serving branch circuit for all receptacles.

F. Identification for Luminaires:
1. Use permanent red dot on luminaire frame to identify luminaires connected to emergency power system or with integral emergency power supply units.

2.02 IDENTIFICATION NAMEPLATES AND LABELS

A. Identification Nameplates:
   1. Manufacturers:
      a. Brimar Industries, Inc: www.brimar.com/#sle.
      b. Kolbi Pipe Marker Co: www.kolbipipemarkers.com/#sle.
      c. Seton Identification Products: www.seton.com/#sle.
      d. Substitutions: See Section 01 60 00 - Product Requirements.
   2. Materials:
      a. Indoor Clean, Dry Locations: Use plastic nameplates.
   3. Plastic Nameplates: Two-layer or three-layer laminated acrylic or electrically non-conductive phenolic with beveled edges; minimum thickness of 1/16 inch; engraved text.
      a. Exception: Provide minimum thickness of 1/8 inch when any dimension is greater than 4 inches.
   4. Mounting Holes for Mechanical Fasteners: Two, centered on sides for sizes up to 1 inch high; Four, located at corners for larger sizes.

B. Identification Labels:
   1. Manufacturers:
      a. Brady Corporation: www.bradyid.com/#sle.
      b. Brother International Corporation: www.brother-usa.com/#sle.
      c. Panduit Corp: www.panduit.com/#sle.
      d. Substitutions: See Section 01 60 00 - Product Requirements.
   2. Materials: Use self-adhesive laminated plastic labels; UV, chemical, water, heat, and abrasion resistant.
      a. Use only for indoor locations.
   3. Text: Use factory pre-printed or machine-printed text. Do not use handwritten text unless otherwise indicated.

C. Format for Equipment Identification:
   1. Minimum Size: 1.5 inches by 4 inches.
   2. Legend:
      a. System designation where applicable:
         1) Emergency Power System: Identify with text "EMERGENCY".
         2) Fire Alarm System: Identify with text "FIRE ALARM".
      b. Equipment designation or other approved description.
      c. Voltage and phase (single-phase or 3-phase).
      d. Power source and circuit number.
      e. Other information as indicated.
   3. Text: All capitalized unless otherwise indicated.
   4. Minimum Text Height:
      a. System Designation: 1 inch.
      b. Equipment Designation: 1/4 inch.
      c. Other Information: 1/4 inch.
      d. Exception: Provide minimum text height of 1 inch for equipment located more than 10 feet above floor or working platform.
   5. Color:
      a. Normal Power System: Black text on white background.
      b. Emergency Power System: White text on red background.
      c. Fire Alarm System: White text on red background.

D. Format for General Information and Operating Instructions:
   1. Minimum Size: 2 inches by 4 inches.
   2. Legend: Include information or instructions indicated or as required for proper and safe operation and maintenance.

3. Text: All capitalized unless otherwise indicated.
4. Minimum Text Height: 1/4 inch.
5. Color: White text on blue background unless otherwise indicated.
   a. Exceptions:
      1) Provide white text on red background for general information or operational instructions for emergency systems.
      2) Provide white text on red background for general information or operational instructions for fire alarm systems.

E. Format for Caution and Warning Messages:
1. Minimum Size: 2 inches by 4 inches.
2. Legend: Include information or instructions indicated or as required for proper and safe operation and maintenance.
3. Text: All capitalized unless otherwise indicated.
4. Minimum Text Height: 1/2 inch.
5. Color: Black text on yellow background unless otherwise indicated.

F. Format for Receptacle Identification:
1. Minimum Size: 3/8 inch by 1.5 inches.
2. Legend: Power source and circuit number or other designation indicated.
3. Text: All capitalized unless otherwise indicated.
4. Minimum Text Height: 3/16 inch.
5. Color: Black text on clear background.

G. Format for Control Device Identification (toggle switches, motor starters, etc.):
1. Minimum Size: 3/8 inch by 1.5 inches.
2. Legend: Load controlled, power source and circuit number or other designation indicated.
3. Text: All capitalized unless otherwise indicated.
4. Minimum Text Height: 3/16 inch.
5. Color: Black text on clear background.

H. Format for Fire Alarm Device Identification:
1. Minimum Size: 3/8 inch by 1.5 inches.
2. Legend: Designation indicated and device zone or address.
3. Text: All capitalized unless otherwise indicated.
4. Minimum Text Height: 3/16 inch.
5. Color: White text on red background.

2.03 WIRE AND CABLE MARKERS

A. Manufacturers:
1. Brady Corporation: www.bradyid.com/#sle.
2. HellermannTyton: www.hellermanntyton.com/#sle.
3. Panduit Corp: www.panduit.com/#sle.
4. Substitutions: See Section 01 60 00 - Product Requirements.

B. Markers for Conductors and Cables: Use heat-shrink sleeve type markers suitable for the conductor or cable to be identified.
1. Do not use self-adhesive type markers.

C. Markers for Conductor and Cable Bundles: Use plastic marker tags secured by nylon cable ties.

D. Legend: Power source and circuit number or other designation indicated.

E. Text: Use factory pre-printed or machine-printed text, all capitalized unless otherwise indicated.
1. Do not use handwritten text.

F. Minimum Text Height: 1/8 inch.

G. Color: Black text on white background unless otherwise indicated.

2.04 WARNING SIGNS AND LABELS

A. Manufacturers:
1. Brimar Industries, Inc: www.brimar.com/#sle.
2. Clarion Safety Systems, LLC: www.clarionsafety.com/#sle.
3. Insite Solutions, LLC: www.stop-painting.com/#sle.
4. Seton Identification Products: www.seton.com/#sle.
5. Substitutions: See Section 01 60 00 - Product Requirements.

B. Comply with ANSI Z535.2 or ANSI Z535.4 as applicable.

C. Warning Signs:
1. Materials:
a. Indoor Dry, Clean Locations: Use factory pre-printed rigid plastic or self-adhesive vinyl signs.
b. Outdoor Locations: Use factory pre-printed rigid aluminum signs.
2. Rigid Signs: Provide four mounting holes at corners for mechanical fasteners.
3. Minimum Size: 7 by 10 inches unless otherwise indicated.

D. Warning Labels:
1. Materials: Use factory pre-printed or machine-printed self-adhesive polyester or self-adhesive vinyl labels; UV, chemical, water, heat, and abrasion resistant; produced using materials recognized to UL 969.
a. Do not use labels designed to be completed using handwritten text.
2. Machine-Printed Labels: Use thermal transfer process printing machines and accessories recommended by label manufacturer.
3. Minimum Size: 2 by 4 inches unless otherwise indicated.

PART 3 EXECUTION

3.01 PREPARATION

A. Clean surfaces to receive adhesive products according to manufacturer's instructions.

3.02 INSTALLATION

A. Install products in accordance with manufacturer's instructions.

B. Install identification products to be plainly visible for examination, adjustment, servicing, and maintenance. Unless otherwise indicated, locate products as follows:
1. Surface-Mounted Equipment: Enclosure front.
2. Flush-Mounted Equipment: Enclosure front.
3. Free-Standing Equipment: Enclosure front; also enclosure rear for equipment with rear access.
4. Elevated Equipment: Legible from the floor or working platform.
5. Interior Components: Legible from the point of access.
6. Conduits: Legible from the floor.
7. Boxes: Outside face of cover.
8. Conductors and Cables: Legible from the point of access.
9. Devices: Outside face of cover.

C. Install identification products centered, level, and parallel with lines of item being identified.

D. Secure nameplates to exterior surfaces of enclosures using stainless steel screws or epoxy cement and to interior surfaces using self-adhesive backing or epoxy cement.

E. Install self-adhesive labels and markers to achieve maximum adhesion, with no bubbles or wrinkles and edges properly sealed.

F. Secure rigid signs using stainless steel screws.

3.03 FIELD QUALITY CONTROL

A. See Section 01 40 00 - Quality Requirements, for additional requirements.

B. Replace self-adhesive labels and markers that exhibit bubbles, wrinkles, curling or other signs of improper adhesion.

END OF SECTION

SECTION 26 05 83
WIRING CONNECTIONS

PART 1 GENERAL

1.01 SECTION INCLUDES

A. Electrical connections to equipment.

1.02 RELATED REQUIREMENTS

A. Section 26 05 19 - Low-Voltage Electrical Power Conductors and Cables.

B. Section 26 05 33.13 - Conduit for Electrical Systems.

C. Section 26 05 33.16 - Boxes for Electrical Systems.

D. Section 26 27 26 - Wiring Devices.

1.03 REFERENCE STANDARDS

A. NFPA 70 - National Electrical Code; Most Recent Edition Adopted by Authority Having Jurisdiction, Including All Applicable Amendments and Supplements.

1.04 ADMINISTRATIVE REQUIREMENTS

A. Coordination:
   1. Obtain and review shop drawings, product data, manufacturer's wiring diagrams, and manufacturer's instructions for equipment furnished under other sections.
   2. Determine connection locations and requirements.

B. Sequencing:
   1. Install rough-in of electrical connections before installation of equipment is required.
   2. Make electrical connections before required start-up of equipment.

1.05 SUBMITTALS

A. See Section 01 30 00 - Administrative Requirements, for submittal procedures.

1.06 QUALITY ASSURANCE

A. Comply with requirements of NFPA 70.

B. Products: Listed, classified, and labeled as suitable for the purpose intended.

C. Product Listing Organization Qualifications: An organization recognized by OSHA as a Nationally Recognized Testing Laboratory (NRTL) and acceptable to authorities having jurisdiction.

PART 2 PRODUCTS

2.01 MATERIALS

A. Wiring Devices: As specified in Section 26 27 26.

B. Flexible Conduit: As specified in Section 26 05 33.13.

C. Wire and Cable: As specified in Section 26 05 19.

D. Boxes: As specified in Section 26 05 33.16.

PART 3 EXECUTION

3.01 EXAMINATION

A. Verify that equipment is ready for electrical connection, wiring, and energization.

3.02 ELECTRICAL CONNECTIONS

A. Make electrical connections in accordance with equipment manufacturer's instructions.

B. Make conduit connections to equipment using flexible conduit. Use liquidtight flexible conduit with watertight connectors in damp or wet locations.

C. Connect heat producing equipment using wire and cable with insulation suitable for temperatures encountered.

D. Provide receptacle outlet to accommodate connection with attachment plug.

E. Install disconnect switches, controllers, control stations, and control devices to complete equipment wiring requirements.

F. Install terminal block jumpers to complete equipment wiring requirements.

G. Install interconnecting conduit and wiring between devices and equipment to complete equipment wiring requirements.

END OF SECTION

SECTION 26 09 23
LIGHTING CONTROL DEVICES

PART 1 GENERAL

1.01 SECTION INCLUDES

A. Occupancy sensors.

B. Digital load controllers.

1.02 RELATED REQUIREMENTS

A. Section 26 05 19 - Low-Voltage Electrical Power Conductors and Cables.

B. Section 26 05 29 - Hangers and Supports for Electrical Systems

C. Section 26 05 33.16 - Boxes for Electrical Systems.

D. Section 26 05 53 - Identification for Electrical Systems: Identification products and requirements.

E. Section 26 27 26 - Wiring Devices: Devices for manual control of lighting, including wall switches and wall dimmers.
   1. Includes finish requirements for wall controls specified in this section.

F. Section 26 51 00 - Interior Lighting.

1.03 REFERENCE STANDARDS

A. 47 CFR 15 - Radio Frequency Devices; current edition.

B. NECA 1 - Standard for Good Workmanship in Electrical Construction; 2010.

C. NECA 130 - Standard for Installing and Maintaining Wiring Devices; 2010.

D. NEMA 410 - Performance Testing for Lighting Controls and Switching Devices with Electronic Drivers and Discharge Ballasts; 2011.

E. NFPA 70 - National Electrical Code; Most Recent Edition Adopted by Authority Having Jurisdiction, Including All Applicable Amendments and Supplements.

F. UL 2043 - Fire Test for Heat and Visible Smoke Release for Discrete Products and Their Accessories Installed in Air-Handling Spaces; Current Edition, Including All Revisions.

1.04 ADMINISTRATIVE REQUIREMENTS

A. Coordination:
   1. Coordinate placement of lighting control devices with millwork, furniture, equipment and other potential conflicts.
   2. Coordinate placement of wall switch occupancy sensors with installed door swings.
   3. Coordinate placement of occupancy sensors with millwork, furniture, equipment and other potential obstructions to motion detection coverage.
   4. Coordinate lighting control device product selections with luminaire characteristics; see Section 26 51 00 and lighting fixture schedule.
   5. Notify DEDC, LLC of conflicts or deviations from Contract Documents to obtain direction prior to proceeding with work.

B. Sequencing:
   1. Do not install lighting control devices until final surface finishes and painting are complete.

1.05 SUBMITTALS

A. See Section 01 30 00 - Administrative Requirements, for submittal procedures.

B. Product Data: Include ratings, operating modes or sequence of functions, configurations, standard wiring diagrams, dimensions, colors, service condition requirements, and installed features.
   1. Occupancy Sensors: Include detailed motion detection coverage range diagrams.

C. Shop Drawings:
   1. Occupancy Sensors: Provide lighting plan indicating location, model number, and orientation of each occupancy sensor and associated system component.
   2. Digital Load Controllers: Provide dimensioned plan views indicating locations of system components, required clearances, and field connection locations. Include system interconnection schematic diagrams showing factory and field connections. Include manufacturer product characteristics and application instructions for wired and wireless applications, including start-up and commissioning.

D. Field quality control reports.

E. Operation and Maintenance Data: Include detailed information on device programming and setup.

F. Maintenance Materials: Furnish the following for State of Delaware OMB - Division of Facilities Management's use in maintenance of project.
   1. See Section 01 60 00 - Product Requirements, for additional provisions.

G. Project Record Documents: Record actual installed locations and settings for lighting control devices.

1.06 QUALITY ASSURANCE

A. Comply with NFPA 70.

B. Maintain at project site one copy of each referenced document that prescribes execution requirements.

C. Manufacturer Qualifications: Company specializing in manufacturing products specified in this section with minimum three years documented experience.

D. Product Evaluation and Listing Organization Qualifications: Organization engaged in evaluation of products and services, including those recognized by OSHA as Nationally Recognized Testing Laboratories (NRTL), and acceptable to authorities having jurisdiction.

1.07 DELIVERY, STORAGE, AND PROTECTION

A. Store products in clean, dry space in original manufacturer's packaging in accordance with manufacturer's written instructions until ready for installation.

1.08 FIELD CONDITIONS

A. Maintain field conditions within manufacturer's required service conditions during and after installation.

1.09 WARRANTY

A. See Section 01 78 00 - Closeout Submittals, for additional warranty requirements.

B. Manufacturer Warranty: Provide manufacturer warranty for defects in material and workmanship for duration below. Complete forms in State of Delaware OMB - Division of Facilities Management's name and register with manufacturer.
   1. Occupancy Sensors: 5 years.
   2. Digital Load Controllers: 5 years.

PART 2 PRODUCTS

2.01 LIGHTING CONTROL DEVICES - GENERAL REQUIREMENTS

A. Provide products listed, classified, and labeled as suitable for purpose intended.

B. Unless specifically indicated as excluded, provide components necessary for complete operating system including, but not limited to, conduit, wiring, connectors, hardware, and accessories.

C. Products for Switching of Electronic Ballasts/Drivers: Tested and rated to be suitable for peak inrush currents specified in NEMA 410.

2.02 OCCUPANCY SENSORS

A. Manufacturers:
   1. Acuity Brands, Inc: www.acuitybrands.com/#sle.
   2. Cooper Lighting Solutions: www.cooperlighting.com/#sle.
   3. Current Brands (HLI Solutions, Inc): www.currentlighting.com/#sle.
   4. Legrand North America, Inc: www.legrand.us/#sle.
   5. Leviton: www.leviton.com/#sle.
   6. Substitutions: See Section 01 60 00 - Product Requirements.
   7. Source Limitations: Furnish products produced by single manufacturer and obtained from single supplier.

B. General Requirements:
   1. Description: Factory-assembled commercial specification grade devices for indoor use capable of sensing both major motion, such as walking, and minor motion, such as small desktop level movements, according to published coverage areas, for automatic control of load indicated.
   2. Sensor Technology:
      a. Passive Infrared/Ultrasonic Dual Technology Occupancy Sensors: Designed to detect occupancy using combination of both passive infrared and ultrasonic technologies.
      b. Passive Infrared/Acoustic Dual Technology Occupancy Sensors: Designed to detect occupancy using combination of both passive infrared and audible sound sensing technologies.
   3. Provide LED to visually indicate motion detection with separate color LEDs for each sensor type in dual technology units.
   4. Operation: Unless otherwise indicated, occupancy sensor to turn load on when occupant presence is detected and to turn load off when no occupant presence is detected during adjustable turn-off delay time interval.
   5. Dual Technology Occupancy Sensors: Field configurable turn-on and hold-on activation with settings for activation by either or both sensing technologies.
   6. Passive Infrared Lens Field of View: Field customizable by addition of factory masking material, adjustment of integral blinders, or similar means to block motion detection in selected areas.
   7. Turn-Off Delay: Field adjustable, with time delay settings up to 30 minutes.
   8. Sensitivity: Field adjustable.
   9. Adaptive Technology: Field selectable; capable of self-adjusting sensitivity and time delay according to conditions.
   10. Integral Photocell: For field selectable and adjustable inhibition of automatic turn-on of load when ambient lighting is above selected level.
   11. Compatibility (Non-Dimming Sensors): Suitable for controlling incandescent lighting, low-voltage lighting with electronic and magnetic transformers, fluorescent lighting with electronic and magnetic ballasts, and fractional motor loads, with no minimum load requirements.
   12. Load Rating for Line Voltage Occupancy Sensors: As required to control load indicated on drawings.
   13. Where wired sensors are indicated, wireless sensors are not acceptable.

C. Wall Switch Occupancy Sensors:
   1. General Requirements:
      a. Description: Occupancy sensors designed for installation in standard wall box at standard wall switch mounting height with field of view of 180 degrees, integrated manual control capability, and no leakage current to load in off mode.
      b. Operation: Field selectable to operate either as occupancy sensor (automatic on/off) or as vacancy sensor (manual-on/automatic off).

c. Provide selectable audible alert to notify occupant of impending load turn-off.
d. Finish: Color to be selectedby Architect.
e. Provide vandal resistant lenses for dual technology wall switch occupancy sensors.

2. Passive Infrared/Ultrasonic Dual Technology Wall Switch Occupancy Sensors: Capable of detecting motion within area of 900 square feet.

D. Wall Dimmer Occupancy Sensors:
1. General Requirements:
a. Description: Occupancy sensors designed for installation in standard wall box at standard wall switch mounting height with field of view of 180 degrees, integrated dimming control capability, and no leakage current to load in off mode.
b. Operation: Field selectable to operate either as occupancy sensor (automatic on/off) or as vacancy sensor (manual-on/automatic off).
c. Provide selectable audible alert to notify occupant of impending load turn-off.
d. Dimmer: 0-10V DC operation.
e. Provide field adjustable dimming preset for occupied state.
f. Finish: Color to be selectedby Architect.
g. Provide vandal resistant lenses for dual technology wall dimmer occupancy sensors.

2. Passive Infrared (PIR)/Ultrasonic or Acoustic Dual Technology Wall Dimmer Occupancy Sensors: Capable of detecting motion within area of 900 square feet.

E. Ceiling Mounted Occupancy Sensors:
1. General Requirements:
a. Description: Low profile occupancy sensors designed for ceiling installation.
b. Unless otherwise indicated or required to control the load indicated on the drawings, provide low voltage units, for use with separate digital load controllers.
c. Finish: White unless otherwise indicated.

2. Passive Infrared/Ultrasonic Dual Technology Ceiling Mounted Occupancy Sensors:
a. Extended Range Sensors: Capable of detecting motion within area of 1,200 square feet at mounting height of 9 feet, with field of view of 360 degrees.

3. Passive Infrared/Acoustic Dual Technology Ceiling Mounted Occupancy Sensors:
a. Extended Range Sensors: Capable of detecting motion within area of 1,200 square feet at mounting height of 9 feet.

2.03 DIGITAL LOAD CONTROLLERS

A. Manufacturers:
1. Acuity Brands, Inc: www.acuitybrands.com/#sle.
2. Cooper Lighting Solutions: www.cooperlighting.com/#sle.
3. Current Brands (HLI Solutions, Inc): www.currentlighting.com/#sle.
4. Legrand North America, Inc: www.legrand.us/#sle.
5. Leviton: www.leviton.com/#sle.
6. Substitutions: See Section 01 60 00 - Product Requirements.
7. Source Limitations: Furnish products produced by single manufacturer and obtained from single supplier.

B. System Description:
1. Basis of Design: Wattstopper Digital Lighting Management (DLM) system as manufactured by Legrand, Inc.
2. Stand-alone system, including interconnected modules and accessories, for lighting load low-voltage control as indicated on drawings.
3. Product standard system configurations preconfigured out of box, plug-and-play, automatically self-addressing devices for communications, and without need to field configure or program features, or requiring device setting adjustments. LEDs on unit indicate operation and troubleshooting without software intervention.

4. Provide quantity and configuration of power and slave packs, communication modules, and load expansion modules, including associated wiring, wired and wireless components, and accessories to control loads indicated.
5. Also referred to as room, area, or architectural digital load controllers, as indicated, depending on space and functionality. Each controller includes one or more channels for load control, also referred to as zones.

C. General Requirements:
1. Listed for powering and controlling line-voltage loads, power packs, contactors, relays, and other lighting control devices.
2. Input Supply Voltage: Dual rated for 120/277 VAC.
3. Cabling Terminations:
   a. Provide field installed and tested control wiring.
   b. Include line and load wiring leads.
4. Compatibility:
   a. Compatible with wired sensors and communication protocols for controlling line-voltage loads.
      1) Electromagnetic Interference/Radio Frequency Interference (EMI/RFI) Limits: Comply with FCC requirements of 47 CFR 15, for Class B application.
   b. Configurable for single room control as indicated from single digital load controller.
5. Provide UL 2043 plenum rated control unit with self-contained relay(s) and low-voltage class 2 transformer, compatible with specified wired and wireless sensors, components, and ballasts/drivers.
   a. Comply with NFPA 70 for use in plenum spaces.
   b. Provide UL 2043 plenum rating for associated system control components for control indicated.
6. Surface Mounting: Standard junction box attachments.
7. Minimum Load Rating: As required to control load indicated on drawings.
8. Control Inputs:
   a. Digital: Four.
   b. Analog: Four.
   c. Include 24 VDC device power input and coordinate maximum current draw as required.
   d. Include automatic-on and manual-on occupancy control wiring inputs.
   e. Include wiring inputs for manual overrides as indicated.
9. Output Control Capability:
   a. Single Zone Switching Modules: One programmable channel.
   b. Multi-Zone Switching Modules: Up to three separately programmable channels.

D. Additional Integrated Requirements forDigital Load Controllers:
1. Accessories:
   a. Where indicated, provide compatible accessory low voltage wall switches for manual override control.
   b. Where indicated, provide compatible Input Interface Module with circuiting as required to interface Digital Load Controllers with the building fire alarm system such that a fire alarm condition shall automatically switch controlled luminaires in paths of egress to "on" in accordance with NFPA 101 requirements. Such luminaires shall be brought up to full brightness, bypassing any dimming controls.

PART 3 EXECUTION

3.01 EXAMINATION

A. Verify that field measurements are as indicated.

B. Verify that outlet boxes are installed in proper locations and at proper mounting heights and are properly sized to accommodate devices and conductors in accordance with NFPA 70.

C. Verify that openings for outlet boxes are neatly cut and will be completely covered by devices or wall plates.

D. Verify that final surface finishes are complete, including painting.

E. Verify that branch circuit wiring installation is completed, tested, and ready for connection to lighting control devices.

F. Verify that service voltage and ratings of lighting control devices are appropriate for service voltage and load requirements at location to be installed.

G. Verify that conditions are satisfactory for installation prior to starting work.

3.02 PREPARATION

A. Provide extension rings to bring outlet boxes flush with finished surface.

B. Clean dirt, debris, plaster, and other foreign materials from outlet boxes.

3.03 INSTALLATION

A. Install lighting control devices in accordance with NECA 1 (general workmanship) and, where applicable, NECA 130.

B. Coordinate locations of outlet boxes as required for installation of lighting control devices; see Section 26 05 33.16.
   1. Mounting Heights: As indicated on the drawings.
   2. Orient outlet boxes for vertical installation of lighting control devices unless otherwise indicated.
   3. Locate wall switch occupancy sensors on strike side of door with edge of wall plate 3 inches from edge of door frame. Where locations are indicated otherwise, notify DEDC, LLC to obtain direction prior to proceeding with work.

C. Maintain separation of remote-control, signaling, and power-limited circuits.
   1. See manufacturer instructions and Section 26 05 19 for control wiring conductors, wiring methods, and identification requirements.

D. Install lighting control devices in accordance with manufacturer's instructions.

E. Unless otherwise indicated, connect lighting control device grounding terminal or conductor to branch circuit equipment grounding conductor and to outlet box with bonding jumper.

F. Install lighting control devices plumb and level, and held securely in place.

G. Where required and not furnished with lighting control device, provide wall plate; see Section 26 27 26.

H. Provide required supports; see Section 26 05 29.

I. Where applicable, install lighting control devices and associated wall plates to fit completely flush to mounting surface with no gaps and rough opening completely covered without strain on wall plate. Repair or reinstall improperly installed outlet boxes or improperly sized rough openings. Do not use oversized wall plates in lieu of meeting this requirement.

J. Identify lighting control devices; see Section 26 05 53.

K. Occupancy Sensor Locations:
   1. Location Adjustments: Locations indicated are diagrammatic and only intended to indicate which rooms or areas require devices. Provide quantity and locations as required for complete coverage of respective room or area based on manufacturer's recommendations for installed devices.
   2. Locate dual technology passive infrared/ultrasonic occupancy sensors a minimum of 4 feet from air supply ducts or other sources of heavy air flow and as per manufacturer's recommendations, in order to minimize false triggers.

L. Lamp Burn-In: Operate lamps at full output for minimum of 100 hours or prescribed period per manufacturer's recommendations prior to use with dimming controls. Replace lamps that fail prematurely due to improper lamp burn-in.

M. Unless otherwise indicated, install power packs for lighting control devices above accessible ceiling or above access panel in inaccessible ceiling near sensor location.

N. Where indicated, install separate compatible wall switches for manual control interface with lighting control devices or associated power packs.

3.04 FIELD QUALITY CONTROL

A. See Section 01 40 00 - Quality Requirements, for additional requirements.

B. Inspect each lighting control device for damage and defects.

C. Test occupancy sensors to verify proper operation, including time delays and ambient light thresholds where applicable. Verify optimal coverage for entire room or area. Record test results in written report to be included with submittals.

D. Correct wiring deficiencies and replace damaged or defective conductors, cables, and lighting control devices.

3.05 ADJUSTING

A. Adjust devices and wall plates to be flush and level.

B. Adjust occupancy sensor settings to minimize undesired activations while optimizing energy savings, and to achieve desired function as indicated or as directed by DEDC, LLC.

C. Where indicated or as directed by Architect, install factory masking material or adjust integral blinders on dual technology occupancy sensor lenses to block undesired motion detection.

3.06 CLEANING

A. Clean exposed surfaces to remove dirt, paint, or other foreign material and restore to match original factory finish.

3.07 CLOSEOUT ACTIVITIES

A. See Section 01 78 00 - Closeout Submittals, for closeout submittals.

B. See Section 01 79 00 - Demonstration and Training, for additional requirements.

C. Demonstration: Demonstrate proper operation of lighting control devices to DEDC, LLC, and correct deficiencies or make adjustments as directed.

D. Training: Train State of Delaware OMB - Division of Facilities Management's personnel on operation, adjustment, programming, and maintenance of lighting control devices.
   1. Use operation and maintenance manual as training reference, supplemented with additional training materials as required.
   2. Provide minimum of two hours of training.
   3. Instructor: Qualified contractor familiar with the project and with sufficient knowledge of installed lighting control devices.
   4. Location: At project site.

END OF SECTION

This page intentionally left blank

SECTION 26 27 26
WIRING DEVICES

PART 1 GENERAL

1.01 SECTION INCLUDES

A. Receptacles.

B. Wall plates and covers.

1.02 RELATED REQUIREMENTS

A. Section 26 05 33.16 - Boxes for Electrical Systems.

B. Section 26 05 53 - Identification for Electrical Systems: Identification products and requirements.

1.03 REFERENCE STANDARDS

A. NECA 1 - Standard for Good Workmanship in Electrical Construction; 2010.

B. NECA 130 - Standard for Installing and Maintaining Wiring Devices; 2010.

C. NEMA WD 1 - General Color Requirements for Wiring Devices; 1999 (R 2010).

D. NEMA WD 6 - Wiring Devices - Dimensional Specifications; 2012.

E. NFPA 70 - National Electrical Code; Most Recent Edition Adopted by Authority Having Jurisdiction, Including All Applicable Amendments and Supplements.

F. UL 498 - Attachment Plugs and Receptacles; Current Edition, Including All Revisions.

G. UL 514D - Cover Plates for Flush-Mounted Wiring Devices; Current Edition, Including All Revisions.

1.04 ADMINISTRATIVE REQUIREMENTS

A. Coordination:
   1. Coordinate the placement of outlet boxes with millwork, furniture, equipment, etc. installed under other sections or by others.
   2. Coordinate wiring device ratings and configurations with the electrical requirements of actual equipment to be installed.
   3. Coordinate the placement of outlet boxes for wall switches with actual installed door swings.
   4. Coordinate the installation and preparation of uneven surfaces, such as split face block, to provide suitable surface for installation of wiring devices.
   5. Notify DEDC, LLC of any conflicts or deviations from Contract Documents to obtain direction prior to proceeding with work.

B. Sequencing:
   1. Do not install wiring devices until final surface finishes and painting are complete.

1.05 SUBMITTALS

A. See Section 01 30 00 - Administrative Requirements, for submittal procedures.

B. Product Data: Provide manufacturer's catalog information showing dimensions, colors, and configurations.

C. Field Quality Control Test Reports.

D. Project Record Documents: Record actual installed locations of wiring devices.

E. Maintenance Materials: Furnish the following for State of Delaware OMB - Division of Facilities Management's use in maintenance of project.
   1. See Section 01 60 00 - Product Requirements, for additional provisions.
   2. Extra Wall Plates: Two of each style, size, and finish.

1.06 QUALITY ASSURANCE

A. Comply with requirements of NFPA 70.

B. Maintain at the project site a copy of each referenced document that prescribes execution requirements.

C. Manufacturer Qualifications: Company specializing in manufacturing the products specified in this section with minimum three years documented experience.

D. Products: Listed, classified, and labeled as suitable for the purpose intended.

E. Product Evaluation and Listing Organization Qualifications: Organization engaged in evaluation of products and services, including those recognized by OSHA as Nationally Recognized Testing Laboratories (NRTL), and acceptable to authorities having jurisdiction.

1.07 DELIVERY, STORAGE, AND PROTECTION

A. Store in a clean, dry space in original manufacturer's packaging until ready for installation.

PART 2 PRODUCTS

2.01 WIRING DEVICES - GENERAL REQUIREMENTS

A. Provide wiring devices suitable for intended use with ratings adequate for load served.

B. Wiring Device Applications:
   1. Single Receptacles Installed on Individual Branch Circuits: Provide receptacle ampere rating equal to branch circuit rating.

C. Wiring Device Finishes:
   1. All wiring devices to be provided with compatible nylon wall plates unless otherwise noted. Device and wall plate colors to be selected by Architect.

2.02 RECEPTACLES

A. Manufacturers:
   1. Eaton Corporation: www.eaton.com/#sle.
   2. Hubbell Incorporated: www.hubbell.com/#sle.
   3. Leviton Manufacturing Company, Inc: www.leviton.com/#sle.
   4. Pass & Seymour, a brand of Legrand North America, Inc: www.legrand.us/#sle.
   5. Substitutions: See Section 01 60 00 - Product Requirements.

B. Receptacles - General Requirements: Self-grounding, complying with NEMA WD 1 and NEMA WD 6, and listed as complying with UL 498; types as indicated on the drawings.
   1. Wiring Provisions: Terminal screws for side wiring or screw actuated binding clamp for back wiring with separate ground terminal screw.
   2. NEMA configurations specified are according to NEMA WD 6.

C. Convenience Receptacles:
   1. Standard Convenience Receptacles: Industrial specification grade, 20A, 125V, NEMA 5-20R; single or duplex as indicated on the drawings.

2.03 WALL PLATES AND COVERS

A. Manufacturers:
   1. Eaton Corporation: www.eaton.com/#sle.
   2. Hubbell Incorporated: www.hubbell-wiring.com/#sle.
   3. Leviton Manufacturing Company, Inc: www.leviton.com/#sle.
   4. Pass & Seymour, a brand of Legrand North America, Inc: www.legrand.us/#sle.
   5. Substitutions: See Section 01 60 00 - Product Requirements.

B. Wall Plates: Comply with UL 514D.
   1. Configuration: One piece cover as required for quantity and types of corresponding wiring devices.
   2. Size: Standard.

3. Screws: Metal with slotted heads finished to match wall plate finish.

C. Nylon Wall Plates: Smooth finish, high-impact thermoplastic.

PART 3 EXECUTION

3.01 EXAMINATION

A. Verify that field measurements are as indicated.

B. Verify that outlet boxes are installed in proper locations and at proper mounting heights and are properly sized to accommodate devices and conductors in accordance with NFPA 70.

C. Verify that wall openings are neatly cut and will be completely covered by wall plates.

D. Verify that final surface finishes are complete, including painting.

E. Verify that branch circuit wiring installation is completed, tested, and ready for connection to wiring devices.

F. Verify that conditions are satisfactory for installation prior to starting work.

3.02 PREPARATION

A. Provide extension rings to bring outlet boxes flush with finished surface.

B. Clean dirt, debris, plaster, and other foreign materials from outlet boxes.

3.03 INSTALLATION

A. Perform work in accordance with NECA 1 (general workmanship) and, where applicable, NECA 130, including mounting heights specified in those standards unless otherwise indicated.

B. Coordinate locations of outlet boxes provided under Section 26 05 33.16 as required for installation of wiring devices provided under this section.
   1. Mounting Heights: As indicated on the drawings.
   2. Orient outlet boxes for vertical installation of wiring devices unless otherwise indicated.
   3. Where multiple receptacles are installed at the same location and at the same mounting height, gang devices together under a common wall plate.

C. Install wiring devices in accordance with manufacturer's instructions.

D. Install permanent barrier between ganged wiring devices when voltage between adjacent devices exceeds 300 V.

E. Where required, connect wiring devices using pigtails not less than 6 inches long. Do not connect more than one conductor to wiring device terminals.

F. Connect wiring devices by wrapping conductor clockwise 3/4 turn around screw terminal and tightening to proper torque specified by the manufacturer. Where present, do not use push-in pressure terminals that do not rely on screw-actuated binding.

G. Unless otherwise indicated, connect wiring device grounding terminal to branch circuit equipment grounding conductor and to outlet box with bonding jumper.

H. Install wiring devices plumb, secure and level with mounting yoke held rigidly in place.

I. Install vertically mounted receptacles with grounding pole on bottom and horizontally mounted receptacles with grounding pole on right.

J. Install wall plates to fit completely flush to wall with no gaps and rough opening completely covered without strain on wall plate. Repair or reinstall improperly installed outlet boxes or improperly sized rough openings. Do not use oversized wall plates in lieu of meeting this requirement.

K. Install blank wall plates on junction boxes and on outlet boxes with no wiring devices installed or designated for future use.

L. Identify wiring devices in accordance with Section 26 05 53.

M. Install raised galvanized steel cover plates on outlet boxes and junction boxes in unfinished areas, above accessible ceilings, and on surface mounted switches & receptacles.

3.04 FIELD QUALITY CONTROL

A. See Section 01 40 00 - Quality Requirements, for additional requirements.

B. Inspect each wiring device for damage and defects.

C. Test each receptacle to verify operation and proper polarity.

D. Correct wiring deficiencies and replace damaged or defective wiring devices.

3.05 ADJUSTING

A. Adjust devices and wall plates to be flush and level.

3.06 CLEANING

A. Clean exposed surfaces to remove dirt, paint, or other foreign material and restore to match original factory finish.

END OF SECTION

SECTION 26 28 16.13
ENCLOSED CIRCUIT BREAKERS

PART 1 GENERAL

1.01 SECTION INCLUDES

A. Molded case circuit breakers (to be installed in existing electrical distribution equipment).

1.02 RELATED REQUIREMENTS

A. Section 26 05 26 - Grounding and Bonding for Electrical Systems.

B. Section 26 05 53 - Identification for Electrical Systems: Identification products and requirements.

1.03 REFERENCE STANDARDS

A. NECA 1 - Standard for Good Workmanship in Electrical Construction; 2010.

B. NETA ATS - Acceptance Testing Specifications for Electrical Power Equipment and Systems; 2013.

C. NFPA 70 - National Electrical Code; Most Recent Edition Adopted by Authority Having Jurisdiction, Including All Applicable Amendments and Supplements.

D. UL 489 - Molded-Case Circuit Breakers, Molded-Case Switches and Circuit Breaker Enclosures; Current Edition, Including All Revisions.

1.04 ADMINISTRATIVE REQUIREMENTS

A. Coordination:
   1. Verify with manufacturer that molded case circuit breakers are compatible with existing electrical distribution equipment in which they will be installed.
   2. Verify with manufacturer that conductor terminations are suitable for use with the conductors to be installed.
   3. Notify DEDC, LLC of any conflicts with or deviations from Contract Documents. Obtain direction before proceeding with work.

1.05 SUBMITTALS

A. See Section 01 30 00 - Administrative Requirements, for submittal procedures.

B. Product Data: Provide manufacturer's standard catalog pages and data sheets for circuit breakers, enclosures, and other installed components and accessories. Indicate voltage, current and ampere interrupting ratings.
   1. Include characteristic trip curves for each type and rating of circuit breaker upon request.

C. Field Quality Control Test Reports.

1.06 QUALITY ASSURANCE

A. Comply with requirements of NFPA 70.

B. Maintain at the project site a copy of each referenced document that prescribes execution requirements.

C. Manufacturer Qualifications: Company specializing in manufacturing the products specified in this section with minimum three years documented experience.

D. Product Listing Organization Qualifications: An organization recognized by OSHA as a Nationally Recognized Testing Laboratory (NRTL) and acceptable to authorities having jurisdiction.

1.07 DELIVERY, STORAGE, AND HANDLING

A. Store in a clean, dry space. Maintain factory wrapping or provide an additional heavy canvas or heavy plastic cover to protect units from dirt, water, construction debris, and traffic.

B. Handle carefully in accordance with manufacturer's written instructions to avoid damage to enclosed circuit breaker internal components, enclosure, and finish.

1.08 FIELD CONDITIONS

A. Maintain ambient temperature between 23 degrees F and 104 degrees F during and after installation of enclosed circuit breakers.

PART 2 PRODUCTS

2.01 MANUFACTURERS

A. ABB/GE: www.electrification.us.abb.com/#sle.

B. Eaton Corporation: www.eaton.com/#sle.

C. Schneider Electric; Square D Products: www.schneider-electric.us/#sle.

D. Siemens Industry, Inc: www.usa.siemens.com/#sle.

E. Substitutions: See Section 01 60 00 - Product Requirements.

F. Source Limitations: Furnish enclosed circuit breakers and associated components produced by the same (or compatible) manufacturers as the existing electrical distribution equipment in which they will be installed.

2.02 MOLDED CASE CIRCUIT BREAKERS

A. Description: Quick-make, quick-break, over center toggle, trip-free, trip-indicating circuit breakers listed and labeled as complying with UL 489; ratings, configurations, and features as indicated on the drawings.

B. Interrupting Capacity:
   1. Provide circuit breaker(s) with interrupting capacity as required to provide the short circuit current rating(s) indicated.
   2. Fully Rated Systems: Provide circuit breakers with interrupting capacity not less than the short circuit current rating indicated.

C. Conductor Terminations:
   1. Provide mechanical lugs.
   2. Lug Material: Aluminum, suitable for terminating aluminum or copper conductors.

D. Provide thermal magnetic circuit breakers unless otherwise indicated.

E. Thermal Magnetic Circuit Breakers: For each pole, furnish thermal inverse time tripping element for overload protection and magnetic instantaneous tripping element for short circuit protection.

F. Multi-Pole Circuit Breakers: Furnish with common trip for all poles.

PART 3 EXECUTION

3.01 EXAMINATION

A. Verify that field measurements are as indicated.

B. Verify that the ratings of the enclosed circuit breakers are consistent with the indicated requirements.

C. Verify that mounting surfaces are ready to receive enclosed circuit breakers.

D. Verify that conditions are satisfactory for installation prior to starting work.

3.02 INSTALLATION

A. Install products in accordance with manufacturer's instructions.

B. Perform work in accordance with NECA 1 (general workmanship).

C. Provide grounding and bonding in accordance with Section 26 05 26.

D. Identify molded case circuit breakers in accordance with Section 26 05 53.

3.03 FIELD QUALITY CONTROL

A. See Section 01 40 00 - Quality Requirements, for additional requirements.

B. Inspect and test in accordance with manufacturer's instructions and NETA ATS, except Section 4.

C. Perform inspections and tests listed in NETA ATS, Section 7.6.1.1. Tests listed as optional are not required.

D. Correct deficiencies and replace damaged or defective circuit breakers.

E. Perform several mechanical ON-OFF operations on each circuit breaker.

F. Verify circuit continuity on each pole in closed position.

G. Determine that circuit breaker will trip on overcurrent condition, with tripping time to NEMA AB 1 requirements.

H. Include description of testing and results in test report.

3.04 ADJUSTING

A. Tighten electrical connectors and terminals, including grounding connections, according to manufacturer's published torque-tightening values. Where manufacturer's torque values are not indicated, use those specified in UL 486A and UL 486B.

3.05 CLEANING

A. Clean dirt and debris from circuit breaker enclosures and components according to manufacturer's instructions.

B. Repair scratched or marred exterior surfaces to match original factory finish.

END OF SECTION

This page intentionally left blank

SECTION 26 51 00
INTERIOR LIGHTING

PART 1 GENERAL

1.01 SECTION INCLUDES

A. Interior luminaires.

B. Emergency lighting units.

C. Exit signs.

D. Ballasts and drivers.

E. Emergency power supply units.

F. Lamps.

G. Accessories.

1.02 RELATED REQUIREMENTS

A. Section 26 05 26 - Grounding and Bonding for Electrical Systems.

B. Section 26 05 29 - Hangers and Supports for Electrical Systems.

C. Section 26 05 33.16 - Boxes for Electrical Systems.

D. Section 26 05 53 - Identification for Electrical Systems: Identification products and requirements.

1.03 REFERENCE STANDARDS

A. IES LM-63 - Approved Method: IES Standard File Format for the Electronic Transfer of Photometric Data and Related Information; 2019 (Reaffirmed 2025).

B. IES LM-79 - Approved Method: Electrical and Photometric Measurements of Solid-State Lighting Products; 2008.

C. IES LM-80 - Approved Method: Measuring Luminous Flux and Color Maintenance of LED Packages, Arrays, and Modules; Illuminating Engineering Society; 2015.

D. NECA 1 - Standard for Good Workmanship in Electrical Construction; 2010.

E. NECA/IESNA 500 - Standard for Installing Indoor Commercial Lighting Systems; 2025.

F. NEMA 410 - Performance Testing for Lighting Controls and Switching Devices with Electronic Drivers and Discharge Ballasts; 2011.

G. NEMA LE 4 - Recessed Luminaires, Ceiling Compatibility; 2012.

H. NFPA 70 - National Electrical Code; Most Recent Edition Adopted by Authority Having Jurisdiction, Including All Applicable Amendments and Supplements.

I. NFPA 101 - Life Safety Code; Most Recent Edition Adopted by Authority Having Jurisdiction, Including All Applicable Amendments and Supplements.

J. UL 924 - Emergency Lighting and Power Equipment; Current Edition, Including All Revisions.

K. UL 1598 - Luminaires; Current Edition, Including All Revisions.

L. UL 8750 - Light Emitting Diode (LED) Equipment for Use in Lighting Products; Current Edition, Including All Revisions.

1.04 ADMINISTRATIVE REQUIREMENTS

A. Coordination:

1. Coordinate the installation of luminaires with mounting surfaces installed under other sections or by others. Coordinate the work with placement of supports, anchors, etc. required for mounting. Coordinate compatibility of luminaires and associated trims with mounting surfaces at installed locations.

2. Coordinate the placement of luminaires with structural members, ductwork, piping, equipment, diffusers, fire suppression system components, and other potential conflicts installed under other sections or by others.
3. Coordinate the placement of exit signs with furniture, equipment, signage or other potential obstructions to visibility installed under other sections or by others.
4. Notify DEDC, LLC of any conflicts or deviations from Contract Documents to obtain direction prior to proceeding with work.

1.05 SUBMITTALS

A. See Section 01 30 00 - Administrative Requirements, for submittal procedures.

B. Shop Drawings:
1. Indicate dimensions and components for each luminaire that is not a standard product of the manufacturer.
2. Provide photometric calculations where luminaires are proposed for substitution upon request.

C. Product Data: Provide manufacturer's standard catalog pages and data sheets including detailed information on luminaire construction, dimensions, ratings, finishes, mounting requirements, listings, service conditions, photometric performance, installed accessories, and ceiling compatibility; include model number nomenclature clearly marked with all proposed features.
1. LED Luminaires:
a. Include estimated useful life, calculated based on IES LM-80 test data.
b. Include IES LM-79 test report for proposed substitutions.
2. Provide electronic files of photometric data certified by a National Voluntary Laboratory Accreditation Program (NVLAP) lab or independent testing agency in IES LM-63 standard format upon request.
3. Lamps: Include rated life, color temperature, color rendering index (CRI), and initial and mean lumen output.

D. Field quality control reports.

E. Maintenance Materials: Furnish the following for State of Delaware OMB - Division of Facilities Management's use in maintenance of project.
1. See Section 01 60 00 - Product Requirements, for additional provisions.
2. Extra Lenses and Louvers: Two percent of total quantity installed for each type, but not less than one of each type.

F. Project Record Documents: Record actual connections and locations of luminaires and any associated remote components.

1.06 QUALITY ASSURANCE

A. Comply with requirements of NFPA 70.

B. Maintain at the project site a copy of each referenced document that prescribes execution requirements.

C. Manufacturer Qualifications: Company specializing in manufacturing the products specified in this section with minimum three years documented experience.

D. Product Listing Organization Qualifications: An organization recognized by OSHA as a Nationally Recognized Testing Laboratory (NRTL) and acceptable to authorities having jurisdiction.

1.07 DELIVERY, STORAGE, AND PROTECTION

A. Receive, handle, and store products according to NECA/IESNA 500 (commercial lighting) and manufacturer's written instructions.

B. Keep products in original manufacturer's packaging and protect from damage until ready for installation.

1.08 FIELD CONDITIONS

A. Maintain field conditions within manufacturer's required service conditions during and after installation.

1.09 WARRANTY

A. See Section 01 78 00 - Closeout Submittals, for additional warranty requirements.

B. Provide 5-year manufacturer warranty for LED luminaires, including drivers.

C. Provide 5-year pro-rata warranty for batteries for emergency lighting units.

D. Provide 5-year pro-rata warranty for batteries for self-powered exit signs.

E. Provide 5-year pro-rata warranty for emergency power supply units.

PART 2 PRODUCTS

2.01 LUMINAIRE TYPES

A. Furnish products as indicated in luminaire schedule included on the drawings.

B. Substitutions: See Section 01 60 00 - Product Requirements.

2.02 LUMINAIRES

A. Manufacturers:
   1. Acuity Brands, Inc: www.acuitybrands.com/#sle.
   2. Current Brands (HLI Solutions, Inc): www.currentlighting.com/#sle.
   3. Elite Lighting: www.iuseelite.com/#sle.
   4. H.E. Williams, Inc: www.hew.com/#sle.
   5. ILP, a division of Illumus: www.ilp-inc.com/#sle.
   6. Signify Brands, Inc: www.signify.com/#sle.
   7. Substitutions: See Section 01 60 00 - Product Requirements.

B. Provide products that comply with requirements of NFPA 70.

C. Provide products that are listed and labeled as complying with UL 1598, where applicable.

D. Provide products listed, classified, and labeled as suitable for the purpose intended.

E. Unless otherwise indicated, provide complete luminaires including lamp(s) and all sockets, ballasts, reflectors, lenses, housings and other components required to position, energize and protect the lamp and distribute the light.

F. Unless specifically indicated to be excluded, provide all required conduit, boxes, wiring, connectors, hardware, supports, trims, accessories, etc. as necessary for a complete operating system.

G. Provide products suitable to withstand normal handling, installation, and service without any damage, distortion, corrosion, fading, discoloring, etc.

H. Recessed Luminaires:
   1. Ceiling Compatibility: Comply with NEMA LE 4.
   2. Luminaires Recessed in Insulated Ceilings: Listed and labeled as IC-rated, suitable for direct contact with insulation and combustible materials.

I. LED Luminaires:
   1. Components: UL 8750 recognized or listed as applicable.
   2. Tested in accordance with IES LM-79 and IES LM-80.
   3. LED Estimated Useful Life: Minimum of 50,000 hours at 70 percent lumen maintenance, calculated based on IES LM-80 test data.

2.03 EMERGENCY LIGHTING UNITS

A. Manufacturers:
   1. Acuity Brands, Inc: www.acuitybrands.com/#sle.
   2. Current Brands (HLI Solutions, Inc): www.currentlighting.com/#sle.
   3. Elite Lighting: www.iuseelite.com/#sle.
   4. H.E. Williams, Inc: www.hew.com/#sle.
   5. ILP, a division of Illumus: www.ilp-inc.com/#sle.
   6. Signify Brands, Inc: www.signify.com/#sle.
   7. Substitutions: See Section 01 60 00 - Product Requirements.

B. Description: Emergency lighting units complying with NFPA 101 and all applicable state and local codes, and listed and labeled as complying with UL 924.

C. Operation: Upon interruption of normal power source or brownout condition exceeding 20 percent voltage drop from nominal, solid-state control automatically switches connected lamps to integral battery power for minimum of 90 minutes of rated emergency illumination, and automatically recharges battery upon restoration of normal power source.

D. Battery:
   1. Sealed maintenance-free nickel metal hydride unless otherwise indicated.
   2. Size battery to supply all connected lamps, including emergency remote heads where indicated.

E. Diagnostics: Provide power status indicator light and accessible integral test switch to manually activate emergency operation.

F. Provide low-voltage disconnect to prevent battery damage from deep discharge.

G. Self-Diagnostics: Provide units that self-monitor functionality and automatically perform testing required by NFPA 101 where indicated; provide indicator light(s) to report test and diagnostic status.

H. Accessories:
   1. Provide compatible accessory mounting brackets where indicated or required to complete installation.
   2. Where indicated, provide emergency remote heads that are compatible with the emergency lighting unit they are connected to and suitable for the installed location.

2.04 EXIT SIGNS

A. Description: Exit signs complying with NFPA 101 and applicable state and local codes, and listed and labeled as complying with UL 924.
   1. Number of Faces: Single- or double-face as indicated or as required for installed location.
   2. Directional Arrows: As indicated or as required for installed location.

B. Powered Exit Signs: Internally illuminated with LEDs unless otherwise indicated.
   1. Manufacturers:
      a. Acuity Brands, Inc: www.acuitybrands.com/#sle.
      b. Current Brands (HLI Solutions, Inc): www.currentlighting.com/#sle.
      c. Elite Lighting: www.iuseelite.com/#sle.
      d. H.E. Williams, Inc: www.hew.com/#sle.
      e. ILP, a division of Illumus: www.ilp-inc.com/#sle.
      f. Signify Brands, Inc: www.signify.com/#sle.
      g. Substitutions: See Section 01 60 00 - Product Requirements.
   2. Self-Powered Exit Signs:
      a. Operation: Upon interruption of normal power source or brownout condition exceeding 20 percent voltage drop from nominal, solid-state control automatically switches connected lamps to integral battery power for minimum of 90 minutes of

rated emergency illumination, and automatically recharges battery upon restoration of normal power source.

b. Battery: Sealed, maintenance-free, nickel cadmium unless otherwise indicated.
c. Diagnostics: Provide power status indicator light and accessible integral test switch to manually activate emergency operation.
d. Provide low-voltage disconnect to prevent battery damage from deep discharge.
e. Self-Diagnostics: Provide units that self-monitor functionality and automatically perform testing required by NFPA 101; provide indicator light(s) to report test and diagnostic status.

2.05 BALLASTS AND DRIVERS

A. Manufacturers:
1. As standard per luminaire manufacturers.

B. Ballasts/Drivers - General Requirements:
1. Provide ballasts/drivers with characteristics as indicated in the luminaire schedule included on the drawings.
2. Provide ballasts/drivers containing no polychlorinated biphenyls (PCBs).
3. Minimum Efficiency/Efficacy: Provide ballasts/drivers complying with all current applicable federal and state ballast efficiency/efficacy standards.
4. Electronic Ballasts/Drivers: Inrush currents not exceeding peak currents specified in NEMA 410.

C. Dimmable LED Drivers:
1. Dimming Range: Continuous dimming from 100 percent to five percent relative light output unless dimming capability to lower level is indicated, without flicker.
2. Control Compatibility: Fully compatible with the dimming controls to be installed.

2.06 EMERGENCY POWER SUPPLY UNITS

A. Manufacturers:
1. Dual-Lite: www.currentlighting.com/dual-lite/#sle.
2. Evenlite, Inc: www.evenlite.com/#sle.
3. Iota Engineering, LLC: www.iotaengineering.com/#sle.
4. Lithonia Lighting: www.lithonia.com/#sle.
5. Philips Emergency Lighting/Bodine: www.bodine.com/#sle.
6. Substitutions: See Section 01 60 00 - Product Requirements.
7. Manufacturer Limitations: Where possible, for each type of luminaire provide emergency power supply units produced by single manufacturer.

B. Description: Self-contained emergency power supply units suitable for use with indicated luminaires, complying with NFPA 101 and applicable state and local codes, and listed and labeled as complying with UL 924.

C. Compatibility:
1. Drivers: Compatible standard, energy saving, and dimming AC LED drivers, including those with end of lamp life shutdown circuits.
2. Lamps: Compatible with LED

D. Operation: Upon interruption of normal power source, solid-state control automatically switches connected lamps to emergency power supply for minimum of 90 minutes of rated emergency illumination, and automatically recharges battery upon restoration of normal power source.

E. Battery: Sealed maintenance-free high-temperature nickel cadmium unless otherwise indicated.

F. Emergency Illumination Output:
1. Luminaires with LED Lamps: Operate LED drivers at minimum of 1000 lumens unless otherwise indicated with illumination evenly divided among the drivers.

G. Diagnostics: Provide accessible and visible multi-chromatic combination test switch/indicator light to display charge, test, and diagnostic status and to manually activate emergency operation.

H. Operating Temperature: From 32 degrees F to 122 degrees F unless otherwise indicated or required for the installed location.

I. Accessories:
   1. Provide compatible accessory remote combination test switch/indicator light where indicated or required.

2.07 LAMPS

A. Manufacturers:
   1. As standard per luminaire manufacturers.

B. Lamps - General Requirements:
   1. Unless explicitly excluded, provide new, compatible, operable lamps in each luminaire.
   2. Verify compatibility of specified lamps with luminaires to be installed. Where lamps are not specified, provide lamps per luminaire manufacturer's recommendations.
   3. Minimum Efficiency: Provide lamps complying with all current applicable federal and state lamp efficiency standards.
   4. Color Temperature Consistency: Unless otherwise indicated, for each type of lamp furnish products which are consistent in perceived color temperature. Replace lamps that are determined by DEDC, LLC to be inconsistent in perceived color temperature.

2.08 ACCESSORIES

A. Provide accessory plaster frames for luminaires recessed in plaster ceilings.

PART 3 EXECUTION

3.01 EXAMINATION

A. Verify that field measurements are as indicated.

B. Verify that outlet boxes are installed in proper locations and at proper mounting heights and are properly sized to accommodate conductors in accordance with NFPA 70.

C. Verify that suitable support frames are installed where required.

D. Verify that branch circuit wiring installation is completed, tested, and ready for connection to luminaires.

E. Verify that conditions are satisfactory for installation prior to starting work.

3.02 PREPARATION

A. Provide extension rings to bring outlet boxes flush with finished surface.

B. Clean dirt, debris, plaster, and other foreign materials from outlet boxes.

3.03 INSTALLATION

A. Coordinate locations of outlet boxes provided under Section 26 05 33.16 as required for installation of luminaires provided under this section.

B. Perform work in accordance with NECA 1 (general workmanship).

C. Install products in accordance with manufacturer's instructions.

D. Install luminaires securely, in a neat and workmanlike manner, as specified in NECA 500 (commercial lighting).

E. Provide required support and attachment in accordance with Section 26 05 29.

F. Install luminaires plumb and square and aligned with building lines and with adjacent luminaires.

G. Suspended Ceiling Mounted Luminaires:

1. Do not use ceiling tiles to bear weight of luminaires.
2. Do not use ceiling support system to bear weight of luminaires unless ceiling support system is certified as suitable to do so.
3. Secure surface-mounted and recessed luminaires to ceiling support channels or framing members or to building structure.
4. Secure lay-in luminaires to ceiling support channels using listed safety clips at four corners.
5. In addition to ceiling support wires, provide two galvanized steel safety wire(s), minimum 12 gauge, connected from opposing corners of each recessed luminaire to building structure.
6. See appropriate Division 9 section where suspended grid ceiling is specified for additional requirements.

H. Recessed Luminaires:
1. Install trims tight to mounting surface with no visible light leakage.
2. Non-IC Rated Luminaires: Maintain required separation from insulation and combustible materials according to listing.
3. Luminaires Recessed in Fire-Rated Ceilings: Install using accessories and firestopping materials to meet regulatory requirements for fire rating.

I. Wall-Mounted Luminaires: Unless otherwise indicated, specified mounting heights are to bottom of luminaire.

J. Install accessories furnished with each luminaire.

K. Bond products and metal accessories to branch circuit equipment grounding conductor.

L. Emergency Lighting Units:
1. Unless otherwise indicated, connect unit to unswitched power from same circuit feeding normal lighting in same room or area. Bypass local switches, contactors, or other lighting controls.

M. Exit Signs:
1. Unless otherwise indicated, connect unit to unswitched power from same circuit feeding normal lighting in same room or area. Bypass local switches, contactors, or other lighting controls.

N. Emergency Power Supply Units:
1. For field-installed units, install inside luminaire unless otherwise indicated. Where installation inside luminaire is not possible, install on top of luminaire.
2. Unless otherwise indicated, connect unit to unswitched power from same circuit feeding normal driver(s) in luminaire. Bypass local switches, contactors, or other lighting controls.

O. Identify luminaires connected to emergency power system in accordance with Section 26 05 53.

P. Install lamps in each luminaire.

Q. Lamp Burn-In: Operate lamps at full output for prescribed period per manufacturer's recommendations prior to use with any dimming controls. Replace lamps that fail prematurely due to improper lamp burn-in.

3.04 FIELD QUALITY CONTROL

A. See Section 01 40 00 - Quality Requirements, for additional requirements.

B. Inspect each product for damage and defects.

C. Operate each luminaire after installation and connection to verify proper operation.

D. Test self-powered exit signs, emergency lighting units, and emergency power supply units to verify proper operation upon loss of normal power supply.

E. Correct wiring deficiencies and repair or replace damaged or defective products. Repair or replace excessively noisy ballasts as determined by DEDC, LLC.

3.05 ADJUSTING

A. Aim and position adjustable luminaires to achieve desired illumination as indicated or as directed by DEDC, LLC. Secure locking fittings in place.

B. Aim and position adjustable emergency lighting unit lamps to achieve optimum illumination of egress path as required or as directed by DEDC, LLC or authority having jurisdiction.

C. Exit Signs with Field-Selectable Directional Arrows: Set as indicated or as required to properly designate egress path as directed by DEDC, LLC or authority having jurisdiction.

3.06 CLEANING

A. Clean surfaces according to NECA 500 (commercial lighting) and manufacturer's instructions to remove dirt, fingerprints, paint, or other foreign material and restore finishes to match original factory finish.

3.07 CLOSEOUT ACTIVITIES

A. See Section 01 78 00 - Closeout Submittals, for closeout submittals.

B. See Section 01 79 00 - Demonstration and Training, for additional requirements.

C. Demonstration: Demonstrate proper operation of luminaires to DEDC, LLC, and correct deficiencies or make adjustments as directed.

D. Just prior to Substantial Completion, replace all lamps that have failed.

3.08 PROTECTION

A. Protect installed luminaires from subsequent construction operations.

3.09 LUMINAIRE SCHEDULE - SEE DRAWINGS

END OF SECTION

SECTION 26 56 00
EXTERIOR LIGHTING

PART 1 GENERAL

1.01 SECTION INCLUDES

A. Exterior luminaires.

B. Ballasts and drivers.

C. Lamps.

1.02 RELATED REQUIREMENTS

A. Section 26 05 29 - Hangers and Supports for Electrical Systems.

B. Section 26 05 33.16 - Boxes for Electrical Systems.

1.03 REFERENCE STANDARDS

A. IES LM-63 - Approved Method: IES Standard File Format for the Electronic Transfer of Photometric Data and Related Information; 2019 (Reaffirmed 2025).

B. IES LM-79 - Approved Method: Electrical and Photometric Measurements of Solid-State Lighting Products; 2008.

C. IES LM-80 - Approved Method: Measuring Luminous Flux and Color Maintenance of LED Packages, Arrays, and Modules; Illuminating Engineering Society; 2015.

D. NECA 1 - Standard for Good Workmanship in Electrical Construction; 2010.

E. NECA/IESNA 501 - Standard for Installing Exterior Lighting Systems; 2006.

F. NEMA 410 - Performance Testing for Lighting Controls and Switching Devices with Electronic Drivers and Discharge Ballasts; 2011.

G. NFPA 70 - National Electrical Code; Most Recent Edition Adopted by Authority Having Jurisdiction, Including All Applicable Amendments and Supplements.

H. UL 1598 - Luminaires; Current Edition, Including All Revisions.

I. UL 8750 - Light Emitting Diode (LED) Equipment for Use in Lighting Products; Current Edition, Including All Revisions.

1.04 ADMINISTRATIVE REQUIREMENTS

A. Coordination:
   1. Notify DEDC, LLC of any conflicts or deviations from Contract Documents to obtain direction prior to proceeding with work.

1.05 SUBMITTALS

A. See Section 01 30 00 - Administrative Requirements, for submittal procedures.

B. Shop Drawings:
   1. Provide photometric calculations where luminaires are proposed for substitution upon request.

C. Product Data: Provide manufacturer's standard catalog pages and data sheets including detailed information on luminaire construction, dimensions, ratings, finishes, mounting requirements, listings, service conditions, photometric performance, weight, effective projected area (EPA), and installed accessories; include model number nomenclature clearly marked with all proposed features.
   1. LED Luminaires:
      a. Include estimated useful life, calculated based on IES LM-80 test data.
      b. Include IES LM-79 test report upon request.

2. Provide electronic files of photometric data certified by a National Voluntary Laboratory Accreditation Program (NVLAP) lab or independent testing agency in IES LM-63 standard format upon request.
3. Lamps: Include rated life and initial and mean lumen output.

D. Field Quality Control Reports.
1. Include test report indicating measured illumination levels.

E. Maintenance Materials: Furnish the following for State of Delaware OMB - Division of Facilities Management's use in maintenance of project.
1. See Section 01 60 00 - Product Requirements, for additional provisions.

1.06 QUALITY ASSURANCE

A. Comply with requirements of NFPA 70.

B. Maintain at the project site a copy of each referenced document that prescribes execution requirements.

C. Manufacturer Qualifications: Company specializing in manufacturing the products specified in this section with minimum three years documented experience.

D. Product Listing Organization Qualifications: An organization recognized by OSHA as a Nationally Recognized Testing Laboratory (NRTL) and acceptable to authorities having jurisdiction.

1.07 DELIVERY, STORAGE, AND HANDLING

A. Receive, handle, and store products according to NECA/IESNA 501 and manufacturer's written instructions.

B. Keep products in original manufacturer's packaging and protect from damage until ready for installation.

1.08 WARRANTY

A. See Section 01 78 00 - Closeout Submittals, for additional warranty requirements.

B. Provide 10-year manufacturer warranty for all LED luminaires, including drivers.

PART 2 PRODUCTS

2.01 LUMINAIRE TYPES

A. Furnish products as indicated in luminaire schedule included on the drawings.

B. Substitutions: See Section 01 60 00 - Product Requirements.

2.02 LUMINAIRES

A. Manufacturers:
1. Acuity Brands, Inc: www.acuitybrands.com/#sle.
2. Current Brands (HLI Solutions, Inc): www.currentlighting.com/#sle.
3. Elite Lighting: www.iuseelite.com/#sle.
4. H.E. Williams, Inc: www.hew.com/#sle.
5. ILP, a division of Illumus: www.ilp-inc.com/#sle.
6. Signify Brands, Inc: www.signify.com/#sle.
7. Substitutions: See Section 01 60 00 - Product Requirements.

B. Provide products that comply with requirements of NFPA 70.

C. Provide products that are listed and labeled as complying with UL 1598, where applicable.

D. Provide products listed, classified, and labeled as suitable for the purpose intended.

E. Unless otherwise indicated, provide complete luminaires including lamp(s) and all sockets, ballasts, reflectors, lenses, housings and other components required to position, energize and protect the lamp and distribute the light.

F. Unless specifically indicated to be excluded, provide all required conduit, boxes, wiring, connectors, hardware, poles, foundations, supports, trims, accessories, etc. as necessary for a complete operating system.

G. Provide products suitable to withstand normal handling, installation, and service without any damage, distortion, corrosion, fading, discoloring, etc.

H. LED Luminaires:
   1. Components: UL 8750 recognized or listed as applicable.
   2. Tested in accordance with IES LM-79 and IES LM-80.
   3. LED Estimated Useful Life: Minimum of 50,000 hours at 70 percent lumen maintenance, calculated based on IES LM-80 test data.

I. Exposed Hardware: Stainless steel.

2.03 BALLASTS AND DRIVERS

A. Manufacturers:
   1. As standard per luminaire manufacturers.

B. Ballasts/Drivers - General Requirements:
   1. Provide ballasts containing no polychlorinated biphenyls (PCBs).
   2. Minimum Efficiency/Efficacy: Provide ballasts complying with all current applicable federal and state ballast efficiency/efficacy standards.
   3. Electronic Ballasts/Drivers: Inrush currents not exceeding peak currents specified in NEMA 410.
   4. Emergency Power Supply Units: Installed in exterior luminaires where required to meet code requirements for emergency egress illumination (refer to drawings for locations and luminaire schedule for details). Emergency power supply units shall comply with NFPA 101 and all applicable state and local codes, and shall be listed and labeled as complying with UL 924. Provide battery heaters for use in cold weather environments.

2.04 LAMPS

A. Manufacturers:
   1. As standard per luminaire manufacturers.

B. Lamps - General Requirements:
   1. Unless explicitly excluded, provide new, compatible, operable lamps in each luminaire.
   2. Verify compatibility of specified lamps with luminaires to be installed. Where lamps are not specified, provide lamps per luminaire manufacturer's recommendations.
   3. Minimum Efficiency: Provide lamps complying with all current applicable federal and state lamp efficiency standards.
   4. Color Temperature Consistency: Unless otherwise indicated, for each type of lamp furnish products which are consistent in perceived color temperature. Replace lamps that are determined by the DEDC, LLC to be inconsistent in perceived color temperature.

PART 3 EXECUTION

3.01 EXAMINATION

A. Verify that field measurements are as indicated.

B. Verify that outlet boxes are installed in proper locations and at proper mounting heights and are properly sized to accommodate conductors in accordance with NFPA 70.

C. Verify that suitable support frames are installed where required.

D. Verify that branch circuit wiring installation is completed, tested, and ready for connection to luminaires.

E. Verify that conditions are satisfactory for installation prior to starting work.

3.02 PREPARATION

A. Provide extension rings to bring outlet boxes flush with finished surface.

B. Clean dirt, debris, plaster, and other foreign materials from outlet boxes.

3.03 INSTALLATION

A. Coordinate locations of outlet boxes provided under Section 26 05 33.16 as required for installation of luminaires provided under this section.

B. Perform work in accordance with NECA 1 (general workmanship).

C. Install products in accordance with manufacturer's instructions.

D. Install luminaires in accordance with NECA/IESNA 501.

E. Provide required support and attachment in accordance with Section 26 05 29.

F. Install luminaires plumb and square and aligned with building lines and with adjacent luminaires.

G. Wall-Mounted Luminaires: Unless otherwise indicated, specified mounting heights are to bottom of luminaire.

H. Install accessories furnished with each luminaire.

I. Bond products and metal accessories to branch circuit equipment grounding conductor.

J. Install lamps in each luminaire.

3.04 FIELD QUALITY CONTROL

A. See Section 01 40 00 - Quality Requirements, for additional requirements.

B. Inspect each product for damage and defects.

C. Operate each luminaire after installation and connection to verify proper operation.

D. Correct wiring deficiencies and repair or replace damaged or defective products. Repair or replace excessively noisy ballasts as determined by DEDC, LLC.

E. Measure illumination levels at night with calibrated meters to verify compliance with performance requirements. Record test results in written report to be included with submittals.

3.05 ADJUSTING

A. Aim and position adjustable luminaires to achieve desired illumination as indicated or as directed by DEDC, LLC. Secure locking fittings in place.

B. Luminaires with Field-Rotatable Optics: Position optics according to manufacturer's instructions to achieve lighting distribution as indicated or as directed by DEDC, LLC.

3.06 CLEANING

A. Clean surfaces according to NECA/IESNA 501 and manufacturer's instructions to remove dirt, fingerprints, paint, or other foreign material and restore finishes to match original factory finish.

3.07 CLOSEOUT ACTIVITIES

A. See Section 01 78 00 - Closeout Submittals, for closeout submittals.

B. See Section 01 79 00 - Demonstration and Training, for additional requirements.

C. Demonstration: Demonstrate proper operation of luminaires to DEDC, LLC, and correct deficiencies or make adjustments as directed.

D. Just prior to Substantial Completion, replace all lamps that have failed.

3.08 PROTECTION

A. Protect installed luminaires from subsequent construction operations.

3.09 LUMINAIRE SCHEDULE - SEE DRAWINGS

END OF SECTION

This page intentionally left blank

Standard ID:	NE-Cabling-002
Title:	**Structured Cabling System Standards and Specifications for State-Managed Facilities**
Revision Number:	8
Domain:	Network and Storage
Discipline:	Cabling
Effective:	7/21/2008
Reviewed:	1/29/2021
Approved By:	Chief Information Officer
Sponsor:	Chief Operating Officer

A. Authority: Title 29 Chapter 90C Delaware Code, §9004C – General Powers, duties and functions of DTI "2) Create, implement and enforce statewide and agency technology solutions, policies, standards and guidelines, including as recommended by the CIO"

B. Applicability: Applies to all State of Delaware communications and computing resources. DTI is an Executive Branch Agency and has no authority over the customers in Legislative and Judicial Branches, as well as Local Education Agencies, and other Federal and Local Government entities that use these resources. However, all users, including these entities, must agree to abide by all policies, standards promulgated by DTI as a condition of funding, access and continued use of these resources.

C. Purpose: Cable configuration and installation is critical to providing connectivity in State buildings. This standard provides guidance for the design and installation of cabling. This standard provides guidance and requirements for data, voice, and CATV structured cabling systems and support infrastructure in all State owned and leased facilities and buildings.

Table of Contents

PART 1 Scope 3
PART 2 Process 3
PART 3 Executive Summary 3
PART 4 Objective 4
PART 5 Credits 5
PART 6 Introduction 5
PART 7 Procedures 8
PART 8 Horizontal Distribution System 9
PART 9 Communications/Data Rooms/Closets (General) 11
PART 10 MDF & IDF Product Specifications 25
PART 11 Information Outlets 37
PART 12 Cable Routing Systems 42
PART 13 Cabling-General 43
PART 14 Horizontal CABLING - Category 6 UTP Data 44
PART 15 Vertical Distribution Systems 47
PART 16 Campus Cabling 50
PART 17 Patch Cables 51
PART 18 Fire Stop - Penetration Sealant 55
PART 19 Testing 55
PART 20 Appendix A – Communications Planning Checklist 60
PART 21 Appendix B - Cable Installation Checklist 61
PART 22 Appendix C - Quality Assurance 62
PART 23 Appendix D - Codes, Regulations and Standards 63
PART 24 Appendix E - Warranty 63
PART 25 Appendix F - Bid/Quote Response Format 63
PART 26 Appendix G - Outside - DELDOT Specific Requirements - Traffic Construction… 65
PART 27 Appendix H - Certified Contractor List 69
PART 28 Appendix I – Approved Equivalent Vendors 70

PART 1 SCOPE

A. **Areas Covered:** This standard covers the best practices and installation requirements for Voice, Data, CATV cabling and support structures including conduits and raceways, Voice and Data rooms and closets.

B. **Environments:** This standard applies to all State owned and leased building and office spaces. It is concerned with all Data, Voice and CATV cabling projects, whether they are for new construction or revisions additions and upgrades to existing systems.

PART 2 PROCESS

A. **Adoption:** These standards have been adopted by the Department of Technology and Information (DTI) through the Technology and Architecture Standards Committee (TASC) and are applicable to all Information Technology use throughout the State of Delaware.

B. **Revision:** Technology is constantly evolving; therefore, the standards will need to be regularly reviewed. It is the intent of the TASC to review each standard annually. The TASC is open to suggestions and comments from knowledgeable individuals within the State, although we ask that they be channeled through your Information Resource Manager (IRM).

C. **Contractors:** Contractors or other third parties are required to comply with these standards when proposing technology solutions to DTI or other State entities. Failure to do so could result in rejection of the proposed technology solution. For further guidance, or to seek review of a component that is not rated below, contact the TASC at dti_tasc@delaware.gov.

D. **Implementation responsibility:** DTI and/or the organization's technical staff will implement these best practices during the course of normal business activities, including business case review, architectural review, project execution and the design, development, or support of systems.

E. **Enforcement:** DTI will enforce these best practices during the course of normal business activities, including business case and architectural review of proposed projects and during the design, development, or support of systems. These best practices may also be enforced by others during the course of their normal business activities, including audits and design reviews.

F. **Contact us:** Any questions or comments should be directed to dti_tasc@delaware.gov.

PART 3 EXECUTIVE SUMMARY

Because of ever-advancing Industry Standards and new Alliances between Cable and Hardware Manufactures and Vendors, this document seeks to enhance and clarify the State of Delaware's wiring and cabling standards and specifications for Structured Cabling Systems. Approved Contractors under State of Delaware Contract No. GSS16441-DATA_CBL are required to adhere to these specifications and standards.

The structured cabling system will support Voice, Data, and imaging applications within State-owned and -leased office facilities. This document describes the Structured Cabling System requirements to be met in the proposals for Communications cabling by Vendors and Contractors. These requirements encompass all materials, design, engineering, installation, supervision, and training services for a Structured Cabling System.

The following are examples of the Structured Cabling Systems that can be bid for new construction and whole building renovations, in which case all building structured cabling wiring is replaced. The choice of a Structured Cabling System is not limited to the Vendors or Manufactures listed below. The Channel Solutions shall be bid when possible. If a Link solution is bid the State Contact, PM, or DTI (Department of Technology and Information) must authorize the installation.

In new construction projects, the default cabling infrastructure shall be Category 6 unless specified otherwise. Where building renovations and additions do not require the removal of the existing structured cabling system, the existing cabling in conjunction with new cabling should maintain the system warranties. If the existing structured cabling system is not Category 5e or better, it must be upgraded to CAT6 or better with a matching patch panel.

- Hubbell Premise Wiring
- Ortronics
- Panduit
- Systimax

A. Terms and Conditions of Bids/quotes

1. An approved Contractors bid submittal should be based on the materials, systems, equipment, and Standards described in this document and in the bid response format of the attached example. Refer to Appendix G. All bids must be submitted in accordance with the specifications and information contained herein, as well as with any addenda, if required.
2. The bid package shall be accompanied by a presale warranty commitment, binding the Installation Contractor and Manufacturer to the customer-selected extended warranty package and adhere to the Additional Terms and Conditions as described in Delaware Contract No. GSS16441-DATA_CBL.
3. At any point in time, should you require clarification or have any questions pertaining to the content of this document, please call The State of Delaware Department of Technology and Information (DTI). 302-739-9500

PART 4 OBJECTIVE

This document has been developed as a source of information to assist in the design, implementation and maintenance of Voice, Data and Broad Band communications systems. It contains standards and specifications which guide users through structured cabling system design, planning, and installation.

To maximize the usefulness of this document, access to the various TIA/EIA (Telecommunications Industry Association/Electronic Industries Alliance), IEEE (Institute of Electrical and Electronics Engineers), BICSI, (Building Industry Consulting Service International), NEC (National Electrical Code), NFPA (National Fire Protection Association) Communications Standards, and implementation and installation Manuals for further reference is required. This document assumes that users have communications knowledge and training in all aspects of design, implementation, installation, and testing of a Voice/Data communications system.

This document does not address safety issues associated with use. It is the individual's responsibility to use established and appropriate safety and health practices and to determine the applicability of all regulations.

PART 5 CREDITS

Communications Cabling Construction
Developed by:
State of Delaware Department of Technology & Information
801 Silver Lake Blvd. Dover, DE
19904

The content of this document is drawn from experience, as well as other documents and manuals, including the following:

- NEC 2011/2013 Code book
- NFPA-70 Publications
- TIA/EIA Communications Building Wiring Standards
- IEEE Publications & Standards
- BICSI Communications Distribution Design and Installation Publications
- MOTOROLA R56 Standards and Guideline for Communications
- Various Manufactures Publications and Requirements

PART 6 INTRODUCTION

Any Structured Universal Cabling System installed for the Agencies of the State of Delaware is designed to meet known and anticipated technology needs within the State. An advanced building cabling system provides for more than communication services; it provides an infrastructure for an institution's entire communications network. Instead of being a basic utility, it is as important as the high-tech systems that transmit signals over it and is an integral component of the State's overall information network.

These designs provide a universal and flexible cabling system for workstations, conference rooms, and laboratories. Today's cabling system must be multi- functional and provide service for telephones, computers, fax machines, LANs, WANs, broad band fiber optic and coaxial systems (CATV, SATV, CCTV.), Data Centers, computer-aided design workstations, Audio Video systems (AV), and other technologies. For a cabling system to be capable of meeting today's technology and institutional demands, it must have high bandwidth capacity and transmission speed while being extremely flexible.

This wiring architecture incorporates the applicable ANSI/EIA/TIA standards, BICSI guidelines and the latest technologies. This cabling distribution plan can integrate all types of systems from a variety of vendors. The design uses a subsystem approach, which allows for changes in the system without affecting other parts of the system. The Main Distribution Frame (MDF) and Intermediate Distribution Frame (IDF) Room equipment racks are designed to allow for growth, and the cable routing is accomplished through the provision of cable trays, conduits, sleeves, raceways, and cable hangers where required. Ease of administration and recordkeeping for moves and changes is readily apparent, as is the flexibility that a structured cabling system provides.

The wiring medium for the Communications Cable Network consists of Category 6+– 6a 24AWG Unshielded Twisted Pair (UTP) for station cabling and multi pair twisted copper for backbone cabling to support low-speed voice or Data, Category 6+ or 6a for high speed LAN technologies, and 50/125 micron multi-mode fiber optic cable and 50/125 micron multi-mode as well as single mode 8.3/125 micron for even higher bandwidth requirements. The unshielded twisted pair (UTP) Category 6+ or 6a LAN cables can support Data transmission rates of 100, 250 and 500 up to 1000Mb/Sec respectively according to EIA/TIA Standards and manufacturers' specifications.

These leading edge components, combined with the open wiring architecture, provide the technology, flexibility, and modularity that allow the system to grow and change to meet changing needs.

The central distribution location of the system is the Fiber Optic, coaxial and Copper Main Distribution Frame (MDF) located within the centrally located MDF/IDF Room of each building. Various fiber optic, coaxial and copper riser cables terminate on the MDF and extend to the Communications Rooms/Closets (IDFs) located throughout the buildings. Each building typically has one MDF/IDF Room and a varying number of IDF rooms/closets dictated by the horizontal station cabling limitation of 100 meters for high performance cable. The distance from the information outlet to the termination within the IDF is limited to 90 meters (the permanent link). The IDF room/closet houses the Intermediate Distribution Frame (IDF), Copper and Fiber Optic IDF Patch Panels, Local Area Network (LAN) equipment, and other electronics. Both the riser cables and the horizontal station cables feeding the floor's workstations information outlets terminate in the IDF on Data patch panels, Voice 110 hardware, and Fiber Optic Patch Panels. These termination points act as the cross-connect point between the MDF and the floor that is being served. Large floors are divided into zones, via an imaginary line (within 90 meters of the respective IDF), with each zone being served by its respective IDF room/closet. (See figure 1)

Each work area and workstation is served by an information outlet, which provides the jacks for plugging in telephones, computers, broad band coaxial systems, fax machines, modems, and other devices at the desktop. The information outlets are served by varying sets of cables consisting of fiber optic and copper technologies, which originate in the IDF Room. IDF outlets are typically displayed as varying types of triangles (shaded, half-shaded, etc.) on blueprints. (See figure 2)

A subsystem architectural approach, using the latest technologies, provides a comfortable level of assurance that the system will support new applications and industry standards as they emerge.

FIGURE 1

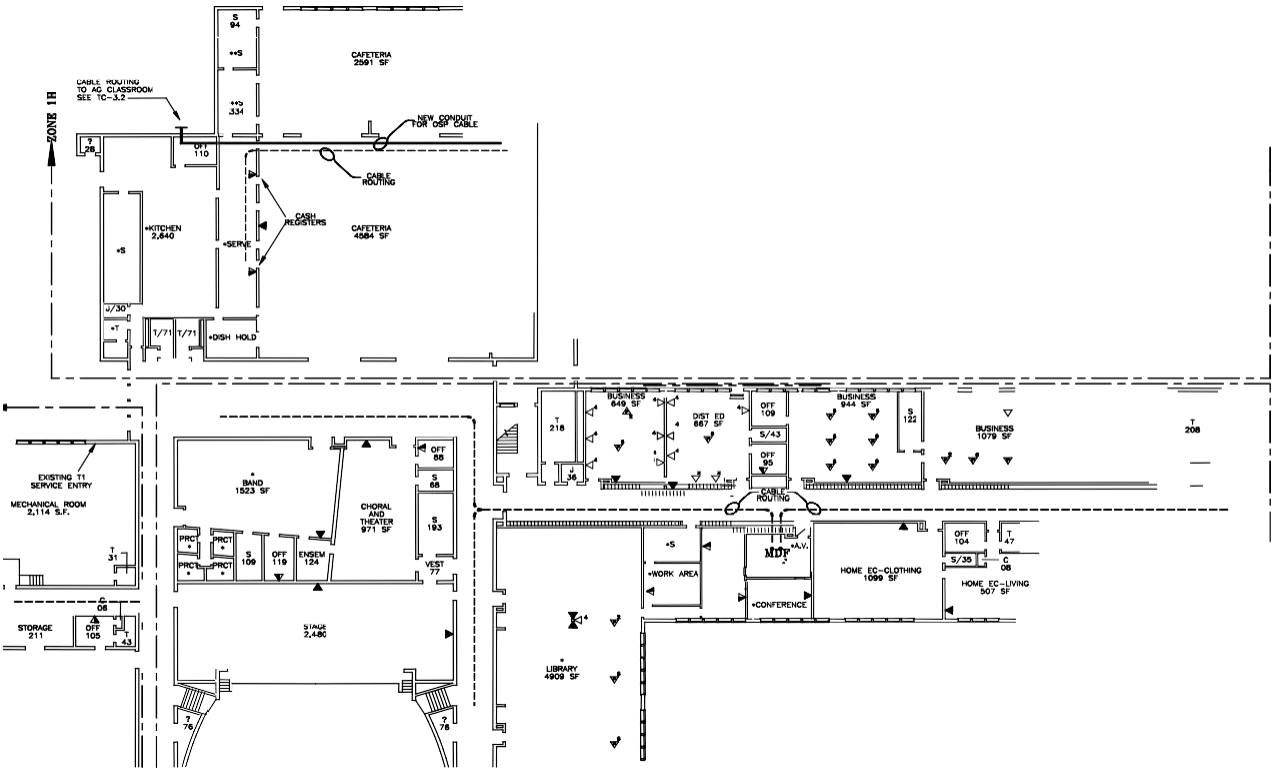
CABLE ROUTING TO AG CLASSROOM SEE TC-3.2
ZONE 1B
CAFETERIA 2591 SF
NEW CONDUIT FOR OSP CABLE
CABLE ROUTING
CASH REGISTERS
CAFETERIA 4584 SF
KITCHEN 2,840
SERVE
DISH HOLD
EXISTING T1 SERVICE ENTRY
MECHANICAL ROOM 2,114 S.F.
STORAGE 211
BAND 1523 SF
CHORAL AND THEATER 971 SF
ENSEM 124
STAGE 2,480
BUSINESS 649 SF
DIST ED 667 SF
BUSINESS 944 SF
BUSINESS 1079 SF
CABLE ROUTING
WORK AREA
MDF
A.V.
CONFERENCE
HOME EC-CLOTHING 1099 SF
HOME EC-LIVING 507 SF
LIBRARY 4909 SF

FIGURE 2

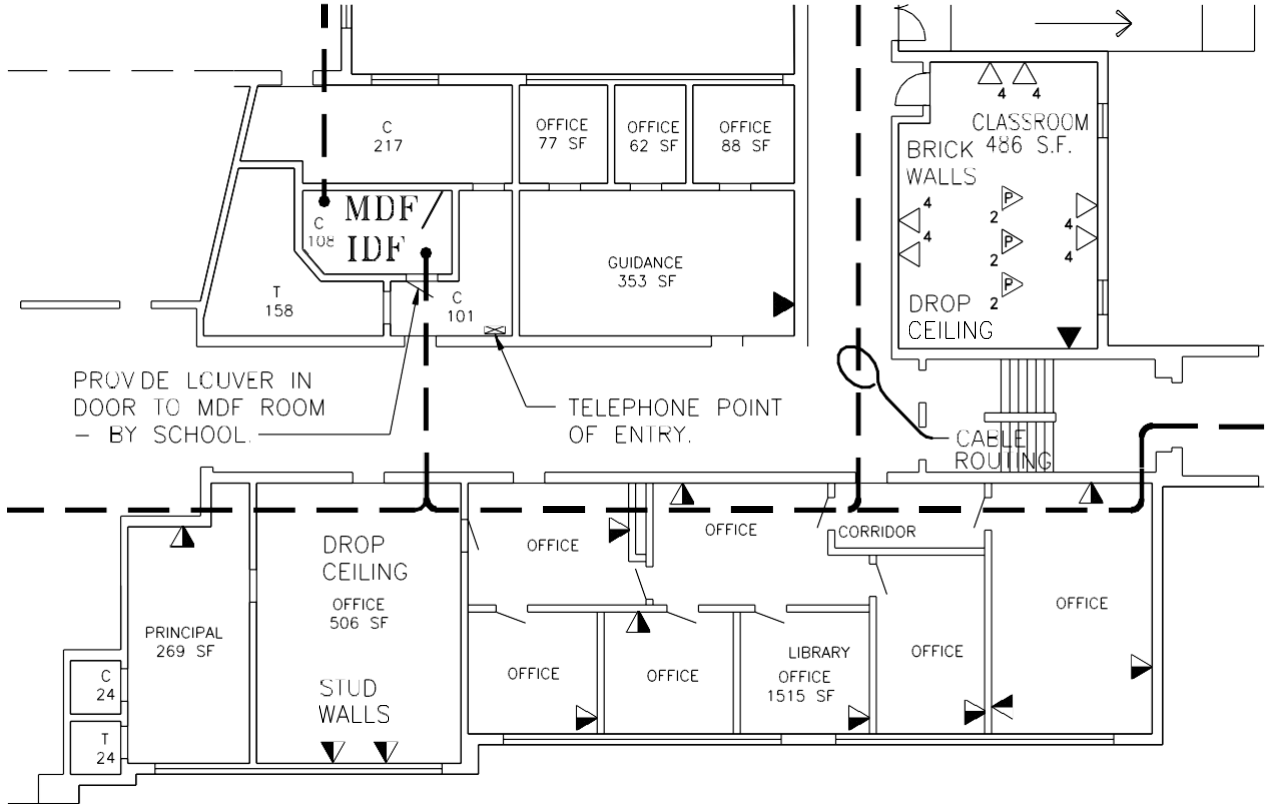

PART 7 PROCEDURES

Designing a cable system for an institution involves various organizations and individuals and requires a great deal of coordination. Once an institution is designated for wiring, AutoCAD drawings of the floor plans need to be acquired. AutoCAD is a type of computer aided drafting (CAD) format. These files are plotted and converted to blueprints that serve as the working drawings for site surveys and engineering purposes. Based on interviews with the agency's staff and Technical Coordinator will draw triangles on the drawing displaying the locations that information outlets are to be located. Also, tentative locations for the Communications/Data rooms/closets will be marked on the drawings. This information will be approved by the institution's officials and sent to the engineering team.

The engineers will survey the building—floor plans for new construction—and evaluate the communications rooms/closets, plan cable routing, and review the information outlet locations. The necessary adjustments will be made during the site survey, and the engineer will leave the site with the proper approvals from the agency's management if there are major changes such as room relocations.

The engineering team will then design the cable system for the building. The end product will be submitted to the agency's Technical Coordinator for comment and/or revision. If no adjustments are necessary, the blueprints are issued to the contractor for construction.

PART 8 HORIZONTAL DISTRIBUTION SYSTEM

The horizontal structured cable plant is the portion of the communications wiring system that extends from the information outlet to the Communications/Data room/closet.

A. Horizontal Distribution System General

1. The horizontal distribution system includes the:
   - Information outlet at the workstation
   - Cables connecting the workstation to the Communications/Data room/closet
   - Intermediate routing and distribution systems
2. The horizontal distribution system should be configured in a star topology. All communications outlets within a work area should be connected to a single Communications/Data room/closet, as defined by the zone concept.
3. This infrastructure must serve all of the Communications requirements of the agency or owner.
4. Communications applications served by the horizontal system can include:
   - Voice (e.g., telephones)
   - Data (e.g., terminal connectivity, modems, etc.)
   - Local area networks (e.g. Ethernet)
   - Audio & Video (e.g., CATV, video conferencing and security monitoring)
   - Graphics & Imaging
5. When designing a horizontal distribution system, include capacity to satisfy long- term requirements as well as initial plans. Ensure that the distribution system has the flexibility to accommodate necessary moves, additions, changes, and system growth.
6. After construction, the horizontal distribution system is typically difficult to access. Therefore the time, effort, coordination, and skills required for changes can be extremely costly. In addition, access to the horizontal distribution system frequently causes disruption to the user community.
7. All Horizontal Workstation Communications and broad band coaxial system cabling will be "home-run" from the information outlet location to the termination point within the corresponding IDF or MDF/IDF room.
8. Horizontal cable paths will be in a "streets and avenues" manner, typically following main walkways.
9. Horizontal cables are to be fastened onto hangers five feet apart with all cables bundled with tie wraps, and are to have a small amount of slack visible.
10. Cables must be supported by its own support system and not rest on any structures or the hung ceiling. Cables are not to be fastened to ducts, pipes, conduits, or any other existing structures. Cable bundles should be secured to the slab overhead to avoid any conflict with or EMI from flexible electrical conduits, transformers, motors, etc. (Follow the TIA-EIA 569-D.2 Pathways requirements)
11. Some cabling shall run to workstation and other outlets through cavities in the dry wall and openings in sheet metal or wooden studs within the dry wall construction. The sheet metal studs will not have gaskets for this purpose, so it is the Contractor's responsibility to exercise extreme care in snaking cable through these areas, so as to avoid damage to the cable jacketing.

12. The building's horizontal wiring plan is to be installed on all floors from the information outlet to the termination point within the associated IDF Room.

13. Horizontal cable will be installed onto "J" hooks (similar to B-Line BCH series) or equivalent in the ceiling or tops of walls near ceiling. Cables are to be fastened to "J" hooks or equivalent every 5 feet. The cable contractor is to provide and furnish the "J" hooks.

14. All station cable (horizontal) and tie cables that run from relay racks to the wall- mounted frames are to be plenum-rated.

B. Horizontal Communications Cable Specification

1. For each type of information outlet indicated on the attached drawings, the contractor shall furnish all of the following equipment, install it in the correct configuration, and test it.

2. All cabling, outlets, and termination patch panels used for the Category 6+ -6A data system must be provided by a single manufacturer and shall be certified as part of the 25 year minimum warranty- Where the installer chooses to use one (1) manufacturer for cabling and a different manufacturer for the outlets and termination patch panels for the Category 6+ -6A data system, the two (2) manufacturers must prove to have compliant interconnecting hardware and shall be certified as part of the 25 year minimum warranty.

3. All Category 6+ and 6a UTP & Fiber cabling is to be handled and terminated in accordance with the Manufacturer's Premises Communications Application and Installation Guide.

4. In addition to the above manufacturer's standards, all applicable ANSI/TIA/EIA-568-C Category 6 and Fiber Optic Cable standards are to be strictly adhered to.

5. The fiber optic cable is to be terminated on both ends with an LC type connector on the patch panels.

6. The contractor is to use Plenum cable for all station 4-pair copper, coaxial, and 2-strand fiber cabling.

7. Plan routes to ensure that the proposed route on the plans falls within the EIA/TIA distance limitations (90 meters after termination) for horizontal cabling.

8. Cables serving information outlets that cannot be routed down wall cavities will be enclosed in latching surface-mount raceways, anchored (not with adhesives) to walls. Contractor will provide all raceway fittings to allow for level and plumb routes from ceiling to information outlet. Proper fill ratios must be observed. Contractor may reference the manufacturer's catalogs or specifications for correct fittings and fill ratios. Contractor must use all accessory fittings required in order to build a neat and functional installation. This same method will apply to routing horizontal cables to workstation outlets where ceilings are not accessible**.**

9. The RG-6U Plenum Cable and the RG11U Plenum Cable are to be terminated with F type connector or connectors. The RG6U Coaxial Station cabling will be terminated onto a rack or wall-mounted "F" Connector Patch Panel located in the IDF Room.

10. The IDF Room side of the Category 6+ – 6a four-pair cables serving a standard outlet will be punched down on individual 110 (Category 6+–6a) modular patch panels, 568B wired. The patch panels will be mounted in the relay racks within the IDF rooms.

11. The contractor is to install a 2U wire management panel between all patch panels and above the first panel as well as one below the last panel.

12. In locations that have wall-mounted racks, the rack should be hinged to swing out to access the back of patch panels with associated cable management.

13. Contractor is to label both the front and the rear of the patch panels. The terminations are to follow this sequence: Workstation 001A, 001B, 002A, 002B. It is acceptable to change numbering for floor or closet designation.

C. Zones

1. A zone is a contiguous area in which all horizontal wiring is homed to a single communications closet within 90 meters from the IDF.

2. To maintain an orderly, understandable wiring system, it is imperative that the horizontal distribution system be structured in zones.

3. Within a zone, all communications wiring is run to a single communications closet.

4. Other zones use different Communications/Data rooms/closets. Cross-zone horizontal wiring is prohibited. Connections between zones are provided via the vertical distribution system.

PART 9 COMMUNICATIONS/DATA ROOMS/CLOSETS (GENERAL)

The Communications/Data room/closet is a concentration point for communications and LAN services. In this room, premise wiring and cabling are terminated and cross-connected. In addition, active networking devices such as switches are placed here. Communications/Data rooms/closets provide a safe area for housing distribution cabling, premise equipment, and termination fields. These rooms/closets are a focal point for communications services.

In addition to supporting in-house connectivity, the MDF Communications/Data room/closet often provides a termination point for the local telephone company. The entrance facility, or demarcation point (de-mark), is the location where outside communications services, such as copper telephone lines, fiber optic Data circuits, and CATV, are delivered to the building. Typically, distribution of communications services within the building originates at this point and is the responsibility of the owner.

Special considerations must be given when providing the building entrance pathways for the copper, fiber optic, and coaxial cables that service providers will install in to the building de-mark. It is the owner's responsibility to provide this pathway into the building. Contact DTI for standards and specifications for building entrances.

The following section details the basic requirements for a Communications/Data room/closet. It may be used to assist in:

- Designing new Communications/Data rooms/closets
- Assessing and refining existing Communications/Data rooms/closets to support evolving communications requirements.

A. Design Guidelines

The suggested building practices put forth in this section are recommendations and are subject to field conditions and budget constraints. Local building and electrical codes, practices and requirements may supersede the guidelines presented in this section.

1. Sizing of Communications/Data rooms/closets
- The Communications/Data room/closet must have enough space to support required communications systems, including projected growth.
- The existing system is likely to be replaced in the future
- A new system may, require more (or less) space
- The existing system and a new system may need to coexist during a cut-over

2. Location of Communications/Data rooms/closets
- Communications/Data rooms/closets should be situated so as to minimize the length and the quantity of cable runs needed for the distribution systems.
- The maximum horizontal distribution cable distance must be less than 90 meters (295 ft.), independent of media type. This distance represents the cable length from the mechanical termination of the media in the Communications/Data room/closet to the outlet in the work area. This is known as the permanent link.
- Vertical (backbone) distribution system distance limitations vary and are dependent upon media, topology, and facility issues.

3. Unacceptable locations for Communications/Data rooms/closets:
- Anywhere water vapor exists, such as boiler rooms, washrooms, or janitor's closets.
- Spaces with corrosives, explosives, and combustibles, including acid, ammonia, chlorine, oxygen, and petroleum vapors.
- Spaces containing steam pipes, drains, or clean-outs.
- Areas with high traffic volumes (for security reasons, as well as to minimize the risk of inadvertent damage) unless separately enclosed.
- Areas of high electromagnetic interference (EMI) or radio frequency interference (RFI). Both adversely affect system performance and reliability.

B. General Room Requirements

1. Electrical

- All active Communications, Data and Video systems have specific electrical power requirements. Plan electrical service to ensure smooth installation, reliable service, and compliance with manufacturers' warranties. Be sure to consider equipment manufacturer's specifications, National Electric Code (NEC) requirements, State and local codes, ordinances, and requirements.

- Electrical devices capable of causing line transients, such as fans, pencil sharpeners, radios, calculators, and lights, must be separated electrically from the Communications equipment. To

accomplish this, all Communications and Data equipment requires separate electrically isolated ground circuits and/or building grounding. The outlets on these circuits should be labeled and/or color coded. Frequently, orange-colored wall outlets are used to identify power sources used for computing and communications equipment. Utility outlets are also needed in the Communications/Data room/closet for tools, test sets, and other equipment.

- Each Communications/Data room/closet shall have one 110V, 15 Amp electrical convenience outlet and one 110V, 20 Amp dedicated-circuit isolated-ground electrical outlet for the electronic equipment. This is a minimum requirement based on the typical current draw of the networking equipment to be placed. The ground for the equipment outlet should be an isolated ground where possible to avoid line transients. The 110V 20 Amp dedicated circuit isolated ground electrical outlet(s) should be mounted in convenient location to facilitate the use of the shortest equipment power cords. The recommended location is at the top of the rack or on the ladder tray.

- All electrical isolated ground outlets serving Communications and Data equipment must be attached to non-switched circuits to prevent inadvertent equipment shutdown. It is also recommended that they be on a UPS and/or generator if available.

2. Grounding

- Most Communications and Data equipment requires bounding and grounding of equipment cabinets. Do not use plumbing or conduit (EMT) fixtures as a ground source. Grounding shall meet the NEC and EIA/TIA requirements and practices except where other authorities or codes impose more stringent requirements or practices. (Refer to NEC Chapter 2 article 250 and Chapter 8 Communications Systems, TIA/EIA Standard J-STD-607-D and Motorola R56 Standards and Guideline for Communication site).

- In addition to protecting personnel and equipment from hazardous voltages, the grounding system may reduce the effect of electromagnetic interference (EMI) throughout the structured cable plant. Improper grounding can result in induced currents that disrupt Communications circuits.

- Ensure that the installation conforms with applicable regulations and practices

- Ensure that each Communications/Data room/closet has an appropriate ground buss bar

- Ensure that grounding is available for cross-connect frames, patch panel racks, Telephone and Data equipment, as well as testing and maintenance equipment

3. Space

- A distance of three feet is the preferred clearance from the front, back, and side of a relay rack.

- If there are space constraints, it is acceptable to provide a minimum of two feet of clearance on one rack side for access and a minimum of two feet of front and back clearance for cross-connect fields, patch panels, etc. If possible, locate sleeves, cores, slots, and/or conduits together in one area to maximize usable wall space.

4. Rooms/Closets Sizing

- Determine the number of relay racks required for the termination of patch panels and electronic equipment. Assume that free-standing relay racks will be installed and provide three feet of space on all sides of each.
- Determine the amount of wall space that will be required for the installation of termination equipment. A minimum of four feet should be used as a criterion.
- Determine if the plywood backboard will be furred-out. This equals approximately 4" of space taken from the room.
- Take into account the door swing if the door opens into the room. Ideally the door should open out from the room.
- Determine how much space any sleeves, conduits, or other equipment require.
- Determine the size of the room by constructing a diagram, to sale, of all of these components, taking into account all the walkways and door swings.
- If a very small number of information outlets are being installed, the minimum size a closet can be is 4' wide and 3' deep. This assumes a 4' X 8'X 3/4" plywood backboard, one wall-mounted relay rack that has a fiber optic patch panel, copper patch panels, coax patch panel, LAN hubs and ground buss bar. It is recommended to install plywood on all walls, from the floor to the ceiling.

5. Structural Walls

- Extend from the floor to the deck above (fire wall)
- Be securely fastened to the floor and the deck above
- Conform to national and local construction guidelines

6. Wall Linings

- Each Communications/Data room/closet will contain a minimum of one furred-out or flush sheet of plywood (4' X 8') mounted on the wall.
- It is recommended to install plywood floor to ceiling on all walls.
- Securely fasten the plywood to wall framing members to ensure that it can support any attached equipment.
- The plywood is to be 3/4", A/C grade, and fire-retardant.
- All plywood backboards are to be mounted smooth side out and painted white at time of installation, prior to installation of equipment onto the plywood.

7. Floor Finish

- Keep dust to a minimum in Communications/Data rooms/closets.
- Anti-static Asphalt Tile, Linoleum Tile, or Sealed Concrete is acceptable floor finishes.

8. Ceilings and Doors

- Dropped ceiling height should be at least nine feet from the finished floor to provide adequate space for equipment cabinets and suspended cable trays. Some equipment may require additional height, depending on the manufacturer's specifications. Avoid installing false ceilings in small closets.
- Overhead ceiling vents should be centrally located to maximize air distribution and maintenance access. Avoid placing overhead ceiling vents directly over suspended racks and equipment cabinets.
- All ceiling vents should have diffusers (vent manifolds) securely installed.
- Design doorways with minimum measurements of 36 inches wide. Hinge the doors to open outward.
- All Communications/Data rooms/closets should have door locks and a minimum number of windows, if any. Closets should be kept locked. Provide keys to select personnel who are on-site continuously.

9. Lighting

- Within ceilings, position light fixtures at least eight feet above the finished floor.
- Indirect (reflected) lighting is not recommended.
- If possible, minimize heat and glare by using fluorescent light fixtures with protective covers instead of incandescent fixtures.
- Do not place light fixtures where the light may be blocked or filtered.
- Typically, light fixtures should not be directly above or within 12 inches of cabling, equipment cabinets, termination frames or other free-standing equipment.
- Install light fixtures on power circuits separate from those used for communications equipment.

10. Communication/Data Room/Closet Environment

- Manufacturers of most hardware recommend a room environment consisting of a temperature between 72–75° Fahrenheit and a 45–50% humidity level.
- It is recommended that temperature swings do not exceed 10° and humidity remain within a ±5% range.

C. MDF Requirements

An MDF Room is a specialized communications closet that may house major communications systems, such as a communications processor, switch and routing equipment. The MDF Room is generally considered to be distinct from an IDF Room because of the complexity of the equipment it contains.

A typical Main Distribution Frame (MDF) Room is composed of a wall-mounted plywood backboard and relay racks designed for mounting termination equipment and electronics (see Figure 3). Most

MDFs within the building cabling system also serve as an IDF. This is accomplished by providing separate relay racks for each and delineating the wall-mounted frame's 110 blocks for Station cabling (see Figure 4 and Figure 5).

FIGURE 3

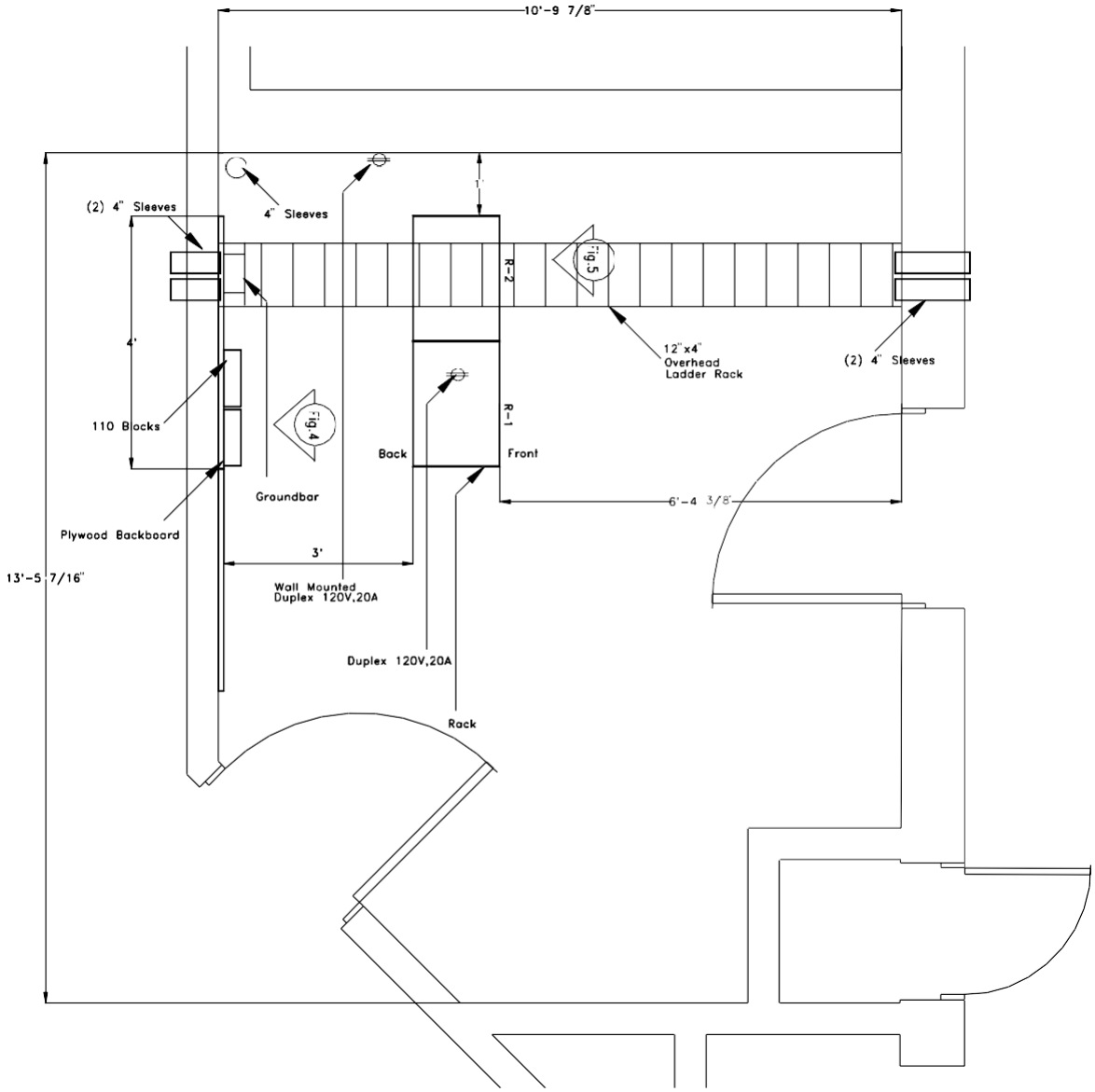

Main Distribution Frame Room Layout
NOT TO SCALE

FIGURE 4

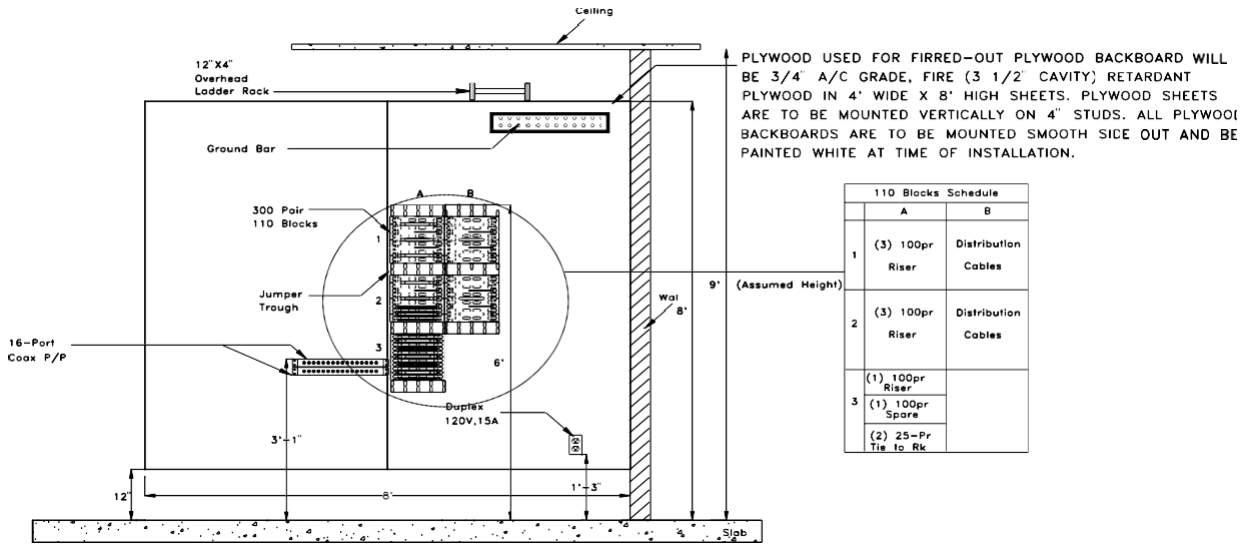

Main Distribution Frame Voice Elevation
NOT TO SCALE

FIGURE 5

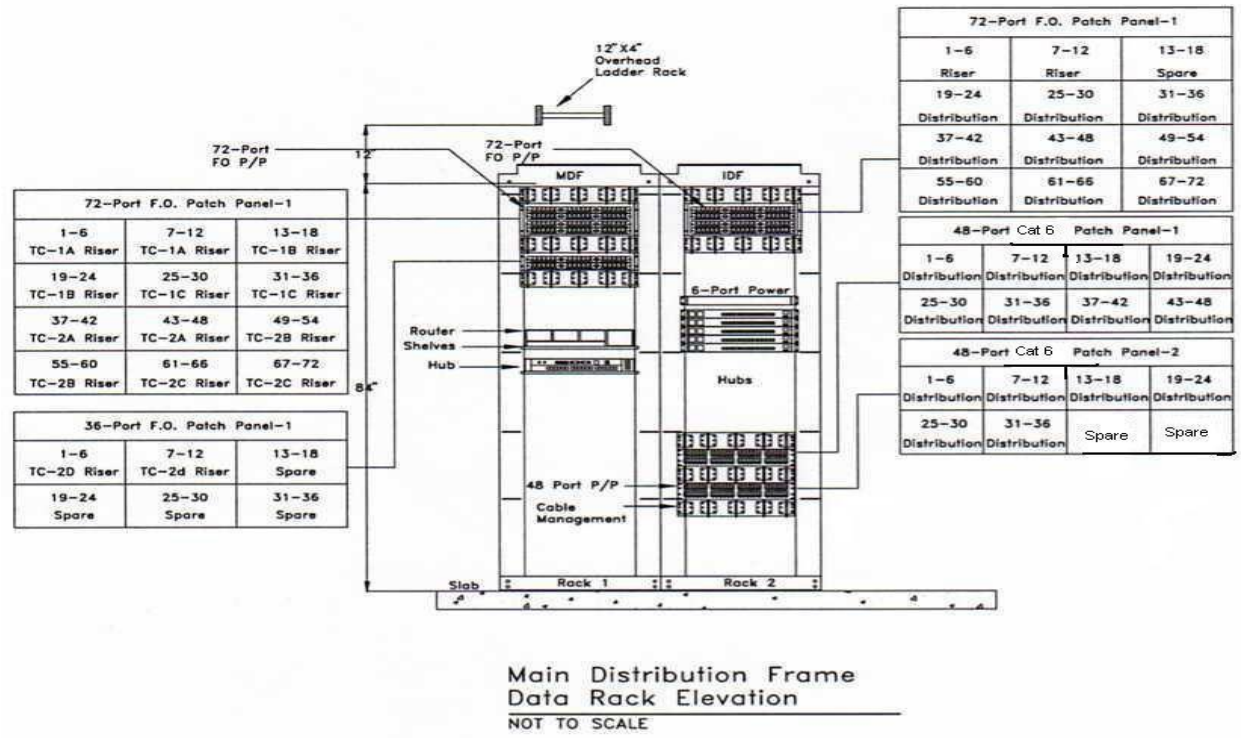

1. **MDF/IDF Room Equipment Enclosures**
   - Any MDF/IDF Rooms located in rooms that are shared with space used for any other purpose should have wire mesh cages or sheetrock walls around the Communications equipment, or the equipment should be installed in a lockable cabinet.

2. **Environment**
   - Environmental control equipment must function properly at all times. If the building system cannot ensure continuous operation on weekends and holidays, provision of stand-alone control units for the MDF/room and IDF room/closet is necessary.

   - Within the MDF room and IDF room/closet, temperature should not vary by more than 5°F, and humidity must not vary by more than 10%. Measure temperature and humidity five feet above the finished floor in the center of the communications room/closet.

3. **Local Exchange Carrier (LEC)**
   - Placement of Communications equipment may be influenced by vendors and service providers. For instance, the LEC (local phone company) may decide to terminate the Central Office (CO) service directly into the equipment space provided or request termination space other than that offered by the customer. If they request termination at a point other than that requested by the customer, the LEC should provide reasonable explanation.

   - The LEC, CATV, and most service providers will require a conduit entrance in to the building to provide their service. The minimum requirements are two (2) four- inch conduits for the LEC and one (1) four-inch conduit for each other service provider, unless they specify otherwise in writing.

- It is critical that the high speed Data line, TLS – Canoga Perkins and Fiber Optics be located in the MDF room. This will ensure security and simplify troubleshooting.
- The LEC may also need space for distribution systems terminations (either horizontal or vertical) and patch cable terminations.

4. Other Equipment Vendors

- As with the local phone company (LEC), it is vital to consult with all Communications equipment manufacturers for their specific space and operational requirements, such as the telephone system and Data LAN/WAN equipment provider.

5. Relay Racks

- Each MDF will contain a minimum of one 19"W X 7'H Relay Rack onto which the fiber optic/copper patch panels and Data electronics are mounted.
- The relay racks should have a minimum of 42 rack units of mounting space on standard 19" wide rails.
- In some cases the relay racks are wall-mounted and in others they are free-standing two- or four-post racks. It must be determined which type of rack is required, based on field conditions, equipment manufacturer's requirements, and space allocated.
- All racks are to be grounded and bolted to each other as well as to the slab or wall.
- The rack should have vertical and horizontal cable management to accommodate routing of patch cords.
- There should be a minimum distance of 48" to be maintained from three sides of the rack.
- The relay rack specifications and associated components should meet the requirements of the equipment that will be installed in it.
- It should be at a minimum 84" tall with 6" rails, with 19" equipment mounting space and vertical and horizontal wire management.
- Manufactured by Hubbell of Eaton/B-Line, Panduit or approved equivalent

6. Wall-mounted Relay Racks

- The rack is to be securely fastened to the wall behind it and attached to the ladder rack above.
- The rack should be sized to accommodate the equipment to be installed in it, with vertical and horizontal jumper management.
- Manufactured by Hubbell of Eaton/B-Line, Panduit or approved equivalent

7. Communications Cabinets

- All communications cabinets are to be grounded to the grounding and bounding system and bolted to each other and to the slab.
- Each communications cabinet is to be installed with its side to an adjacent wall. Three feet of clearance around the cabinet is recommended and the cabinets must have front and rear

access.

8. Data Equipment Cabinets

- Data equipment cabinets should conform to the State Data Center Standard as follows:

Cabinet size	30”Wx44.30’Dx79.’H
Rack units	42 rack units for equipment mounting
Mounting rails	two pair 19" adjustable depth universal mounting
Mesh steel doors	single front and split rear with locking handles
Vertical cable management	trough, rings or VeLCro tie downs or combination of, mountable left or right side
PDU mounting	space to mount two horizontal PDU closest to equipment mountable top or bottom, together or separate
PDU Metering	Managed or Metered PDU’s to display Amperage, Voltage
Side panels	removable, solid, both sides
Top	solid with cabling access opening capabilities
Bottom if required	solid with cabling access opening capabilities

- Cabinet should have grounding, bounding and anti-tip capabilities that can be added when required.
- Approved cabinet Manufacturer: Eaton Wrightline RS Series or approved equal

9. Cable Trays

- Between the relay rack and the wall-mounted frame, a 12” cable tray (center-rail systems are not permitted), with a 4" load depth and 6" rung spacing is to be installed suspended from a ceiling support structure, mounted to the relay rack and the wall.
- Do not attach any cable tray to a suspended ceiling grid.
- An open wire basket cable tray system is acceptable for cable support.
- Approved manufacturer: Cooper B-Line part # FT4X12X10 or approved equal

10. MDF Room Electrical Requirements

- Each room shall have a minimum of one duplex dedicated 20 Amp isolated ground circuit and one shared 20 Amp circuit.
- Larger equipment loads may require additional circuits.

D. IDF Room Requirements

Each IDF Rooms within a building supports all connections in single, contiguous area (zones). Cross-zone wiring is not to be installed from user workstations. Connections between zones are made through backbone wiring systems, which link the IDF Rooms to the MDF. A typical Intermediate Distribution Frame (IDF) Room is composed of a wall-mounted plywood backboard and relay racks designed for mounting termination equipment and electronics.

FIGURE 6

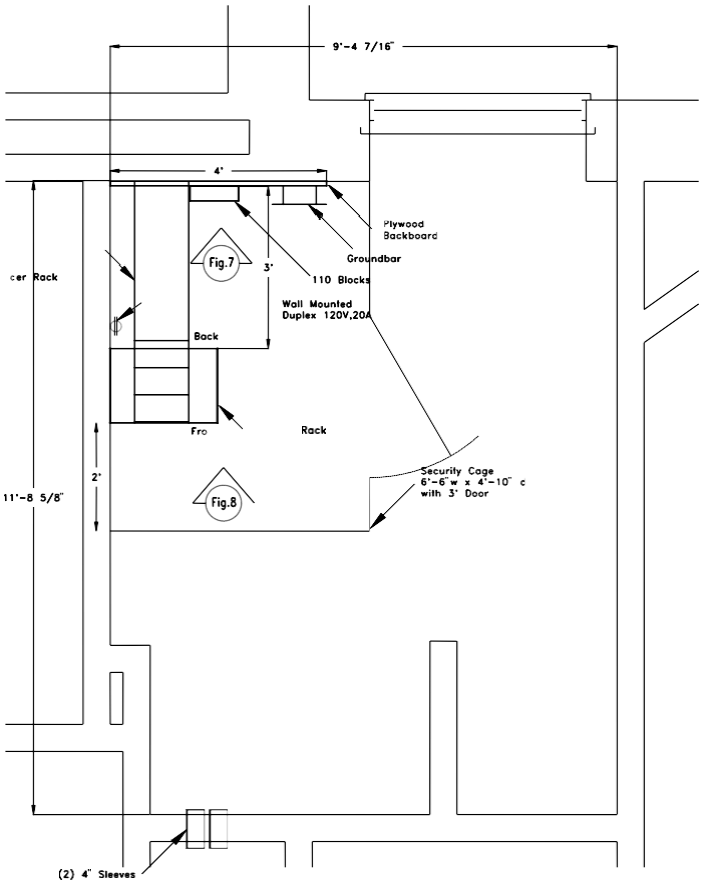

Sample IDF – TELECOMMUNICATIONS CLOSET LAYOUT
NOT TO SCALE

FIGURE 7

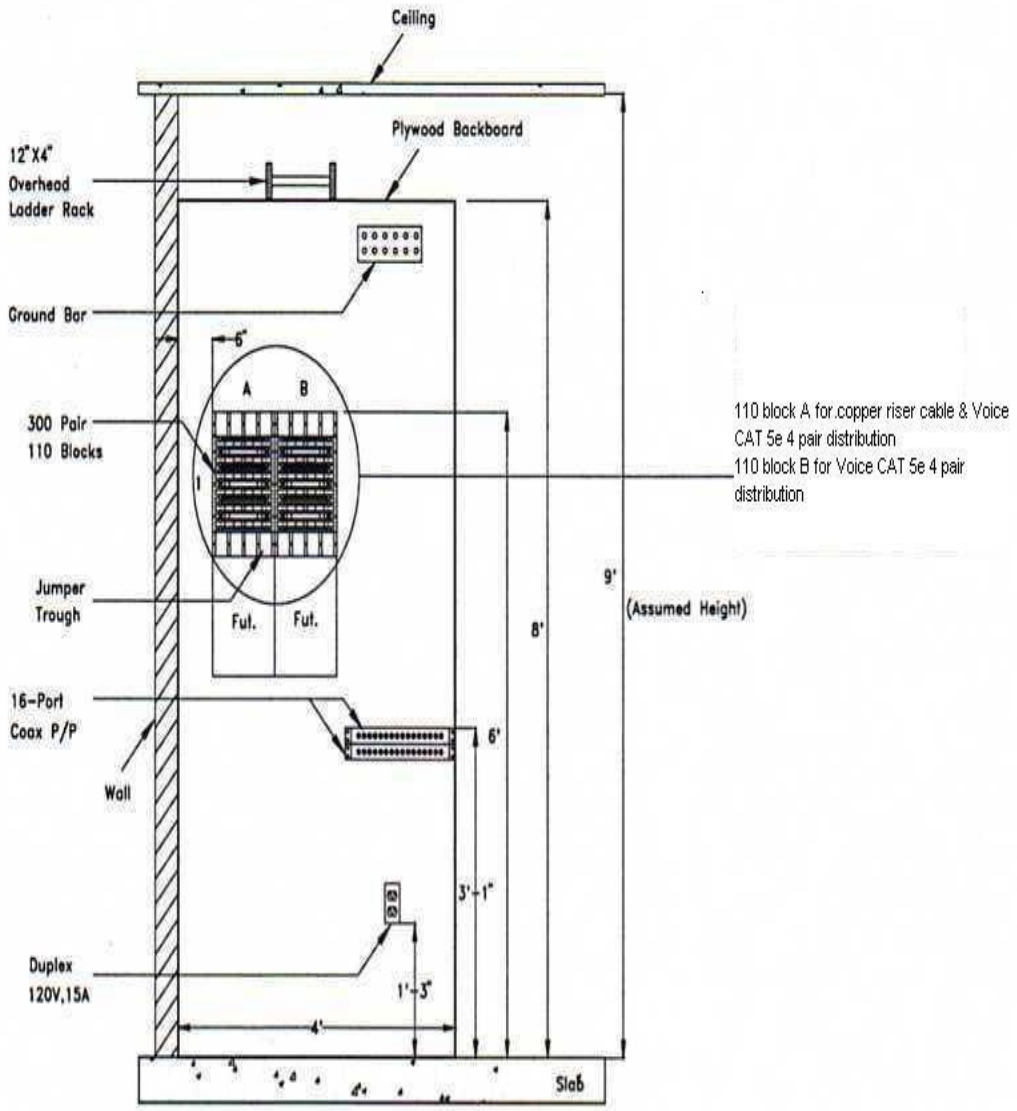

Sample IDF –Telecommunications Closet Elevation
NOT TO SCALE

FIGURE 8

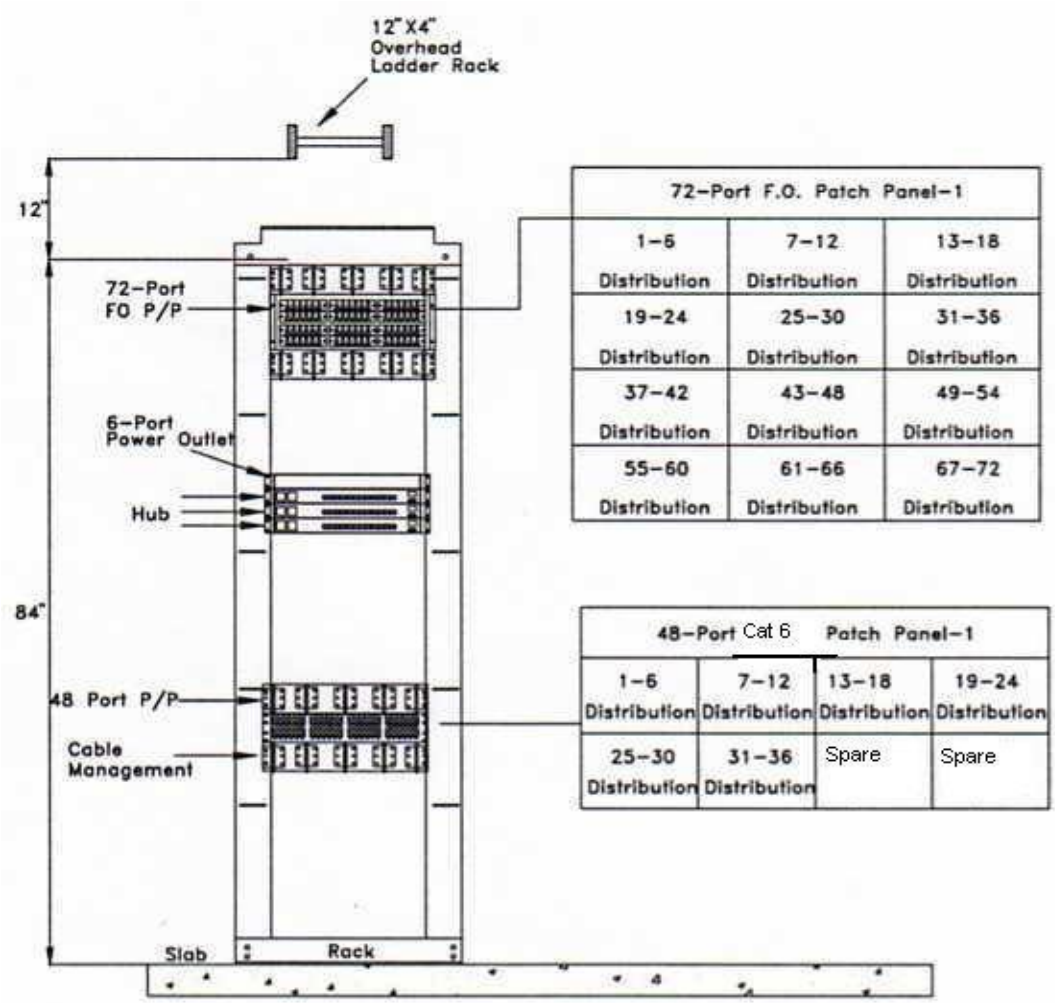

Sample IDF –Telecommunications Closet
Data Rack Elevation

NOT TO SCALE

1. **Number of IDF Communications/Data rooms/closets within a building**
   - Each floor should have at least one IDF Communications/Data room/closet.
   - Wiring workstations to IDF Communications/Data rooms/closets on different floors is not a preferred practice but can be done if no alternative exists.
   - If possible, IDF Telecommunication Closets should be positioned toward the center of the

building (usually the core area) and stacked vertically, when possible, in multi-story buildings.

2. Plywood Backboard

- Each IDF Room will contain a minimum of one 4' X 8' sheet of plywood flush- mounted on the wall.
- Securely fasten the plywood to wall-framing members to ensure that it can support attached equipment.
- The plywood is to be 3/4", A/C grade and fire retardant.
- All plywood backboards are to be mounted smooth side out and painted with white fire retardant paint at time of installation and prior to installation of equipment onto the plywood.

3. IDF Room Equipment Enclosures

- Any IDF Rooms located in rooms that are share space used for any other purpose should have wire mesh cages or sheetrock walls around the Communications equipment.

4. Relay Racks

- Each MDF will contain a minimum of one 19"W X 7'H Relay Rack onto which the fiber optic/copper patch panels and Data electronics are mounted.
- The relay racks should have a minimum of 42 rack units of mounting space on standard 19" wide rails.
- In some cases the relay racks are wall-mounted and in others they are free-standing two- or four-post racks. It must be determined which type of rack is required, based on field conditions, equipment manufacturer's requirements, and space allocated.
- All racks are to be grounded and bolted to each other as well as to the slab or wall.
- The rack should have vertical and horizontal cable management to accommodate routing of patch cords.
- The relay rack specifications and associated components should meet the requirements of the equipment that will be installed in it.
- It should be at a minimum 84" tall with 6" rails, with 19" equipment mounting space and vertical and horizontal wire management.
- Manufactured by Hubbell of Eaton/B-Line, Panduit or approved equivalent

5. Wall-Mounted Relay Racks

- The rack is to be securely fastened to the wall behind the rack and attached to the ladder rack above.
- The rack should be sized to accommodate the equipment to be installed in it, with vertical and horizontal jumper management.
- Manufactured by Hubbell of Eaton/B-Line, Panduit or approved equivalent

6. Communications Cabinets

- All communications cabinets are to be grounded to the grounding and bounding system, bolted to each other and to the slab.
- Each communications cabinet is to be installed with its side to an adjacent wall.
- Three feet of clearance around the cabinet is recommended, and the cabinets must have front and rear access.

7. Cable Trays

- Between the relay rack and the wall-mounted frame, a 12” cable tray (no center rail systems), with a 4" load depth and 6" rung spacing is to be installed suspended from a ceiling support structure, mounted to the relay rack and the wall.
- Do not attach cable trays to the suspended ceiling grid.
- An open wire basket cable tray system is acceptable for cable support.
- Manufactured by Hubbell of Eaton/B-Line, Panduit or approved equivalent

8. IDF Room Electrical Requirements

- Each Communications/Data room/closet shall have one 110V, 15 Amp electrical convenience outlet and one 110V, 20 Amp dedicated–circuit, isolated-ground electrical outlet for the electronic equipment.
- This is a minimum requirement based on the typical current draw of the networking equipment to be placed.
- The ground for the equipment outlet should be isolated where possible to avoid line transients.
- The 110V 20 Amp dedicated-circuit, isolated-ground electrical outlets should be mounted in convenient location to facilitate the use of the shortest equipment power cords.
- The recommended location is at the top of the rack or on the ladder tray.
- All electrical isolated ground outlets serving Communications and Data equipment must be attached to non-switched circuits to prevent inadvertent equipment shutdown.
- It is also recommended that they be on a UPS and/or generator if available.

PART 10 MDF & IDF PRODUCT SPECIFICATIONS

A. Category 6 Patch Panels

In new construction projects, the default cabling infrastructure shall be Category 6 unless specified otherwise.

1. Category 6 Patch Panel Requirements

- Category 6 patch panels shall be standard 8-position, RJ-45 style, un-keyed, in 48-port configurations.
- Panel frames shall be 14-gage steel with rolled edges top and bottom for proper stiffness.
- Panel design shall incorporate plastic push-fasteners to permit hands-free positioning onto standard EIA-310-D 19" mounting rails.
- Panels shall accommodate a minimum of 24 ports for each rack mount unit (1 RMU = 1.75 in.).
- Panels shall be designed for 4-pair, 100 ohm balanced unshielded twisted pair (UTP) cable.
- Panels shall terminate 26-22 AWG solid conductors, with maximum insulation diameter of 0.050 in.
- Panels shall have attached wiring instruction labels to permit either T568A or T568B wiring configurations.
- Panels shall have individual port identification numbers on the front and rear of the panel.
- Panel adapter modules shall be 110-style termination with tin lead solder plated IDC contacts.
- Printed circuit boards shall be fully enclosed front and rear for physical protection.
- Panel contacts shall withstand a minimum of 2000 mating cycles with an FCC 8-position RJ-45 plug, without degradation of electrical or mechanical performance.
- Panel contacts shall be constructed of Beryllium copper for maximum spring force and durability.
- Contact plating shall be a minimum of 50 micro-inches of hard gold in the contact area over 50 micro-inch of nickel.
- Panel termination method shall follow the industry standard 110 IDC punch-down, using a standard 110 impact termination tool.
- Panels shall be compatible with a 4-pair multi-punch impact termination tool designed specifically for the purpose. Bending or other damage to the panel using a multi-pair punch tool shall not occur.
- IDC contact termination towers shall have tapered pair-splitting features to aid wire insertion and minimize pair un-twist.
- IDC contacts shall be Phosphor Bronze with 100 micro-inch tin lead 60/40 plating over nickel.
- Panels shall not require special cords or special installation requirements.
- Panel ports shall accept optional hinged dust covers and port identification icon buttons.
- Space above the adapter ports shall be available for additional labeling per ANSI/TIA/EIA-606-A.
- Category 6 panels shall be backward compatible with existing Category 3, 5, and 5e cabling systems for fit, form, and function.

- Panels shall accept a clip-on rear cable management support bar to provide cable strain relief.

2. Category 6 Patch Panel Performance Requirements

- All transmission performance parameters shall be independently verified by a UL or ETL third party testing organization.
- Category 6 panels shall meet or exceed Category 6 transmission requirements for connecting hardware, as specified in ANSI/TIA/EIA-568-C.2 Transmission Performance Specifications for 4-Pair 100 ohm Category 6 Cabling.
- The manufacturer shall provide Category 6 component compliance certificates from third party testing organizations upon request.
- Panels shall be UL LISTED 1863 and CSA certified.
- Panels shall support 4PPOE IEEE 802.3bt Power specification to 1.5 times the rated current limits with no degradation of performance or materials.
- Panel contacts shall withstand a minimum of 2000 mating cycles with an FCC 8-position RJ-45 plug, without degradation of electrical or mechanical performance.
- Panels shall be third party verified, error free Gigabit Ethernet performance to IEEE 802.3 standard.
- Category 6 panels shall meet the current draft 10 Gb/s performance requirements of IEEE 802.3an and TSB-155, for a maximum 55-meter channel length. Conditions of requirement No. 10 above apply.

3. Acceptable Manufacturers:

- Hubbell Premise Wiring.
  The Hubbell products listed in the table below comply with all requirements specified in this document

HUBBELL CATALOG NUMBER	Description
P6E48U	NEXTSPEED® Category 6 Patch Panel, 48-Ports
PCBLMGT	Rear Cable Management Bar

- Or approved equal of: Ortronics, Panduit, Systimax.

4. Category 6 Patch Panel Installation Requirements

- Horizontal and backbone cabling of the proper category shall be fully deployed into the TR, TE, or ER according to applicable codes and standards.
- Cable slack, service loops, bend radii, and pathway fill ratio shall comply with applicable codes and standards.
- Racks, cabinets, enclosures, and metallic cable pathways shall be bonded to an approved ground according to ANSI-J-STD-607-A.

- Cable ends for termination shall be clean and free from crush marks, cuts, or kinks left from pulling operations.
- Properly mount patch panels into the designated rack, cabinet, or bracket locations with the #12-24 screws provided.
- Terminate cables into the patch panel according to manufacturer's instructions.
- To maximize transmission performance, maintain wiring pair twists as close as possible to the point of termination.
- The length of wiring pair un-twist in each termination shall be less than 0.5 inches (13 mm).
- Horizontal or backbone cables extending from the panel terminations shall maintain a minimum bend radius of at least 4 times the cable diameter.
- Cable terminations shall have no tensile or bending strain on panel IDC contacts in each installed location.
- Panels shall be properly labeled on front and back with the cable number and port connections for each port.

B. Fiber Enclosures, Adapter Plates, Connectors

1. Fiber Adapter Enclosure Requirements

- Enclosure design shall be a modular, rack-mounted, powder coated formed cold rolled steel enclosure with a removable front cover, rear panel, top panel, and slide-out inner tray.
- Each basic unit delivered shall consist of: (1) enclosure assembly, (2) mounting brackets, (6) cable ties, (5) snap-in cable clips (4) #12-24 mounting screws, (1) adhesive grid label, (4) adhesive cable clips, (2) Velcro cable ties, (3) label holders, and (1) splice tray stud, wing nut, and spacer.
- Material shall be as follows:
  a. Enclosure, panels and tray: 16 gauge cold rolled steel (CRS)
  b. Mounting brackets: 14 gage CRS
  c. Front cover: Acrylic (Plexiglas)
- Basic dimensions of the enclosures shall be approximately 17" wide by 12" deep.
- Enclosures shall be available in heights of 3.5" (2 RMU), 5.25" (3 RMU), and 7" (4 RMU) versions.
- Finish shall be black durable powder coat on all surfaces.
- Front door shall be Lexan plastic, hinged at the bottom, with a cap-plugged hole to accept an optional lock. Front door shall also be removable in the fully open position by sliding left off the mounting pins.

- Front door shall be secured in the closed position with magnetic quick-release latches.
- Top cover shall be removable in the forward direction, without fasteners, to provide access to the connector field. Top panel shall also have knockouts for backbone cable entry.
- Rear panel shall be removable without fasteners.
- Enclosure shall be equipped with panel-mounting brackets assembled for 19" rack mounting, compliant to ANSI/EIA-310-D.
- Panel mounting brackets shall be configurable to either 19" or 23" racks.
- Enclosure chassis shall have two mounting bracket locations for either flush mount or center mount on the rack.
- Rear of enclosure shall have two knockouts, top and bottom, for backbone cable entry and internal routing.
- Front of enclosure chassis shall have side cutouts for patch cord entry into, and exit from the enclosure.
- Inner tray shall slide out in the forward direction by releasing the lever-action quick-release latches. Tabs in the chassis shall engage with slots in the inner tray in the outward position to prevent tray from falling out.
- Inner tray shall have rear-located knockouts to match rear chassis knockouts.
- Inner tray panel mounting posts shall accept modular adapter panels, in high- or low-density versions. Adapter panels shall be available in singlemode.
- Splice tray mounting boss shall also accept a stud for mounting blown fiber adapter brackets.
- Inner tray shall have clips for cable ties, and holes to accept snap-in cable clips, front and rear, for complete cable management of patch cords and distribution cable strands.
- Inner tray shall have rear cable tie-down features to accept various diameter backbone cables entering the enclosure.

2. Fiber Adapter Panels Requirements

- Fiber adapter panels shall be a modular, quick-fastening steel plate, powder coated to match the enclosure finish.
- Fiber adapter panels shall have pre-installed LC fiber adapters, available in low- or high-density multi-mode or single-mode applications.
- Each individually bagged unit delivered shall consist of: (1) fully assembled adapter panel, with push-pull fasteners pre-installed.
- Adapter panels shall be constructed of 16 gauge cold rolled steel.
- Finish shall be black durable powder coat on all surfaces.

- Basic dimensions of the FSP panels shall be 5.10" length by 1.10" wide.
- Panels shall have two pre-installed, push-pull type quick-release fasteners for quick snap-in installation. Push-pull fasteners shall have an industry standard center distance of 4.65".
- Panels shall be suitable for mounting either vertically or horizontally.
- Panels shall be available in with LC adapters with precision ceramic alignment sleeves.
- All fiber adapters installed in FSP panels shall have dust caps installed.
- Panels shall be available in low-density and high-density adapter patterns.

3. Fiber Connector Requirements

- Please note OM4 minimum standard

    i. Internal Building Installation

        1. Each IDF will connect back to the MDF with 12 strands of OM4 SM fiber.

    ii. External Building/Campus Installation

        1. Buildings less than 1640ft/500m shall use a mix of OM4/Single Mode fiber.
        2. Installation distances GREATER than 1640ft/500m require use of Single Mode fiber exclusively.

- Connector basic design shall be a factory pre-polished LC optical fiber connector with a zirconium ceramic ferrule. Integral with the connector body is a wedge-activated fiber clamping mechanism to secure the inserted fiber into a mechanical splice with the factory installed cleaved fiber stub. Index-matching gel is supplied factory-injected into the cleaved fiber stub splice to optimize transmission performance. Connector attachment is achieved without tools, by inserting a field-cleaved optical fiber and then extracting the disposable clamp wedges from the connector body.
- Each basic connector unit delivered shall consist of: (1) connector body with disposable clamp wedge, (1) strain relief boot, and (1) plastic dust cap.
- Connector termination method shall utilize an industry standard multi-layer strip tool and bare fiber cleave tool as the only field tools required.
- LC connectors shall have features to enable field verification using a Visual Fault Locator (VFL) during termination.
- Connector materials shall be designed with thermal stability to comply with environmental requirements of ANSI/TIA/EIA-568-B.3 and TeLCordia GR-1081-CORE.
- Singlemode pre-polished fiber connector materials shall be as follows:

    a. Ferrule: zirconium ceramic

    b. LC inner body: thermally stable injection molded thermoplastic

c. Dust Cap: nylon or PVC

d. Strain relief boot: UL94-V0 molded PVC

- Pre-polished LC connectors shall require no field polishing.
- colors for specific applications, as designated below:
- Pre-polished OM4 LC connectors shall require no adhesives for termination.
- LC connector internal fiber clamping mechanism shall firmly secure both the inserted glass fiber and the 900 micron buffer layer of the inserted fiber for maximum strain relief.
- All standard mating and interface dimensions for LC connectors shall comply with ANSI/TIA/EIA-604-10 (FOCIS 10).
- Ferrule outside diameter for LC singlemode connectors shall be 1.2483mm to 1.2497mm.
- LC ferrule tip shall have a PC spherical radius of approximately 7.0 mm radius for singlemode versions.
- Delivered connectors shall be individually bagged with the dust cap installed to protect from contamination.
- Delivered connectors shall have the disposable clamp activation wedge element pre-installed onto the connector body.
- Connector design and termination technique shall be independent of cable type or manufacturer, and shall be compatible for either 900 micron buffer or 250 micron buffer distribution cables.
- LC connector strain relief boot shall be a TeLCordia style slotted design for maximum flexural strain relief.
- Strain relief boot shall be yellow for singlemode.
- LC connectors shall be available individually bagged in packs of 12.

- Pre-polished LC fiber connectors, when properly installed onto qualified cable, shall meet the 10 Gb/s Ethernet performance requirements of IEEE802.3.
- Pre-polished LC fiber connectors, properly installed onto qualified cable, shall exceed the mechanical and environmental performance requirements of ANSI/TIA/EIA-568-C.3, Annex 'A'.
- Pre-polished LC fiber connectors, properly installed onto qualified cable, shall exceed the mechanical and environmental performance requirements of TeLCordia GR-1081-CORE.
- Qualification test data shall be available from the manufacturer upon request.

4. Acceptable Manufacturers:

- Hubbell Premise Wiring.
  The Hubbell products listed in the table below comply with all requirements specified in this document

HUBBELL CATALOG NUMBER	Description
FCR2U6SP	Fiber Enclosure - 2U Rack Mount Fiber Enclosure, Accepts 6 Adapter Panels
FCR2U9SP	Fiber Enclosure - 2U Rack Mount Fiber Enclosure, Accepts 9 Adapter Panels
FCR3U12SP	Fiber Enclosure - 3U Rack Mount Fiber Enclosure, Accepts 12 Adapter Panels
FCR4U15SP	Fiber Enclosure - 4U Rack Mount Fiber Enclosure, Accepts 15 Adapter Panels
FSPLCDM6AQ	Fiber Adapter Panel - 6 LC Duplex, Aqua for MM – Phosphor Bronze Sleeves
FSPLCDS6	Fiber Adapter Panel - 6 LC Duplex, Blue for SM – Zirconia Ceramic Sleeves
FSPLCQS3	Fiber Adapter Panel - 6 LC Quad Blue for SM – Zirconia Ceramic Sleeves
FCLC900K50GM12	Fiber Connector - LC, MM, 50/125um, OM4 – Aqua, Box of 12
FCLC900KSM12	Fiber Connector - LC, SM, 9/125 UPC – Blue Box of 12

- Or approved equal of: Ortronics, Panduit, Systimax.

5. Fiber Installation Requirements

- For FCR-series enclosures, remove top and rear covers, and front door.
- Punch out the desired knockouts for cable entry.
- Using proper method, pull cables into cabinet through the desired knockout entry location.

- Strip the outer sheath and sub sheaths of the fiber cable to provide at least (2) meters service loop of the individual buffered fiber strands.
- Anchor the outer cable sheath into the rear channel of the inner tray using the cable ties provided. Note: in FCR-series enclosures, leave enough slack in the main cable to allow free motion of the inner tray fully outward. Remove cable entry knockouts as required.
- Installed copper and fiber cabling shall be properly strain relieved. Cable service coil, bend radius, and pathway fill ratio shall comply with applicable codes and standards.
- Use the plastic adhesive-backed clips provided to form the fiber strands into a large service coil on the surface of the inner tray. For FCR-series enclosures, be sure the inner tray has full mobility in and out, with no cable kinks or snags.
- Close inner tray and front cover, and lock the quick-release fasteners.
- Install LC fiber adapter panels by firmly using push fasteners to lock in place.
- Leave dust caps installed in the fiber adapter plates until connector termination is performed.
- Follow manufacturer's termination instructions for pre-polished connectors as specified
- Uncoil the 900-micron buffered strands of cable from the service loop and set-up for termination.
- Un-package the connector, and leave dust cap installed. Firmly press downward on the connector wedge tab to fully seat clamp wedges.
- Slide the strain relief boot onto the fiber strand before stripping.
- Using a fiber strip tool, strip buffered fiber completely to approx. 1.0" of exposed glass fiber.
- CAUTION: Do not nick or Scrape the glass fiber with the strip tool.
- Wipe the glass fiber firmly with an alcohol wipe. Always use 99.9% pure reagent grade alcohol for fiber cleaning.
- Mark the 900 micron buffer layer from the strip-off point per instructions.
- Insert the fiber into the cleave tool and cleave the fiber to the specified length from the end of the 900 micron buffer layer. Always keep the cleave tool clean.
- CAUTION: Always dispose of glass fiber waste in an approved container.
- Gently insert the cleaved fiber into the connector body. Rotate connector slightly during insertion to fully seat the fiber into the internal splice.
- Hold the seated fiber in place using slight force to form a bow in the fiber.
- Y CAUTION: Do not allow the installed fiber to slip backward.
- While holding the fiber seated, squeeze the wedge holder device to activate the clamp, and

then slip the wedge holder off the connector body. Dispose the wedge holder.

- Remove the connector dust cap and inspect the ferrule tip. A 400X microscope is recommended. View of the polished fiber should be a smooth round circle with no scratches, pits, cracks or chips. Use a lint-free wipe to clean off any contamination.
- CAUTION: Do not view ends of live fibers, with or without a microscope.
- Plug the connector into the proper adapter panel and proceed with the next connector. Leave dust cap installed if the connector is not mated.

C. Racks, Horizontal & Vertical Managers

1. Equipment Racks Requirements

- Racks shall be a structural aluminum construction, having two 6-inch deep rails.
- Racks shall feature universal side mounting hole pattern for vertical cable managers.
- Racks shall feature a weight load capacity of 1,000 lbs. when properly secured to the floor.
- Each basic rack delivered shall consist of: (2) vertical rails, (2) base angles, (1) assembly hardware kit, (2) top angles, and (20) #12-24 dog point machine screws for panel mounting.
- Racks shall be available in either for 19-inch standard rack configurations.
- Tapped holes in the front and rear vertical rails for mounting of panels shall be #12-24 thread size. Powder coat shall not interfere with thread fit.
- Standard rack heights of 8 ft (96 in)
- Racks with heights of 8 ft shall have a capacity of 51 rack mount units
- Rack base angles shall be pre-drilled for floor mounting, and for assembly to vertical rails.

2. Horizontal Managers Requirements

- Horizontal Managers shall be 19”W, 3.5”H
- Horizontal managers shall be 16ga. Cold rolled steel construction with (6) pass thru holes, and (7) Front mounted 3.5” steel rod D-Rings.
- Horizontal managers shall have hinged Aluminum front cover to conceal patch cords.

3. Vertical Managers Requirements

- Vertical cable managers shall be 14”D, 10”W
- Vertical cable managers shall feature a steel rod construction for increased air flow.

- Vertical cable managers shall feature a solid aluminum door that is designed to open left or right and swing out of way for cable management.
- Vertical cable managers shall feature power strip mounting brackets on rear of manager.
- Vertical cable manager shall accept and include (16) 3" black cable management spools.

4. Acceptable Manufacturers:

- Hubbell Premise Wiring.
  The Hubbell products listed in the table below comply with all requirements specified in this document
- Cooper B-Line.
  The Cooper B-Line products listed in the table below comply with all requirements specified in this document

HUBBELL CATALOG NUMBER	Description
HPW84RR19D	84"H, 6"D Equipment Rack
HM24C	2U Horizontal Manager w/ 3.5" Front rings and cover
VM1013	Vertical Cable Manager, 14"D, 10"W, with door & cable spools

B-Line CATALOG NUMBER	Description
SB55608419U6	84"H, 6"D Equipment Rack
SB87019S2FB	2U Horizontal Manager w/ 3.5" Front rings and cover
SB860810S084	Vertical Cable Manager, 14"D, 10"W, with door & cable spools

- Or approved equal of: Ortronics, Systimax,
-

D. Category 5e-110 Termination Blocks

1. 110 Termination Block Requirements

- Category 5e-110 wiring blocks shall be available in 50-pair, 100-pair and 300-pair capacities, with or without detachable standoff legs.
- Wiring blocks shall be available as kits that include wiring blocks, label strips, and the appropriate quantity of connecting blocks for termination to full capacity.
- Connecting blocks shall accommodate a 5-pair punch-down tool designed specifically for the purpose of Category 5e termination.
- Wiring blocks and connecting blocks shall be constructed of UL94-V0 rated high-impact flame-retardant polycarbonate blend thermoplastic.
- Wiring blocks shall accept 26-22 AWG solid or stranded conductors
- Wiring blocks shall accept conductor insulation diameters of .050 in to .070 in maximum.

- Wiring blocks and connecting blocks shall have a temperature rating of 14 °F to 140°F with up to 95% non-condensing humidity.
- Wiring blocks shall have through-openings to permit rear cable entry and direct routing to each point of termination.
- Connecting blocks shall connect to the wiring block with a locking force of 35 Lb minimum.
- Connecting blocks shall withstand a minimum of 200 re-terminations without degradation to electrical or mechanical performance.
- IDC contact termination towers on the connecting blocks shall have tapered pair-splitting features to aid wire insertion and minimize pair un-twist. IDC towers shall also have high-definition color-coding.

2. 110 Termination Block Performance Requirements

- A UL or ETL third party testing organization shall independently verify all Category 5e transmission performance parameters.
- Category 5e-110 termination blocks shall meet or exceed Category 5e transmission requirements for connecting hardware, as specified in ANSI/TIA/EIA-568-B.2.
- The manufacturer shall provide Category 5e component compliance certificates from third party testing organization upon request.
- 5e-110 termination blocks shall be UL LISTED 1863.
- 5e-110 termination blocks shall exceed IEEE 802.3 DTE Power specification to 4 times the rated current limits with no degradation of performance or materials.
- 5e-110 termination blocks shall be third party verified, error free Gigabit Ethernet performance to IEEE 802.3 standard.
- 5e-110 termination blocks shall meet or exceed the 4-connector channel performance requirements of Category 5e, per the ANSI/TIA/EIA-568-B.2.

3. Acceptable Manufacturers:

- Hubbell Premise Wiring.
  The Hubbell products listed in the table below comply with all requirements specified in this document

HUBBELL CATALOG NUMBER	DeLCription
110BLK50FTK5	110 Field Termination Kit, 5e-110/50-pair with 5-Pair Conn. Blocks
110BLK100FTK5	110 Field Termination Kit, 5e-110/100-pair with 5-Pair Conn. Blocks
110BLK300FTK5	110 Field Termination Kit, 5e-110/300-pair with 5-Pair Conn. Blocks

- Or approved equal of: Ortronics, Panduit, Systimax, Leviton

4. 110 Installation Requirements

- Follow manufacturer's instructions.
- Mount 5e-110 wiring blocks in the desired location.
- Route cables through the openings in the wiring block base.
- Terminate UTP cables to the 5e-110 block according to manufacturer's instructions, using the connecting blocks and proper termination tool.
- To maximize transmission performance, maintain wiring pair twists as close as possible to the point of termination.
- The length of wiring pair un-twist in each termination shall be less than 0.5 inches (13 mm).
- Cables extending from the block terminations shall maintain a minimum bend radius of at least 4 times the cable diameter.
- Cable terminations shall have no tensile or bending strain on IDC contacts after termination. Note: Use the appropriate cable management hardware to relieve cable strain and control bend radius.

PART 11 INFORMATION OUTLETS – DATA & VOICE

A work area has at least one standard Information Outlet consisting of two Data RJ45 jacks. All of the RJ45 jacks shall be Category 6 unless otherwise specified are wired according to the **568B** standard.

- DATA & VOICE Cabling Requirement LCenarios
  - DATA PC & VOIP Telephony INFORMATION OUTLET
    - 2x DATA RJ45 CAT 6 Jacks per Information Outlet
    - No Traditional Voice Wiring Required
  - DATA PC & TDM/Digital or Analog Phones/PBX
    - 2x DATA RJ45 CAT 6 Jacks per Information Outlet

A. Information Outlet Locations

1. The location of the information outlets is dependent on the environment in which the outlets will be installed. An office environment certainly is different than a laboratory, training room, or manufacturing area. If the outlets are to be wall- mounted, the bottom of the outlet is to be located 15" above of the finished floor under normal conditions. However, there are many exceptions to this rule. If there is existing equipment that does not allow for this, such as a credenza or countertop, the outlet must be placed at a height appropriate to the situation.
2. Locate the outlet where it is closest to the equipment and people it will serve. Keep in mind that the cord from the outlet to the device can be a trip hazard or may span across doors. In an office

environment, each desk or workstation should have an information outlet. If a particular area has a series of fax machines or modems, then additional outlets should be installed. The number of jacks in an outlet is standard, so to maintain the standard, additional information outlets of the same configuration should be installed; do not install non-standard outlets.

3. Computer laboratories or training rooms require a large amount of connectivity in odd locations. Power poles are one solution as is the use of surface-mounted raceway or floor-mounted boxes. Each situation is different and must be considered individually. Again, standards are to be maintained in outlet configurations.

4. When locating an outlet, consideration should be given to the route the cable must take to the information outlet. If the outlet is to be installed on a masonry wall and surface-mount raceway is used for cable routing, the location of the outlet may be more dependent on the path available down or across the wall than where the equipment is located. Each location must be looked at individually to determine if the route to the desired outlet location is possible.

5. Wall-mounted outlets should not be located on heating units, equipment or ductwork. They are always to be located on either a gypsum, sheetrock, or masonry wall.

6. A description of the information outlet configurations follows:

   - Standard Office Information Outlets consist of: as detailed on the drawings attached to the contract, the contractor will install and terminate (3) four-pair, one UTP Category 6+ or 6a for Data cables onto individual RJ45 female jacks.

   - Computer Laboratory or Training Room Information Outlets: as indicated on the attached drawings, the contractor will install and terminate the designated series of four-pair UTP Category 6+ or 6a cables onto individual RJ45 jacks. The number of cables and jacks vary from two to eight, depending upon the furniture configuration and number of PCs to be served.

B. Category 6 Jacks

In new construction projects, the default cabling infrastructure shall be Category 6 unless specified otherwise.

1. Category 6 Jack Requirements

- Jacks shall be standard 8-position, RJ-45 style, un-keyed, FCC compliant.

- Jacks shall be designed for 4-pair, 100 ohm balanced unshielded twisted pair (UTP) cable.

- Each jack shall be single unit construction, with snap – fit to industry standard keystone opening (.760” x .580”).

- Jack housings shall fully encase and protect printed circuit boards and IDC fields.

- Modular jack contacts shall accept a minimum of 2000 mating cycles without degradation of electrical or mechanical performance.

- Jack contacts shall be constructed of Beryllium copper for maximum spring force and durability.

- Contact plating shall be a minimum of 50 micro-inches of hard gold in the contact area over 50 micro-inch of nickel.

- Jack termination method shall follow the industry standard 110 IDC punch-down

- Jacks shall be compatible with a 4-pair single punch impact tool designed specifically for the purpose.
- IDC contact termination towers shall have tapered pair-splitting features to aid wire insertion and minimize pair un-twist.
- Jacks shall terminate 26-22 AWG solid or stranded conductors.
- Jacks shall terminate insulated conductors with outside diameters up to .050".
- Jacks shall not require special cords, specialty tools or special installation requirements.
- Jacks shall include a translucent stuffer cap for wire retention and to permit visual inspection.
- Stuffer cap shall have retention snaps to assure conductor strain relief.
- Jacks shall accept FCC compliant 6 position plugs.
- Jacks shall accept optional hinged dust covers.
- Jacks shall be compatible with ANSI/TIA/EIA-606-A color code labeling.
- Jacks shall accept snap-on icons for specific identification.
- Jacks shall be available in various colors to meet specific customer applications.
- Jacks shall have attached wiring instruction labels to permit either T568A or T568B wiring configurations.
- Category 6 jacks shall be backward compatible with existing Category 3, 5, and 5e cabling systems for fit, form, and function.

2. Category 6 Jack Performance Requirements

- All transmission performance parameters shall be independently verified by a UL or ETL third party testing organization.
- Category 6 jacks shall exceed Category 6 transmission requirements for connecting hardware, as specified in ANSI/TIA/EIA-568-B.2-1, Transmission Performance Specifications for 4-Pair 100 ohm Category 6 Cabling.
- Category 6 jacks shall exceed 10 Gb/s transmission requirements for connecting hardware, under the constraints of ANSI/TIA-TSB-155 (current draft).
- The manufacturer shall provide Category 6 component compliance certificates from third party testing organization upon request.
- Jacks shall be UL LISTED 1863 and CSA certified.
- Jacks shall exceed IEEE 802.3 DTE Power specification to 4 times the rated current limits with no degradation of performance or materials.

- Jacks shall be third party verified, error free Gigabit Ethernet performance to IEEE 802.3 standard.
- Jacks shall exceed 4 Gb/s data transmission capacity within the bandwidth of 1 – 250 MHz when configured in a 4-connector channel.
- Jacks shall exceed the 4-connector channel performance requirements of Category 6, per the ANSI/TIA/EIA-568-B.2-1 standard.
- Jacks shall exceed the 4-connector Category channel performance requirements for 10 Gb/s transmission over Category 6, according to TIA/TSB-155 (current draft).
- The 4-connector channel test configuration shall utilize Category 6 patch panels and Category 6 patch cords, from the same manufacturer, with qualified Category 6 cable.

3. Acceptable Manufacturers:

- Hubbell Premise Wiring.
  The Hubbell products listed in the table below comply with all requirements specified in this document

HUBBELL CATALOG NUMBER	Description
HXJ6xx	NEXTSPEED® Category 6 Jack

xx = Jack color. Replace xx with “W” for White, “BK” for Black, “B” for Blue, “GY” for Gray, “GN” for Green, “OW” for Office White, “OR” for Orange, “R” for Red, “Y” for Yellow. Refer to project drawing for color applications.

- Or approved equal of: Ortronics, Panduit, Systimax.

4. Category 6 Jack Installation

- Horizontal cabling of the proper category shall be fully deployed from the TR or TE to each wall plate location according to applicable codes and standards.
- Cable slack, service coil, bend radii, and pathway fill ratio shall comply with applicable codes and standards.
- Metallic horizontal cable pathways shall be bonded to an approved ground according to ANSI-J-STD-607-A.
- Cable ends for termination shall be clean and free from crush marks, cuts, or kinks left from pulling operations.
- Terminate jacks according to manufacturer’s instructions.
- To maximize transmission performance, maintain wiring pair twists as close as possible to the point of termination.
- The length of wiring pair un-twist in each termination shall be less than 0.5 inches (13 mm).

- Jacks shall be properly mounted in plates, frames, or housings with stuffer cap fully installed over IDC contacts.
- Horizontal cables extending from mounted jacks shall maintain a minimum bend radius of at least 4 times the cable diameter.
- Cable terminations shall have no tensile or bending strain on IDC contacts after assembly of faceplate or housing to the wall outlet.
- Jacks shall be tested as part of the installed horizontal cabling system, with faceplates assembled complete and properly mounted.
- Each link or channel in the horizontal cabling system shall be identified and tested individually, using an industry standard level III tester with correct settings.
- Each jack shall be tested as part of the horizontal channel or link for the parameters listed below.

C. Face Plates

1. Face Plate Requirements

- Faceplates shall be constructed of high impact, UL94 V-0 rated thermoplastic.
- Faceplates shall be 2.75" W x 4.5" H (69.8 mm x 114.3 mm) for single gang and 4.5” X 4.5” (114.3 X 114.3 mm) for double gang.
- Port size in each faceplate shall be industry standard vertical keystone opening size (.760” x .580”).
- Faceplates shall accept Hubbell XJ-series UTP jacks and Snap-Fit fiber optic, audio, and video modules for multimedia applications.
- Faceplates shall provide for ANSI/TIA/EIA-606-A compliant workstation outlet labeling.
- Faceplates shall be provided with clear plastic and color-matched label field covers.
- Color-matched blank Snap-Fit modules shall be available separately to fill unused ports and openings as required.
- Two #6-32 pan head Phillips/slotted mounting screws shall be included with each single gang faceplate.
- Four #6-32 pan head Phillips/slotted mounting screws shall be included with each double gang faceplate.
- Jacks and Snap-Fit modules shall snap firmly into rear of faceplate and position flush to outer plate surface.
- Faceplates shall be compatible with standard NEMA openings and boxes.

- Faceplates shall be compatible with raceway fittings, surface mount boxes, service fittings, flush mount boxes and drywall rings.

2. Acceptable Manufacturers:

- Hubbell Premise Wiring.
  The Hubbell products listed in the table below comply with all requirements specified in this document

HUBBELL CATALOG NUMBER	Description
IFP11xx	1-Gang, 1-Port IFP Face Plate
IFP12xx	1-Gang, 2-Port IFP Face Plate
IFP13xx	1-Gang, 3-Port IFP Face Plate
IFP14xx	1-Gang, 4-Port IFP Face Plate
IFP16xx	1-Gang, 6-Port IFP Face Plate
IFP26xx	2-Gang, 6-Port IFP Face Plate
IFP29xx	2-Gang, 9-Port IFP Face Plate
IFP212xx	2-Gang, 12-Port IFP Face Plate

xx = Face Plate color. Replace xx with “W” for White, “BK” for Black, “GY” for Gray, “OW” for Office White, to project drawing for color applications.

- Or approved equal of: Ortronics, Panduit, Systimax.

PART 12 CABLE ROUTING SYSTEMS

Each cable routing system has advantages and disadvantages. Particular systems are favored for a variety of reasons, including architectural considerations, appearances, cost, local ordinances, and material concerns.

Various means of distributing cable from Communications/Data rooms/closets to the user work areas are identified in the following:

A. Ceiling Distribution System

A distribution system within an accessible area above a false ceiling. This could either be a plenum area (where there is no enclosed system for cable routing) or an overhead conduit system (which has defined areas of access and routes).

B. “J” Hooks

Where not installed in conduits, cable trays, or other supporting devices, the horizontal wiring plan is to be installed onto “J” hooks or an acceptable equivalent from the information outlet to the termination point within the IDF or MDF/IDF room. The “J” hooks are to be installed a maximum of five feet apart and fastened to the ceiling or the top of the walls near the ceiling. The cables are to be tie-wrapped to the “J” hooks, without crimping the sheath. The cable contractor is to furnish and install the “J” hooks. Cooper B-Line BCM 21, 32, and 64 are acceptable.

C. Sleeves and Conduits

1. The use of conduits and sleeves within a building is common for the transport of communications cable. Conduits and sleeves are to be sized and routes are to be planned within and between buildings in order to route the cable plant from the MDF to IDF and IDF to Information Outlet, and to accommodate any additional cabling required. The sizing of the conduits and sleeves is to be based on the number of cables, the location and environment surrounding the sleeve or conduit, and acceptable conduit fill levels, which are typically 40%. All conduits are to be installed with the appropriate sweep to maintain the required bend radius for copper and fiber optic cable. All sleeves and conduits are to be installed with bushings and suspended according to building industry standards.

2. The following are guidelines to use in determining where sleeves and conduits are to be installed but does not limit nor identify all areas or situations where sleeves and conduits will be required.

   - All masonry walls that have cables passing through them are to have sleeves installed.
   - Gymnasiums and athletic areas are to have conduits installed to house cables passing through the area.
   - Each MDF and IDF Room is to have sleeves installed to contain the large number of cables exiting the room. Conduits are to be installed in areas where cables extend from one building to another via covered or enclosed bridges and corridors.

3. Cable routing is to follow a “streets and avenues” path in corridors where possible. However, there are a number of reasons for exceptions. In some cases, the corridors do not allow cables to be run because of architectural constraints or inaccessible ceilings. Also, in order to maintain the 90-meter standard for Category 6 cabling, some cables need to be run separately and diagonally to isolated information outlets. Throughout all runs, the contractor is to maintain EIA/TIA standards regarding the proximity of communications cabling to high voltage cabling, motors, transformers, fluoreLCent lighting, ballasts, etc.

PART 13 CABLING-GENERAL

A. All cable shall meet the requirements of the NEC, except where other authorities or codes impose a more stringent requirement or practice. Codes, such as the NEC, do not normally include transmission performance requirements. This section specifies the essential media transmission characteristics. It is advisable to consult standards associated with the planned service or equipment to determine any specific media limitations.

B. Contractor is to take all necessary precautions to assure that the maximum tensile load and minimum bend radius of all cables (fiber and copper) are not exceeded. When terminating Category 5e & 6 cable, care should be taken to maintain pair twists up to the termination point and not more than 0.5" of the cable pairs shall be untwisted. It is preferred that the cable sheath is also not removed more than 0.5" from the termination point. Tie wraps are to be hand-tightened on cables and are not to crimp the sheath. Contractor is responsible for protecting all connectorized cables from damage by other contractors at the information outlet before and after installation of the outlet faceplates.

C. All riser and station cable installed is to be plenum-rated cable. The fluoropolymer resin that insulates Category 6+ plenum cables is engineered as a fire safety innovation. The NEC requires that all cable installed in plenum spaces and not encased in conduit must have certain fire resistance and low smoke producing characteristics. Not only are such cables highly resistant to fire but they also produce very little smoke.

D. All new Voice cabling will be terminated onto Category 6 RJ45 Patch Panels. The fiber optic cabling will be terminated onto fiber distribution panels with LC connectors.

E. Cables shall be terminated on the appropriate unassigned (vacant) portions of the wall-mounted Main and Intermediate Distribution Frames or Patch Panels and run as uninterrupted conductor sections to the Information Outlets. All cable terminations shall be made uniformly in sequence, commencing with termination of the first cable pair on the first connection points in the upper left-hand corner of each block.

F. Minimum separation distances between pathways and power wiring of 480 V or less are shown in Table 1, below.

Table 1 Separation of Communications Pathways from <= 480V Power Lines

	Minimum Separation Distances		
Condition	< 2 kVA	2-5 kVA	> 5 kVA
Unshielded power lines or electrical equipment in proximity to open or nonmetal pathways.	127 mm (5 in)	305 mm (12 in)	610 mm (24 in)
Unshielded power lines or electrical equipment in proximity to a grounded metal conduit pathway	64 mm (2.5 in)	152 mm (6 in)	305 mm (12 in)
Power lines enclosed in a grounded metal conduit (or equivalent- shielding) in proximity to a grounded metal conduit pathway.	76 mm (3 in)	152 mm (6 in)	

All cabling shall be at least:

- 12” from high voltage lighting and fluorescent fixtures
- 72” from transformers and motors

PART 14 HORIZONTAL CABLING - CATEGORY 6 UTP DATA

All riser and station cable installed is to be plenum-rated cable.

A. Category 6+ 100 OHM balanced UTP Cable Requirements

In new construction projects, the default cabling infrastructure shall be Category 6 unless specified otherwise.

1. Cable construction shall be four twisted pairs of 23 AWG insulated solid conductors, with a ripcord, surrounded by a tight outer jacket.
2. All 4 pairs will have a cross-hair (X) physical separator between the pairs.
3. Conductor diameters shall be 0.0224” ± .0003” solid copper.
4. Conductor insulation diameter shall be 0.039” ± .0005” fluoro copolymer.
5. Outer jacket diameter shall be 0.235” ± .008” low smoke PVC, with a nominal wall thickness of 0.015”.
6. Ripcord shall be directly underneath the outer jacket.
7. Cable shall be marked every 2 ft including
   - Cable Manufacturer
   - Cable Description

- Month and Year of manufacture.
- Job number.

8. UL, ETL, or CSA agency certification or verification markings shall be marked on the cable jacket according to the certifying agency's requirements.
9. Color coding of the pairs shall be as follows:
   - Pair 1: White/Blue; Blue
   - Pair 2: White/Orange; Orange
   - Pair 3: White/Green; Green
   - Pair 4: White/Brown; Brown
10. Cable shall be supplied in 1000 ft spools or 1000 ft Reelex boxes.

B. Category 6 100 OHM balanced UTP Cable Performance Requirements

1. All transmission performance parameters shall be independently verified by a UL or ETL third party testing organization.
2. Cable shall exceed Category 6 transmission requirements specified in ANSI/TIA/EIA-568-B.2-1, and shall be tested through 550 MHz.
3. Worst-case cable performance shall be +8.0 dB headroom over current TIA/EIA and ISO standards limits for NEXT and PSNEXT loss, and ELFEXT and PSELFEXT loss.
4. Insertion loss shall be 3.0% lower than standard Hubbell Category 6+ plenum and riser cables described in Section 27 15 13.
5. Worst case electrical performance characteristics shall be as follows:
   - Characteristic Impedance: 100 + 15 (1.0-100 MHz) 100 + 20 (101-250 MHz)
   - Maximum Conductor Resistance: 9.38 /100 Meters @ 20°C
   - Maximum Resistance Unbalance: 3%
   - Maximum Mutual Capacitance: 5.6 nF/100 Meters @ 1 kHz
   - Maximum Capacitance Unbalance: 330 pF/100 Meters
   - Maximum Delay Skew: 25 ns/100 Meters
6. The manufacturer shall provide Category 6 component compliance certificates from third party testing organization upon request.
7. Cable shall be UL and C(UL) listed.
8. Cable shall exceed IEEE 802.3af DTE Power specification to 4 times the rated current limits with no degradation of performance or materials.
9. Cable shall be third party verified, error free Gigabit Ethernet performance to IEEE 802.3ab.
10. Cable shall exceed the requirements of TIA/TSB-155: 10 Gb/s Ethernet Operation over 55 Meters Channel Length.
11. Cable shall meet or exceed the 4-connector channel performance requirements of Category 6, per the ANSI/TIA/EIA-568-B.2-1 standard.
12. The 4-connector channel test configuration shall utilize Category 6 jacks and patch panels, with Category 6 patch cords, from the same manufacturer, with pre-qualified Category 6+ cable.

B.2. Minimum Cable Performance:

13. All measurements are at 250MHz
    - Insertions Loss: 32.7dB
    - NEXT: 41.4dB
    - ACR:8.6dB
    - ELFEXT: 23dB
    - Return Loss: 17.5dB

C. Acceptable Manufacturers:

1. Hubbell Premise Wiring
   The Hubbell products listed in the table below comply with all requirements specified.

HUBBELL CATALOG NUMBER	Description
C6SPxx	NEXTSPEED Category 6 550 MHz – Plenum Spool
C6RPxx	NEXTSPEED Category 6 550 MHz – Plenum REELEX

xx = Cable color. Replace xx with "W" for White, "GY" for Gray, "B" for Blue, "Y" for Yellow. Refer to project drawing for color applications.

2. Or approved equal of: Berk-Tek, Systemax, Panduit

D. Category 6+ 100 OHM balanced UTP Cable Installation Requirements

1. Pull cable into conduits, or place into raceway or cable tray as specified. Do not exceed 25 Lb. pull force per cable. Use appropriate lubricants as required to reduce pulling friction.
2. All exposed wiring shall be installed in surface raceway.
3. All wiring above ceilings or below access floors shall be installed in cable tray or open-top cable hangers.
4. Cable slack and service loops shall be stored properly above the ceiling or under the access floor. A "figure-eight" service loop is recommended for Category 6 cabling to reduce EMI coupling.
5. Pathway fill ratio in conduit, tray, raceway, etc. shall not exceed 40% of pathway cross-sectional area.
6. Installed cable bend radius shall be greater than 4X cable diameter. Avoid kinking or twisting the cable during installation.
7. Do not over-tighten cable ties, and do not use staples or clamps to anchor cables. Velcro straps are recommended.
8. Recommended spacing of cable supports above the ceiling shall be 48".
9. Maintain the following clearances from EMI sources:
   - Power cable: 6 in.
   - Florescent lights: 12 in.
   - Transformers and electrical service enclosures: 36 in.
10. Communications cabling that must cross power cables or conduit shall cross at a 90-degree angle, and shall not make physical contact.
11. Length of each horizontal cable run from the TR to the wall outlet shall not exceed 90 meters.
12. Leave sufficient slack for 90 degree sweeps at all vertical drops.
13. Do not install cable in wet areas, or in proximity to hot water pipes or boilers.
14. Cable ends for termination shall be clean and free from crush marks, cuts, or kinks left from pulling operations.
15. Installed cable jackets shall have no abrasions with exposed conductor insulation or bare copper 'shiners". The installer is responsible to replace damaged cables.
16. Horizontal cables extending from mounted jacks or panels shall maintain a minimum bend radius of at least 4 times the cable diameter.
17. Firestop all cable penetrations through fire-rated barriers per local codes.

PART 15 VERTICAL DISTRIBUTION SYSTEMS

A. Riser Connectivity and Cable General

1. The cabling system shall use a fiber/copper riser cable system between the IDF rooms and the MDF within the building.

2. Copper Voice/Data Riser shall be 25-pair Category 3 plenum Copper Riser Cables Installed between each IDF and the MDF as indicated in the attached riser drawings. These cables are to be terminated onto the 110 termination blocks on the wall-mounted or rack-mounted frames in the IDF Rooms and MDF Room.

3. Fiber Riser shall be 12-strand single mode fiber optic cable is to be installed between each IDF and the MDF Room as indicated in the drawings. These cables are to be terminated onto fiber optic patch panels located in the relay racks in each of the IDF rooms and the MDF Room. The 12-strand single mode fiber cable is to be connectorized with LC connectors on both ends.

4. A plenum coaxial cable is to be installed from the MDF Head-End Room to the various IDF Rooms within the building. The cable is to be fastened to the wall- mounted plywood backboard in each floor's IDF and MDF Room with 15 feet of slack neatly coiled, tie wrapped, and left dead-ended.

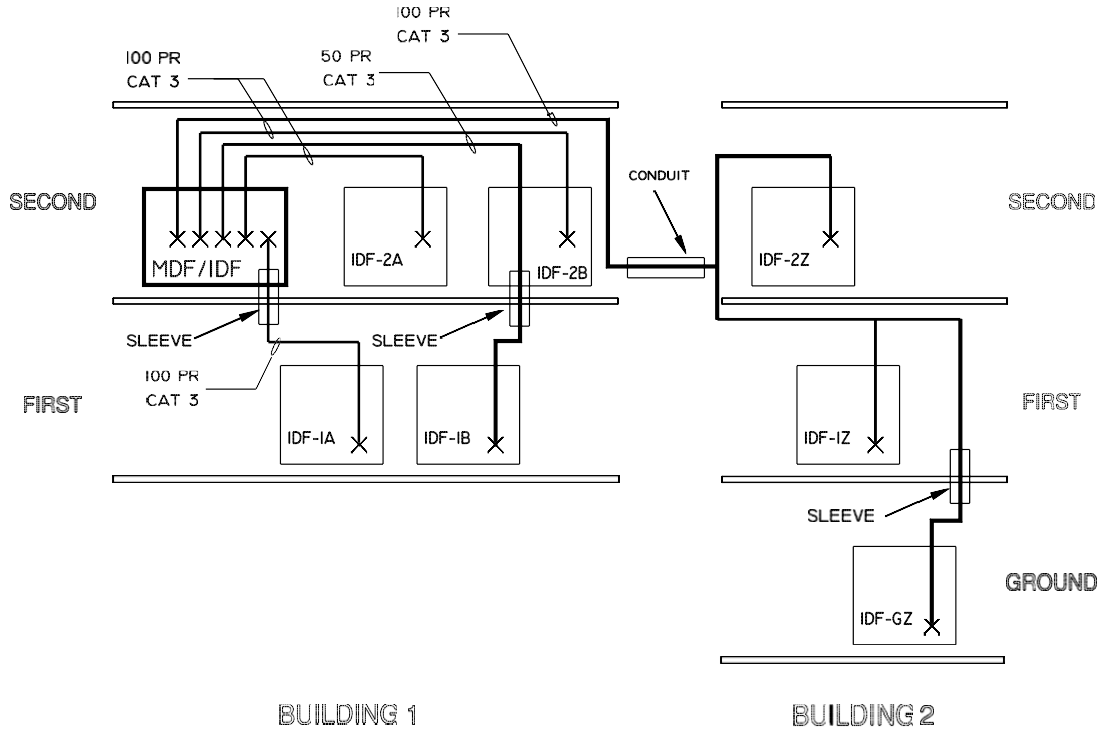

SAMPLE RISER-VOICE CABLING
SCALE: NONE

B. Fiber Backbone Distribution cable: indoor, non-armored

1. Fiber Backbone Distribution cable Requirements

- Optical Fiber Indoor Distribution Cable shall be constructed with 12 optical fibers, each coated with a 900 micron color-coded PVC tight buffer, surrounded by an aramid yarn strength member, Armored, and a single outer jacket with the appropriate flame rating.
- Fiber cables shall be a non-metallic construction, OFNP (Plenum FT-6) flame rating.
- Cable markings shall repeat every meter, and shall have at minimum the following information:
  a. Sequential length indicator marking (meters)
  b. Manufacturer's name and catalog number
  c. Lot number, traceable back to the fiber draw lot
  d. Date of Manufacture
  e. Fiber type: (OM4 and singlemode)
  f. Cable rating (OFNR, OFNP, etc.)
  g. Applicable TeLCordia, TIA, IEC, and ICEA standard references and appropriate UL/CSA agency listings
- Cable jacket color shall be yellow for Singlemode 8.3/125 micron fiber.
- Buffer position color codes shall conform to standard ICEA and TIA-598 conventions as follows:1-Blue, 2-Orange, 3-Green, 4-Brown, 5-Slate, 6-White, 7-Red, 9-Yellow, 10-Voilet, 12-Aqua.
- Optical fiber in any cable construction shall be enhanced performance, bend-insensitive type.
- Singlemode cables shall perform at minimum to the attenuation, bandwidth, and distance application parameters in the table below.

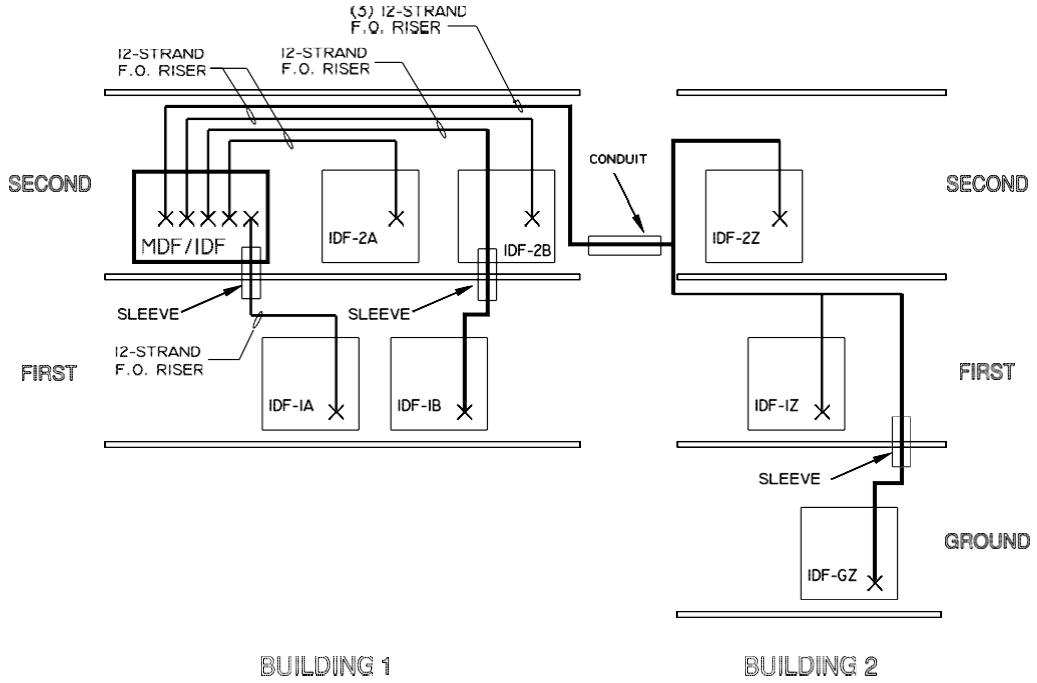

SAMPLE RISER-FIBER OPTIC CABLING
SCALE: NONE

Fiber Gigabit and 10 Gigabit Ethernet Application Chart					
Fiber Type	**Wavelength (nm)**	**Max Attenuation (dB/km)**	**Bandwidth (MHz•Km)**	**1 GbE Distance (m) @ 850/1300nm**	**10 GbE Distance (m) @ 1300nm**
SM 8.3 µm (OS2)	**1310/1550**	**0.5/0.5**	**>25000**	**5000/-**	**10,000/40,000**

- Optical fiber cables as supplied shall meet or exceed the applicable IEC 60793-1 qualification test requirements for optical, geometry, mechanical, and environmental parameters as specified, and tested in accordance with TIA/EIA-455.

2. PERFORMANCE REQUIREMENTS

- For installed fiber cables, all fiber strands shall pass insertion loss and return loss in accordance with test methods ANSI/TIA/EIA-526-14 for multimode cables.
- Installed fiber cables shall exceed all currently ratified bandwidth-distance- application performance parameters for IEEE 802.3ae (10 GbE) and for IEEE 802.3ba (40/100 GbE)
- Plenum cables shall be rated UL NFPA-262/UL910/CSA FT-6

3. Acceptable Manufacturers:

- Hubbell Premise Wiring or pre-approved equal.
  The Hubbell products listed in the table below comply with all requirements specified in this document

HUBBELL CATALOG NUMBER	Description
HFCD15012PS	Fiber Optic Cable – 12 Strand SM 8.3 µm (OS2), Plenum, Armored, yellow

- Or approved equal of: Panduit, Berk-Tek

4. Fiber Backbone Distribution cable: indoor, non-armored Installation Requirements

- Prior to cable deployment, backbone pathways (conduit, tray, raceway, wire basket, etc.) for cable routing shall be permanently installed in compliance with contract documents, and applicable codes and standards.
- Racks, cabinets or enclosures into which cables are to be routed shall be permanently installed in compliance with contract documents, and applicable codes and standards.
- Optical fiber cables shall be deployed using the proper pulling grip or apparatus attached to the exposed cable strength member. Contact the cable manufacturer regarding permissible methods for cable pulling. Never pull directly on the fiber strands of an optical fiber cable.
- Cables shall not exceed minimum bend radius limits or maximum pulling loads during or after installation. Avoid crushing or abrasion of the cable jacket during installation.
- Installed cables shall be fully supported and strain relieved from pulling on terminated connections. Apply wire ties loosely and avoid crushing or clamping cables with excessive

force.

- All non-armored fiber optic riser cables are to be installed in plenum inner-duct. Fibers in inner-duct or armored plenum riser fiber serving as riser cables are to be installed according to the attached riser drawing. Contractor to size the inner-duct for each cable run. Multiple fiber optic cables can occupy an individual inner-duct when non-armored fiber is not used.

PART 16 CAMPUS CABLING

A. Outside Plant Cabling

1. The contractor is to follow the drawings regarding the installation of outside plant (OSP) cabling to buildings remote from the main building, such as portable rooms, trailers, other small buildings, etc. Many remote buildings can be served by conduits underneath or within ceilings of protected overhangs and bridges.
2. The contractor is to furnish and install outside plant cables and associated protector blocks, splice cases, and grounding where applicable in an approved manner.
3. The contractor will be responsible for obtaining all required right-of-way easements and permits before any excavation on the property begins.
4. All existing facilities in the area of excavation will be located and marked with paint, stakes, or flags before any excavation.
5. Outside plant optical fiber cable shall be 50/125 laser-optimized singlemode strands loose-buffer tube water- blocking for outside plant application.
6. Outside plant copper cable will be solid insulated conductors 24 AWG with gel-filled core in 25-, 50-, or 100-pair increments.
7. RG-11 coaxial cable rated for OSP use will be used between buildings. Outside plant cables are to be routed aerially, underground, or buried by designed. Contractor may provide recommendations as to cable routing for approval.
8. Where noted, the contractor is to use aerial plant cabling between buildings. In cases where cables are attached to poles or buildings, aerial spans are not to exceed 100 ft from the last pole to the building, using slack span construction (no guying at either end). EIA/TIA guidelines and NEC code are to be strictly adhered to for separation and clearances from power lines and traffic.
9. Underground Cable is to be enclosed in conduit buried at least 24 inches below ground surface. In situations where fiber optic cables will be used, inner-ducts will be placed inside conduits to ensure physical protection for the cable. Proper fill ratios must be observed as well as proper bend radius. Metal sleeves through the foundation will be used to prevent conduit shearing. Sleeves must extend from inside the foundation wall to a minimum of 12”. The end of the conduit within the building must be securely fastened to withstand the placing of cable. Sleeves are to be sealed with plugs or sealant. Conduit must be bounded and grounded in compliance with EIA/TIA and NEC requirements.

10. Minimum depth of trench should allow for 24 inches of cover from top of cable to final grade. Upon refilling the trench, the soil must be tamped to prevent sunken trench appearance. Conduit sleeves will be used for penetrations through foundation walls, using the same guidelines as for underground cable. OSHA regulations concerning shoring requirements must be followed during all phases of buried cable installation. Contractor must install buried cable so as to meet minimum separation distances from adjacent structures (power, gas, water, etc.) To minimize the chance of accidental dig-up, contractor will install detectable warning tape a minimum 18 inches above cable.

11. Multi-pair protector blocks shall be installed to provide protection from voltage surges and sneak current. The protector panel shall be equipped with 110 wiring block and solid state protector unit's type 4C, and others depending on the situation. Project Manager will coordinate with contractor. Protector panels shall be installed within 50 feet of each outside plant cable building entry point. Protector panels must be grounded and bounded to the building grounding system.

12. Splice cases shall be provided and installed at both ends of outside plant cables. Splice cases shall be used for cable transition from to inside plant cables.
    - Fiber optic splice cases shall be designed to seal, bind, anchor, and protect cable splices and transition points from outside plant to inside plant cables. The case shall be fully equipped with a suitable splice kit for the fiber quantities specified.
    - Copper splice case shall be designed for use with non-pressurized cable. The case shall be of a durable fire-retardant material, single piece with a hinged cover. The case shall be equipped with a cable entrance end plates assembly of adequate size to accommodate entering and exiting cables, ground straps, and all necessary termination, mounting hardware.

13. Pedestal/Cabinet shall have a heavy gauge galvanized steel housing or equivalent and be weather-resistant for the termination of copper and fiber optic cables. It shall be equipped with ground bar, protector blocks, and adequate space for splice cases to accommodate transition of cables into or out of the cabinet. Pedestal/Cabinet size dependent upon each situation.

14. All OSP cables will be grounded according to EIA/TIA and NEC standards and codes.

15. Contractor is to install a RG-11U Plenum Coaxial cable between the existing CATV Head-End Location and the MDF Room when indicated in the attached drawings. Not all buildings have a CATV Head-End, but if it exists, it will be noted on the attached drawings. These cables are not to be terminated, but must be neatly coiled and tie-wrapped with 40 feet of slack cable remaining at each end.

PART 17 PATCH CABLES

A. Patch cables should meet the minimum performance requirements specified for each system. This requirement specifically prohibits the use of flat, non-twisted (also known as "silver satin") cords for Data or local area network applications. However, "silver satin" patch cables are acceptable for use in telephone systems.

B. The contractor shall provide two Category 6 Patch Cords for each end of each standard outlet for horizontal LAN connectivity. The cords are to be of varying lengths based on the patch panel, electronics equipment, and work area configurations. The quantity and lengths are to be documented and agreed upon, and the owner or Project Manager is to sign for them upon acceptance. These cords are to be stored in the MDF or IDF room for which they are designated.

C. The contractor is to provide dual LC to LC Patch Cords for connectivity for ports or equipment served

by the fiber patch panel. The cords are to be of varying lengths based on the patch panel and electronics equipment configurations. These cords are to be stored in the MDF or IDF room for which they are designated.

D. Fiber Patch Cords

1. Fiber Patch Cord Requirements

- Provide factory-made, dual LC to LC fiber cables in 1-Meter lengths for every fiber cable installed.
- LC Optical fiber patch cords shall be constructed with aramid-reinforced PVC loose-jacket duplex cable, with optical fibers having a 900-micron PVC buffer coating diameter. Optical fiber used in 10 GbE patch cords shall be laser optimized 50 or OS2 singlemode, per ANSI/TIA/EIA-492AAAC, with no substitutes.
- 50 micron core optical fiber within the patch cord cable shall be graded index type in accordance with ANSI/TIA/EIA-492AAAC, with the following specifications:
  a. Core diameter: 50 +/-3.0 microns, or 8.3 micron for singelmode
  b. Cladding diameter: 125 +/- 2.0 microns
  c. Core/cladding concentricity: less than 3.0 microns
  d. Core non-circularity: 6% maximum
  e. Proof test: 100 kpsi
  f. Effective modal bandwidth: 5700 MHz•km
  g. Coating diameter: 245 +/-15 microns
  h. Buffer diameter: 900 microns nominal
- Connector terminations on each end of the fiber patch cord shall be heat-cured epoxy type with a machine polish, inspected 100% for polish quality and mated-pair insertion loss.
- Epoxy volume within each connector shall be sufficient to properly surround and strain relieve the fiber and buffer layer at the buffer/fiber transition inside the connector body.
- Optical fiber patch cords shall be supplied in a sealed plastic bag with dust caps installed on each end, with insertion loss test results included.
- Optical fiber patch cords shall be available in standard lengths of 1, 2, 3, and 5 meters.
- Optical fiber patch cords shall be manufactured with industry standard LC or LC connector terminations on each end.
- Factory mounted connectors on each end of the patch cords shall comply with the applicable ANSI/TIA/EIA-604 Inter-mateability standard.
- Buffered fiber strands within the cable jacket shall be surrounded by aramid (Kevlar) material serving as a strength member.
- The aramid (Kevlar) strength member shall be mechanically secured at each connector to provide tensile strain relief of the optical fiber.
- Additional strain relief of the buffered fiber shall result from crimping the rear of the connector during termination.
- Duplex fiber patch cords shall be a zip-cord cable construction with jacket cross-section dimensions of 3.0 mm X 6.0 mm for LC style.
- Duplex fiber patch cords shall have reverse-pair polarity according to ANSI/TIA/EIA-568-B.3 and TIA/EIA-TSB-125.
- Cable jacket shall be marked with the cable manufacturer, UL Optical Fiber Non-Metallic Riser rating (Type OFNR) designation, lot number, and fiber core/cladding diameter designation.

- Fiber A-B polarity shall be clearly marked on each end of duplex patch cords.
- Optical fiber patch cord jacket color shall be aqua blue, specifically for 50 micron laser optimized singlemode fiber cables.
- Fiber patch cord connector materials shall be as follows:
  a. LC Ferrules: zirconium ceramic
  b. LC housings: injection molded thermoplastic
  c. Dust Cap: nylon or PVC
  d. Strain relief boot: UL94-V0 molded PVC
  e. Strain relief boot on all connectors shall be beige.
  f. LC connector outer housing shall be beige.

2. Fiber Patch Cord Performance Requirements

- 50 micron laser optimized and singlemode patch cords shall have a maximum mated-pair insertion loss of 0.60 dB per end, with a minimum return loss of –20 dB.
- Fiber patch cords shall exceed 10 Gigabit Ethernet performance requirements of IEEE 802.3 standard.
- Fiber patch cords shall exceed the mechanical reliability requirements for tensile, flex, twist and impact as specified in ANSI/TIA/EIA-568-B.3, Annex 'A'.
- Fiber patch cords shall exceed the environmental reliability requirements for high/low temperature and humidity as specified in ANSI/TIA/EIA-568-B.3, Annex 'A'.

3. Acceptable Manufacturers:

- Hubbell Premise Wiring.
  The Hubbell products listed in the table below comply with all requirements specified in this document

HUBBELL CATALOG NUMBER	Description
DFPCLCLCFyySM	LC-LC Optical Fiber Patch cords, OS2-SM, yellow

(yy=length-1,2,3,5m)

- Or approved equal of: Ortronics, Panduit, Systimax.

E. Category 6 Patch Cords

In new construction projects, the default cabling infrastructure shall be Category 6 unless specified otherwise.

1. Category 6 Patch Cord Requirements

- The contractor shall provide two Category 6 Patch Cords for each end of each standard outlet for horizontal LAN connectivity. The cords are to be of varying lengths based on the patch panel, electronics equipment, and work area configurations. The quantity and lengths are to be documented and agreed upon, and the owner or Project Manager is to sign for them upon acceptance. These cords are to be stored in the MDF or IDF room for which they are designated.
- Category 6 patch cords shall be constructed with a clear polycarbonate plug and boot having vertically staggered, trifurcated contacts, each having 50 micro-inches of gold plating.
- Plug dimensions and function shall comply with FCC 47, Part 68.5.

- Patch cords shall have a snag-less feature, integral to the strain relief boot on each end.
- Patch cords shall be constructed with category 6 patch cable, with 24 AWG 7/32 tinned copper stranded conductors, each insulated with polyethylene, and overall jacket with UL flame-retardant PVC.
- Patch cords shall be manufactured using a T568B wiring format, and shall function suitably for either T568A or T568B wiring schemes.
- Patch cords shall be available in the following colors: black, blue, gray, yellow, orange, red, green, white, and purple. Custom lengths and colors shall be available with a delivery lead-time quotation.
- Standard patch cord lengths shall range from1 ft. to 20 ft.
- Category 6 patch cords shall be backward compatible with existing Category 5 and 5e cabling systems for fit, form, and function.

2. Category 6 Patch Cords

- All transmission performance parameters shall be independently verified by a UL or ETL third party testing organization.
- Category 6 patch cords shall be channel performance balanced with Hubbell category 6 jacks, patch panels, and punch-down blocks.
- Category 6 patch cords shall meet or exceed Category 6 component transmission requirements for connecting hardware, as specified in ANSI/TIA/EIA-568-B.2-1 standard.
- The manufacturer shall provide Category 6 component compliance certificates from third party testing organization upon request.
- Patch cords shall be cUL and UL LISTED 1863.
- Patch cords shall exceed IEEE 802.3 DTE Power specification to 4 times the rated current limits with no degradation of performance or materials.
- Patch cords shall be third party verified, error-free Gigabit Ethernet performance to IEEE 802.3 standard.
- Jacks shall exceed 4 Gb/s data transmission capacity within the bandwidth of 1 – 250 MHz when configured in a 4-connector channel.
- Category 6 patch cords shall meet or exceed the 4-connector channel transmission performance requirements of Category 6, per ANSI/TIA/EIA-568-C.2 standard.
- The 4-connector channel test configuration shall utilize Category 6 patch panels, blocks, and jacks,

3. Acceptable Manufacturers:

- Hubbell Premise Wiring.
  The Hubbell products listed in the table below comply with all requirements specified in this document

HUBBELL CATALOG NUMBER	Description
HC6xx01	Category 6 Patch Cord, 1FT
HC6xx03	Category 6 Patch Cord, 3FT
HC6xx05	Category 6 Patch Cord, 5FT
HC6xx07	Category 6 Patch Cord, 7FT
HC6xx010	Category 6 Patch Cord, 10FT
HC6xx15	Category 6 Patch Cord, 15FT

HC6xx20	Category 6 Patch Cord, 20FT
HC6xx25	Category 6 Patch Cord, 25FT

xx = Cable Color. Replace xx with "W" for White, "BK" for Black, "B" for Blue, "GY" for Gray, "GN" for Green, "P" for Purple, "OR" for Orange, "R" for Red, "Y" for Yellow. Refer to project drawing for color applications.

- Or approved equal of: Ortronics, Panduit, Systimax.

PART 18 FIRE STOP - PENETRATION SEALANT

A. Provide fire-resistant silicone foam fill to restore fire ratings to all wall, floor, or ceiling penetrations. Foam must be UL classified and meet NEC and local code.

B. All penetrations through fire-rated floors and walls shall be sealed to prevent the passage of smoke, fire, toxic gas, or water. The fire rating of the penetration seal shall be at least that of the floor or wall into which it is installed, so that the original fire rating of the floor or wall is maintained as required by Article 300-21 of the National Electric Code.

C. No flammable material may be used to line the chase of the hole in which the fire stop material is to be installed.

D. When damming materials are to be left in place after the seal is complete, then all such materials shall be non-flammable.

E. The sealant shall be poured into the hole after each cable has been spread to allow a minimum of ½" of foam to flow between them. No cables may be touching each other, because contact between cables could allow voids to form in the fire stop.

F. If plastic cartridges are used for smaller installations, the chemical components of the foam shall be pre-measured within the cartridges to ensure the proper ratios.

G. The sealant shall remain resilient and pliable to allow for the removal and/or addition of cable without the necessity of drilling holes. It shall adhere to itself perfectly to allow any and all repairs to be made with the same material. It shall allow for vibration, expansion, and/or contraction of anything passing through the penetration without affecting the seal, or cracking, crumbling, and spalling.

H. When sealant is injected into a penetration, the foam shall expand to surround all the items within the penetration at that time and be fire resistant, maintaining the pass-minute rating.. No heat shall be required to further expand the foam to block the passage of fire and smoke or water.

I. The foam sealant material shall have been subjected to fire exposure testing in accordance with standard time-temperature curve in the Standard, UL, ASTM E

J. 119, and NJPA 251. The foam fire-stop material shall also have been subjected to the hose stream test in accordance with UL 10B.

PART 19 TESTING

A. General Test Procedures

1. Before an application for final acceptance of the work will be considered, all tests stated within this section shall be satisfactorily completed. The communications work shall include miLCellaneous tasks, (e.g., removal of panel trims, junction, and pull box covers) deemed necessary to demonstrate compliance with the requirements of the Communications specifications, as well as cable and equipment manufacturers' recommended installation procedures.

2. Upon completion of testing and problem resolution, all connections must be 100% error free: "Error

free" is defined to mean the item meets all the manufacturers' specifications and recommendations as published in their latest manufacturing manuals for proper installation and testing. In addition, each item must conform with all other related industrial practices and standards, Building Trades, and Electrical and Communications Industry Standards and Practices.

3. Upon successful completion of each item of testing, the Contractor shall issue in writing a certificate of compliance, along with the test results, to the Project Manager. All failed CAT-6 – 6a cables and/or Fiber strands shall be clearly labeled and identified as defective, with the type of defect (i.e. open ring side, grounded tip, short, excessive loss, etc.) identified.

4. The Contractor will attempt to remedy any defective copper cable pair or Fiber cable strand and specify in the documentation the location of the problem as identified during the testing procedures. The Fiber trouble location and identification must be completed with an OTDR.

B. Copper Cable Test Procedures

1. Contractor must complete cable system performance verifications on all copper and fiber cable as specified below and provide the test results to the owner or project manager. Category 6 – 6a cable must meet or exceed all manufacturer's and EIA/TIA standards for performance and installation. Fiber cable must also meet or exceed all manufacturer's and EIA/TIA standards for performance and installation.

2. All copper and fiber optic testing documentation is to be submitted on a CD, as well as 8.5" x 11" hard copies.

3. At a minimum, in addition to any other required testing, the Contractor shall conduct and report on the following tests of copper cabling after the installation is complete:

   - MDF-to-IDF tests of all new riser pairs installed under this contract, to determine continuity, shorts, crossed pairs, correct pinning, and grounds.
   - IDF (110 frame or patch panels)–to-information outlet tests of all new cable pairs installed under this contract, to determine continuity, shorts, crossed pairs, correct pinning, and grounds.
   - The coaxial cable is to be tested from the MDF Room to the IDF Room and from the IDF Room to the coax outlet. Contractor is to test for continuity, shorts, and grounds.
   - The horizontal Category 6+ – 6a cabling, installed from the IDF Room to the Information Outlet at the workstation, is to be manufacturer certified and warranted for Category 6+ – 6a compliance. All manufacturers' performance certificates and extended warranties are to be provided to the owner or project manager upon completion of the testing and manufacturer certification. Contractor is to present copies of certificates identifying the contractor as a current certified VAR for the selected cabling system and therefore, qualified to install a certified cable plant.
   - All category 6+ – 6a cabling is to be tested end–to-end and documented for Category 6+ – 6a compliance at all frequencies up to and including 250MHz for 6 – 6a. Such testing is to comply with the procedures and standards outlined by the cable manufacturer and EIA/TIA TSB - 67 concerning testing of Category 6+ – 6a cable plant.
   - A certified Cat 6+ –6a testing system is to be used for such testing to insure that cable pairs are defect free. "Defect free" for the copper cable is defined as a copper pair not having any pair reversals, split pairs, shorts or opens. Test results shall be provided to the Owner or Project Manager within 2 days after testing or 5 days prior to the Owner connecting electronic equipment onto the cable network, whichever is sooner. The contractor must also provide

testing summary reports of all category 6+ – 6a cables including run numbers, and pass/fail results with respect to length, impedance, DC resistance, mutual capacitance, attenuation, NEXT loss, and active ACR. The contractor must also provide spreadsheet analysis of the linearly dependent parameters of length, DC resistance, mutual capacitance, and attenuation; the field measured values shall be compared to the specifications values on one spreadsheet.

- In the event that a CAT 6+ – 6a cable fails to perform to the manufacturer's specifications, the Contractor will, at the owner's request, remove the cable and replace it with a new cable, replacing the defective cable at no additional expense to the owner.
- End-to-end testing is required for every RJ-45 connection. An owner's representative may accompany the Contractor's staff to witness the end-to-end testing. End-to-end testing is defined herein as testing all cabling links to the very last termination point. The Contractor is required to supply sufficient quantities of two-way radios and test equipment to ensure that the tests are completed accurately and expeditiously.
- The Owner, DTI, or Project manager may conduct performance tests of transport electronics connected to the cabling system. Successful equipment performance tests do not relieve the Contractor from the specified testing, repair, and documentation requirements.
- The Contractor shall provide to the Owner or Project Manager with copies of all copper-cable test results.

C. Fiber Optic Cable Test Procedures

1. All fiber optic cable and associated equipment lateral, and vertical riser cabling must be thoroughly tested. The fiber cable will be accepted only after each strand is tested in accordance with the specifications defined herein. All strands are to be tested and found to be 100% acceptable.

2. The Contractor shall test all cables, connectors, associated equipment, and hardware furnished by the Contractor upon receipt of same as defined herein.

3. As a minimum, the Contractor shall test, as described below, all optical fiber cable strands installed within the scope of this proposal:

   - Fully test complete links only. Piecemeal testing is not acceptable.
   - Perform end-to-end, bi-directional attenuation (loss) test for each fiber strand at 1310 and 1550 for singelmode. Conduct tests in accordance with EIA/TIA-526-14, Method B and with test instrument manufacturer's published instructions.
     a. Demonstrate that measured link loss does not exceed the expected value based on the number of mated connector pairs, the connector's published loss per mated pair, and the cable's published loss based on distance.
     b. Strands whose measured attenuation falls outside the acceptable range shall be subject to further inspection and testing to determine the nature of the fault. At a minimum, an OTDR shall be used to: determine the true loss for each connector pair and the exact length of the fiber, and to identify the presence of any core damage.
     c. Riser end-to-end testing of individual optical fibers is considered to be from the MDF Room to the IDF Rooms distribution panels on each floor.
     d. Horizontal end-to-end testing of individual optical fibers is considered to be from each floor's IDF Room's Fiber Distribution Panels to the Information Outlet.
   - Faults related to connectors shall be corrected and the fiber re-tested as stated above until acceptable attenuation measurements are received.

- Where defects are found to be inherent in the fiber itself, notify the Project Manager in writing. Upon obtaining approval by the Project Manager, replace any cable having fewer than the manufacturer's guaranteed number of serviceable fibers.
- Remove all newly installed defective cables from pathways. Do not abandon cables in place.
- All test results and corrective procedures are to be documented and submitted as a spreadsheet, and digitally on a USB thumb drive to State/DTI within five (5) working days of test completion.
- Considering that the fiber cable plant is to be certified, each test report form shall provide at least the following information:
  a. Project name
  b. Contractor's name
  c. Date(s) of preparation and of testing
  d. Fiber type, strand count, connectors and patches
  e. Designated cable number (regardless of whether only one cable of each type is present) and individual fiber numbers
  f. Make, model, serial number, and date of last calibration of test equipment used
  g. Name of test crew foreman
  h. Test results: Calculated maximum link loss, length of run, OTDR, and also
  i. Power Meter-measured link loss for each fiber, pass/fail result, and comments.
- In addition to the tests specified above, the Contractor shall be present while the Owner or Project Manager conducts performance tests of the transport electronics connected to the cabling system; the contractor shall conduct on- the-spot cable tests and effect cable plant repairs as necessary. Successful equipment performance tests do not relieve the Contractor from the specified testing, repair, and documentation requirements.

- Recommended test equipment:
  a. Optical fiber power meter and Light Source: OS-100D Light Source, or equivalent.
  b. TDR: Tektronix TFP2 FiberMaster, Laser Precision TD-2000 or equivalent with 850nm and 1300nm emitter modules and hard copy printout, or equivalent.
  c. Optical fiber inspection scope: Cambridge Instruments 10x fiber scope, or equivalent.

- The Contractor shall provide copies of all fiber and copper cable test results to the Owner or Project Manager.

- All fiber optic cabling (workstation and riser) is to be installed in a manner that complies with and allows Owner to receive the manufacturer’s extended warranty. The contractor is to be certified and authorized to provide the extended warranty. A manufacturer's extended warranty is to be provided, through the contractor, upon completion of the testing and manufacturer’s certification. Contractor is to present copies of certificates identifying the contractor as a current certified VAR and therefore, qualified to certify and install the cable plant.

- The Owner and Project Manager reserves the right to observe any or all portions of the testing. Notification of testing is at least three days prior to start of testing.

D. Replacement

Any fiber strand, connector, block, or module installed by the Contractor that fails to meet the loss budget, or that tests below the manufacturer's standards, shall be replaced at no additional cost to the owners or State/DTI. The replacement cable, connector, or part shall be tested after repairs have been made to verify compliance. Only equipment that meets

the installation requirements stated herein shall meet the system's acceptance requirements.

E. Source Manufacturing/Quality Control

Cables that are supplied by the Contractor, and test outside of the factory test data by a margin of 10 percent on loss, may be deemed non-usable and returned to the manufacturer for replacement.

F. Physical Inspection

Prior to conducting any transmission testing, the following visual inspections will be performed:

1. Verify that all cable has been installed in full compliance with the proposal specifications.
2. Check for physical damage to the Fiber Distribution Panels and termination hardware.
3. Check that all cabling is properly jacketed, installation properly labeled at both ends of the cable, inner-duct and termination hardware is completed in all IDFs and the MDF Room.
4. Verify that all cable bends are within the manufacturer's specified bend radius.
5. Verify that all cabinets and racks (which require grounding) are properly grounded and comply with the National and Local Electrical Codes and State Standards for grounding.
6. Verify that the cables are properly approved and structurally supported for termination.
7. Verify that all Delaware Fire Code requirements have been met and satisfied.

G. DOCUMENTATION

Proper labeling and documentation will allow a technician to quickly trace a particular cable link and will significantly reduce the time and costs of moves, additions, changes, and troubleshooting. Both labeling and documentation depend on the use of a system-wide coding LCheme that will identify and locate each component of the wiring system and allow all components to be linked in a logical fashion.

There are three components of wiring system documentation:

1. Labeling Communications/Data room/closet termination areas aids in identifying the source and function of a circuit.
2. A labeling scheme simplifies the documentation process.
3. "As built" documents provide a permanent record of the communications infrastructure. These documents are a critical management resource. As a result, it is imperative that "as built" documentation be prepared as part of the communications infrastructure project. In addition, these documents must be kept current throughout the system's life cycle.

H. Termination Blocks

Labels on the connecting hardware should be coded based on the function of the terminated wiring. Colored designation strips are typically provided with a termination block.

I. Cable and Information Outlet Identification

The Contractor shall furnish and install cable tags labeled with identifying cable numbers mutually agreed upon with contractor and the Owner or Project Manager.

1. The Contractor shall clearly and consistently mark the appropriate designation strip labels on all termination hardware mutually agreed upon with the Owner or Project Manager. Contractor will submit a sample of all designation labels for approval before installation.
2. The Contractor shall affix outlet identification labels, machine printed or typed, with identifying cable numbers as shown on the attached drawings.
3. Subsequent to pulling and terminating cables, the Contractor shall place the appropriate cable tags within six (6) inches of each end of each copper cable and eighteen (18) inches of each optical fiber cable end.
4. If the cable tape becomes illegible or is removed at any time during the job, the
5. Contractor shall immediately replace it with a duplicate preprinted cable tag.
6. The Contractor shall provide the Owner or Project Manager with a listing of all cable identification numbers, keyed to cable types.
7. Contractor will label each information outlet with the following labeling scheme: If the 1st floor IDF closet "A" is the origination point of the cable feeding workstation "007" the following is the configuration of the label to be installed:

   Floor- IDF Closet - Information Outlet Number
   Example: 1A-007

8. Contractor will submit for approval a sample of all information outlet designation labels.

J. "As-Built" Documentation

Maintaining records and documents is the most important portion of the administration of a communications infrastructure. Maintenance and moves, additions, and changes can become very difficult if a current set of records and documents is not maintained. In fact, isolation and resolution of problems are often delayed because configuration information is either unavailable or outdated.

Subsequent to the installation and prior to acceptance, the Contractor shall prepare and issue As-Built drawings, in an AutoCAD format, that shall reflect the lengths of cables installed and the actual manner and conditions of installation, including all deletions from, additions to, or departures from the contract documents. These documents are to include the information outlet station numbers and cable routing where they vary from the original plan. A copy of these documents will be stored in the MDF, with a master copy located at the Owner or Project Manager.

K. Cable Management System

Wiring and equipment relationships must be maintained in a database or spreadsheet (depending on their complexity). The best approach is to use a third- party vendor's application for tracking cable management. These records contain comprehensive information about the users' communications configuration. The information will be very valuable in the support of long-term user-community communications requirements.

PART 20 APPENDIX A – COMMUNICATIONS PLANNING CHECKLIST

A. Space allocation for Communications/Data room/closets

1. **Based on a number of factors, including the:**
   - Type of equipment to be installed
   - Size of the phone and data termination backboards
   - Access to floor cores and conduits
   - Cable tray requirements
   - Location, size, and swing of the Communications/Data room/closet door(s)
2. Square footage is not as important as the actual floor dimensions and the placement of the equipment. It is possible to design around some obstacles and still have a functional facility. For instance, an oblong room is not as desirable as a square room having the same square footage.
3. The criteria for establishing the size of a Communications/Data room/closet and determining whether or not it is functionally acceptable are complex. Answering the following questions is the first step in determining the long-term feasibility of a communications room or closet:
   - What will be the closet's primary function: phone, data, or combined services?
   - Where is it located in proximity to serviced workstations, network rooms, and other Communications/Data rooms/closets?
   - What type of equipment is going to be in the room/closet?
   - Is it wall- and/or rack-mounted?
   - How much equipment will be put in the room/closet? What are the dimensions of those devices?
   - What are their environment requirements?
   - Based on the type(s) of equipment going into the room/closet, what is the installation, maintenance, and operator work space required around the equipment?
   - Can the equipment be attached securely to the structure?
   - What cable types are being used? What are the cable separation requirements? Where are the cables terminated within the closet?
   - Does equipment mounted in the closet require an open space? Is there any other device needing clear space?
   - Is the room/closet securable? Do other entities need access to the space? What are their space requirements?
   - What size is the door? Does it swing in or out? Can the door be modified?
   - Is power available? Can it support the room/closet electrical requirements? Can it be modified?
   - Does the room need air conditioning? Does it ventilate well? Can it be modified?
   - Where are the floor cores and the ceiling access points for conduits?
   - Are there expansion requirements? Can the expansion requirements be accommodated by the room/closet size? Can the closed be enlarged at a later date?

PART 21 APPENDIX B - CABLE INSTALLATION CHECKLIST

A. Check Local Building Codes

The requirements stipulated by Section 800 of the National Electrical Code for Communications cable installations produce an orderly installation. However, it is important to consult your building inspector to determine whether there are special local requirements. Strapping requirements depend upon the building's design, State and Local Standards, and codes. Terminations can be made in standard junction boxes.

B. Coordinate with Other Contractors

Plan to install the cabling system in new buildings after the power wiring, air- handling ducts, and ceiling supports have been installed, but before the ceiling tiles are in place. This will prevent damage to the cable system during construction.

C. Plan the Job

On a blueprint, mark all terminations and desired routings, if known, to accommodate future building modifications.

D. Label the Cables

Label each cable reel and its free end according to the termination locations marked on your blueprint.

E. Pull Cable into Place

Deliver the cable from the bottom of each reel, making sure not to kink, crush, or pinch the cable. Pull groups of cables to a logical point and then fan out to the individual termination points. Arrange the cables neatly so they are easily identifiable for relocation. Separate the Communications cables from other cables by at least six inches and avoid sharp edges, tight bends, and locations that would subject the cable to abrasion, corrosion, or moisture. According to the National Electrical Code, low-voltage cables cannot share a tray with power cables. Running signal cables close to power cables may also cause hum pickup. If in doubt about cable locations, consult the standards or the Owner.

F. Remove Slack

Remove slack in lines by pulling the cables back to the wiring room and by adjusting their ceiling location as needed.

G. Label and Cut

Label each cable and then cut it off, making sure to leave enough cable to reach the termination panel.

H. Tie Cables Together

Use cable ties to bundle and secure parallel runs together. Place the ties at intervals sufficient to prevent sagging and to maintain neatness. Distances between ties may vary from six inches to four feet, depending on the size of the cables.

I. Strap the Cable

Use straps to fasten the tied cable bundles to hangers at 4-foot or other appropriate intervals. The distance between hangers will vary from 3 to 20 feet, depending upon the strapping surface, the type and number of cables in each bundle, State and Local Standards, and codes. Make sure to support the cables with hangers rather than pipes, conduit, or other structures in the building plenum. If space permits, use existing hangers; otherwise, install new ones. Do not use straps that are too small for the cable diameter because they can cut or pinch the cable insulation.

J. Inspect the Job

Be sure that the cables are not resting on false ceilings or near electrical fixtures or sagging more than three inches from the point of the tie wrap.

PART 22 APPENDIX C - QUALITY ASSURANCE

A. All materials used shall bear the Underwriters' Laboratory, Inc. label, provided a standard has been established for the material in question.
B. All products and materials shall be new and unused, clean, and free of defects, damage, and corrosion.

PART 23 APPENDIX D - CODES, REGULATIONS AND STANDARDS

A. All installations and equipment shall be in compliance with, equal to or exceed the minimum requirements of OSHA, NEC, NEMA, IEEE, SAME, ANSI, UL, EIA, TIA recommendations and the rules, regulations and requirements of the Federal Communications Commission.
B. The installation shall comply fully with all applicable Local, County and State of
C. Delaware laws and ordinances, regulations, and codes.
D. Local electrical and building codes in Delaware may be more restrictive than national codes, recommendations or practice. Follow the most restrictive code or recommendations.
E. Should any change in plans or Specifications be required to comply with governmental regulations, the Contractor shall notify the Owner or Project Manager at the time of submitting the construction schedule.

PART 24 APPENDIX E - WARRANTY

Besides the manufacturer's extended warranty the Contractor shall submit a single Guarantee stating that all portions of the work are in accordance with Contract requirements and guaranteeing all work against faulty and improper material and workmanship, including work and materials of all subcontractors, manufacturers, suppliers, and sub trade specialists, for a period of twenty-five (25) years from date of final acceptance by the project manager, State/DTI, and Owner. Where guarantees or warranties for longer terms are provided, such longer terms shall apply. Within 24 hours after notification, the Contractor shall correct any deficiencies that occur during the guarantee period at no additional cost to Owner, all to the satisfaction of the Project Manager and or Owner.

When installed by a Certified Installer and used in a Structured Cable System, the manufacturer's extended warranty shall cover the installation for a period of 25 years against defects in material and workmanship. It shall also guarantee that it will support any current and future applications designed for Data transmission over the 100/500MHz link/channel, as defined in TIA/EIA 568A Communications Standard.

All move, add and change (MAC) activity shall be covered by the warranty provided it is performed by a Certified Installer.

PART 25 APPENDIX F - BID/QUOTE RESPONSE FORMAT

A. Proposal identification number or control number. This number will be used as a reference for this individual proposal and will facilitate coordinating multiple bids or quotes for the same location or job site.

B. Requesting State Agency and Contact name, phone number and address. This should be the name of the State agency requesting the quote or bid and that agency's contact person's phone number(s) and address.

C. Building or office location address. This address should be the actual location of the job site. This address should include the floor numbers, if more than one story, and building numbers or names, if more than one building is involved.

D. Total Cost of Bid/Proposal. This dollar amount should include the total material and labor cost. The material and labor cost should be stated separately and then totaled. Also state whether or not labor costs are based on prevailing wage standards or not.

Example:

Material	$3,500.00
Labor Prevailing	$2,750.00
Total	**$6,250.00**

E. Scope of Work. This section should be a written description of the work to be performed. It should be function-specific.

Example:

- Install, terminate both ends, test, and label XX work area locations consisting of one Voice and two Data CAT6 cables and CAT6 568-B RJ45 jacks.
- Install one Voice cable from the Communications Closet to the Fir/Security Alarm Panel location.
- Provide and install a 100-pair plenum-rated riser cable from the boiler room to the main communications closet and terminate on 110 type wall mount hardware.
- Provide and install 7' relay racks and CAT6 patch panels.

F. Material

The material should be and itemized list with manufacturer's name and part numbers, including all piece parts and quantity of each. Total man hours to complete the job should be included as an item in the list.

Hubbell Cable	Blue	C6RPB	2,800 ft
Hubbell Cable	White	C6RPW	2,000 ft
Hubbell Jack Single		HXJ6xx	14 ea
Hubbell Jack Double		HXJ6xx	14 ea
Hubbell 110 block		30200007	1 ea
Hubbell Panel P6E48U		951044344	1 ea
~~CIRCA protector panel~~		~~1880ECAS1-100G~~	~~2 ea~~
~~1 pair fuse CIRCA~~		~~4B1E~~	~~200 ea~~
etc.			
etc.			
etc.			
Labor Man Hours			72 hr

G. Warranty

This should include the name of the manufacturer from which the State will receive the warranty and the type and length of the warranty or warranties provided with the cabling solution that is proposed. 25 years is required.

PART 26 APPENDIX G – OUTSIDE PLANT – DELDOT SPECIFIC REQUIREMENTS – TRAFFIC CONSTRUCTION

A. DELDOT FIBER INSTALLATION OVERVIEW

- Varied Distances
  - 200 ft -65km
- Locations
  - Highways/Roadway
  - Buried conduit
  - Pole Line
- Typical installation methodology & work to include
  - Backhoe work
  - Trenching/directional boring
  - conduit
  - hand holes
  - Vaults
- DelDot Mandated Safety standards
  - OSHA – Occupational Safety & Health Administration
  - All Delaware road work safety requirements shall be in accordance with the DelDOT Manual on Uniform Traffic Control Devices (MUTCD) for Streets and Highways – Part 6 Temporary Traffic Control.
- DelDot Project Initiation Timeframes
  - Safety is priority one for all DelDOT projects – no road work will not be authorized without following the proper safety precautions and DelDOT safety approval. It some situations, DelDOT requires 2 week notice prior allowing road work to begin.

B. Deldot Singlemode Fiber Specifications & Purchasing requirements

- All fiber and splicing work must meet/exceed specification of Standards Bodies:
  - ANSI -American National Standard Institute
  - EIA/TIA -Electronic Industries Associations/Telecommunications Industry Association
    - Structured cabling systems for commercial buildings
  - NECA - National Electrical Contractors Association
  - BICSI – Building Industry Consulting Services Internation
  - State of Delaware and Local standards & code
  - ANSI TIA/EIA 758 (latest reference) Outside Plant Customer Owned Telecommunications Standard

- Fiber Cable Certification
  - Vendors must provide documentation, on a per job basis, written certification that all cables and services supplied as a result of this solicitation meet all current applicable ANSI EIA/TIA specifications and BICSI Guidelines
  - Testing methodology per section “Deldot Fiber Testing Requirements”
  - In order to adhere to warranty specifications and to standardize on cable specifications, the Delaware Department of Transportation has standardized on Corning fiber optic cable, which requires installation by a Corning EWP (Extended Warranty Program) Partnering Company. Also accepted are Sumitomo, Hubbell, and Fiber Connections.

C. DelDot Fiber Testing Procedure and Minimum Accepted results

- Single Mode Fiber
  - Maximum Bend Radius
    - Conductive cable - 15 times the cable’s outside diameter when being pulled
    - Nonconductive cable – 10 times the cable’s outside diameter when under no

load and 20 times the outside diameter when being pulled

- Fiber Connector Type
  - LC connectors – DOT standard is LC only
- OTDR Testing & Results
  - Anritsu –CMA 5000 or equivalent
  - Power meter – Corning OTS 600 Series Power Meter & Light Source or Equivalent
  - Maximum Loss
    - Optical fiber attenuation factor 1.5 dB/km standard limit, (e.g., TIA-568-C.3)
    - Connector Coupling loss .75 dB/pair standard limit, (e.g., TIA-568-C.3)
    - Fiber splice insertion loss .03 dB standard limit (e.g., TIA-568-C.3)
  - Utilize an optical fiber link transmission performance calculation worksheet to determine acceptable loss within specified run
- Splicing Requirements
  - Fusion splice according to the manufacturer's instructions.
  - Secured by a splice closure containing splice trays in groups of 12 or 24 fiber
  - DelDOT has standardized on the 3M Brand splice cases.
- Termination
  - Rack mounted enclosures are primary in the fiber hub and facilities and mounted on 19 Inch Racks
  - Pre-terminated Zuse Panel from Corning, Sumitomo, Hubbell or equivalent are used for device termination
  - Wall mounted enclosures with Rack mounted patch panels are used only when specified by the Fiber Committee.
  - DelDOT has standardized on Corning components for patch panels, enclosures and all related equipment or similar products from Sumitomo, Hubbell, or Fiber Connections equivalent.
  - Factory terminated duplex jumpers comply with optical fiber performance specifications of applicable standards (i.e., ANSI/TIA-568-C.3)
- Administration
  - Adherence to the Outside Plant Fiber Optic Naming Convention provided by DelDOT Document available upon request.
  - Deliverables – this document is attached, please reference ####.

D. Outside Plant Pathway

- Construction Of Outside Plant Pathway
  - Shall be in accordance with ANSI TIA/EIA 758 (latest reference) and BICSI Outside Plant-Customer Owned Manual and Telecommunication Distribution Methods Manual.
  - Maintenance Hole (Manhole) access – OSHA trained Confined space training
  - The department requirements contact to One Call before any digging.

- Inner duct
  - Qty 4 – 1" corrugated inner duct is required within 4" PVC or HDPE conduit with a pull cords and 12 gauge solid tracer wire
  - All inner ducts will be sealed with rubber inner duct plugs

- Conduits
  - All Conduit installed unless otherwise designated is 4 inch
  - Inside buildings, cabinets, Hubs, Telephone pole, Signal Poles or Maintenance holes and hand holes, end of conduits are to be sealed with rubber conduit plugs, water plug or duct sealer.

E. Product Substitution

- All items or services delivered during the life of the contract shall be of the same type and manufacture as specified or accepted as part of the State's contract.
- The Dept. of Transportation can change specification or vendors of equipment as a benefit to the state.
- Vendors are encouraged to offer any like substitute product (s), either generic or brand name for evaluation especially if an opportunity for cost savings to the state exists. The state requires the submissions in writing with specifications and/or product samples for evaluation prior to any approvals being granted.

F. Highway Safety

- Safety is priority one for all DelDOT projects – no road work will not be authorized without following the proper safety precautions and DelDOT safety approval. It some situations, DelDOT require 2 week notice prior allowing road work to begin.

Deliverables and long term administration of the Fiber Optic Program for Delaware Department of Transportation

The department of Transportation uses federal funds to provide most of the fiber requirements throughout the state of Delaware. Because the FHWA has more stringent requirements about the use of federal funds, the Department of Transportation Fiber Committee has put together a tasking and processing method that covers the requirements of federal reporting, Federal Audits as well as state audits. These additional deliverables are added to the cost of implementation and are covered as a line item in the proposals.

Fiber Tasks for the Department of Transportation

- The process for fiber implementation starts with the design phase and can take years to implement or even get funded. Starting at the design level, the department's fiber committee helps to insure that all the designs cover the fiber requirements as they pertain to the department's overall strategic plan. It also considers ease of repair, ease of redirection and cost.

- The fiber contractor is responsible for providing quotes for specific requirements as determined by the department's fiber committee and the engineering department. The requests come in a formal packet that has a logical design, the footages and parts to be used for the implementation. The fiber contractor produces a quote in the format dictated by the department which includes a narrative of the request and a spreadsheet break out of the components to be used - to include all parts being used and the labor it will take to produce this final product. Examples may be requested if necessary.

- Once the Quote is received it is processed with the department's final design and then awaits funding. In some instances this may be weeks. In some instances this funding may never occur.

Fiber Contractors Role

- The contract as stated above will provide the department with quotes for specific tasks. When given a Notice to Proceed from the Departments Fiber Committee the task is deemed funded and the work will be schedule as described in the sections above.

- There are several different scenarios that drive the department's fiber program and requires flexibility on the Fiber contractor's part. Some of these issues are discussed below in more detail. The use of sub-contracts, the need for minor underground construction, tasks that encompass a fair amount of safety requirements due to the location of the sites that are being worked. I.E. I95, SR1 and bridge

work. As a rule most conduits and underground will be in place when the task is requested. There are times when that is not the case and underground construction will be required. Most of the time we are working outside but occasionally we will need to terminate and facilitate indoor facilities throughout the state.

Emergency Requirement

- Daytime call out is a common emergency where the fiber optic in the state has been impacted or severed by construction from the department or from a third party. There are times when it is considered an emergency when the fiber that was close to a project is not impacted, but discovered that it needs to be pulled out of the way and then re-instated. These types of call-outs are less frequent but not uncommon.

- Night Time and weekend call outs usually happen for some of the same reason, and can include weather events that cut the fiber or a tree falling, etc.. There are a few scenarios where this type of call-out is necessary.

- The fiber contractor must be able to be in contact with the representative from the state within a two hour time frame, 24 hours a day, seven days a week. The department also expects the contractor to be on site with their equipment, in four hours.

Deliverables

Logical Drawing vs. As Built. As a deliverable of a finalized task, the department requires what we call a logical. These are in Visio format and are incorporated into the master documentation of the departments overall fiber documentation. These are not to scale, but do require more detail from a fiber perspective than an as-built. As-builts, we consider to be markups of the original designs with field notes that show any deviation from the original task/ proposal. We do not require a formal as-built but we are not always able to inspect every aspect of the task. If the fiber contractor discovers that the field work deviates from the design, this should be reflected in the field notes, and if easier to explain, in a drawing or a markup of the logical or the as-built.
Note: Incorporation of Logical Drawings – The department's fiber committee will review the logical, provide the quality control function, ask for more detail or clarification if needed, and incorporate the final product into the corridor of the state road information system.

- GPS information – is required from the fiber vendor. This information should be provided to the department in an .mdb format, and include all information as it pertains to the conduit, the fiber, the compass direction, the wells, and intelligent devices. The department will provide the data dictionary for the collection of this information.

The department uses Trimble handhelds for the collection of the data in conjunction with Pathfinder and TerraSync software by Tremble. Both the GPS unit and the software necessary to use it, including the pathfinder licenses and TerraSync licenses, are the responsibility of the contractor.

- ODTR information is provided to the state in the deliverable package and will be reviewed during the quality control process. Failures of fiber strands, for any reason, in the field are unacceptable unless otherwise directed by the fiber committee.

- Power Meter Data is provided to the state in the deliverable package and will be reviewed during the quality control process. Failures of fiber strands, for any reason, in the field are unacceptable unless otherwise directed by the fiber committee.

- Packing Slips – all equipment bought for a specific task will have packing slips. The department is required to collect and store copies of these slips for the purpose of audit. Any deliverables packages that do not contain all of the deliverable elements will be rejected.

Warranty Information – all warranty information as it pertains to the purchases of equipment for a specific task will be provided to the state in this deliverable package. This is to include the Corning, Sumitomo or Hubbell Cabling System, 25 Year guarantee for all projects.

-

- Field Notes and Drawings will be digitized/ scanned and provided in the deliverable package.

- Final inspection – although this is not a physical deliverable, no deliverable package will be considered for payment or quality review until a final walk through has taken place.

Deliverable Review

- Fiber Committee Review – all deliverables go through the fiber committee for final review and quality control.

- If there are any omissions or information needs to be clarified or re-surveyed, the committee will provide the vendor with the request and the payment/ invoice will be put on hold until the requested information is re-submitted.

- Once the new information has been received the fiber committee will review the information and process payment if all deliverables meet the department's requirements.

Final Documentation Submission

Media
- Directory Structure – all deliverables will be provided to the state in a directory structure provided by the department's Fiber Committee.
- The information can be provided on a CD/DVD or Jump drive, which will be filed with the invoice information and not be returned.

- Invoice
  - Submission – Invoice submission should be to the chair of the department's fiber committee
  - Payment – payments are processed when all deliverables are met unless otherwise designated by the department's fiber committee
  - Re-submission – in some cases there is a need to request a re-submission due to cost changes or LCope changes. All changes in invoicing should have a valid change request deLCribing the need for the change in LCope or cost. These forms are generated by the department's fiber committee and signed by the fiber contractor.

Invoicing
- Once the department's fiber committee has processed the deliverables and the invoice has been checked for accuracy, the invoice is submitted for payment by the department's fiber committee chair.
- All information is filed and stored for review both physically and electronically.

PART 27 APPENDIX H - CERTIFIED CONTRACTOR LIST

Certified Contractor List (search for GSS21441A-DATA_CBL)

PART 28 APPENDIX I – Approved Equivalent Vendors

Approved Vendors

- Belden
- Mohawk

PART 29 Development and Revision History

Date	Revision
1/29/2021	Rev 8 – current version
11/1/2024	Rev 8 - Removed references to the Technology Investment Council and added a clarification in the Process section

SECTION 27 10 00
STRUCTURED CABLING FOR VOICE AND DATA (DTI)

PART 1 GENERAL

1.01 GENERAL PROVISIONS

A. The *Structured Cabling System Standards and Specifications for State-Managed Facilities* (Standard ID: *NE-Cabling-002*) as published by the State of Delaware Department of Technology and Information (DTI), referred to as the ***DTI Cabling Standard*** from here forward, shall be the specification that outlines the minimum requirements of the new voice/data cabling system to be provided in this project. This standard as authorized by Delaware Law, Title 29, Chapter 90C mandates the use of specific technology and products to establish consistency in both quality and security as well as interoperability. Applicable provisions of the entire ***DTI Cabling Standard***, including addenda, shall govern this section as fully as if repeated herein.This section references and modifies the ***DTI Cabling Standard*** to apply to this project.

B. **The Structured Cabling Contractor shall be one of the DTI-approved Structured Cabling Systems vendors currently listed under State of Delaware Contract No. GSS16441-DATA_CBL. The Contractor shall be responsible for furnishing, installing and testing the entire cabling system including all terminations. The Contractor must be certified and authorized for the installation and testing of the approved Manufacturer's premises cabling system, shall assume responsibility for certifying the installation and shall guarantee the installation for a period of no less than 25 years.**

1.02 SECTION INCLUDES

A. Communications system design requirements.

B. Communications pathways.

C. Copper cable and terminations.

D. Fiber optic cable and interconnecting devices.

E. Communications equipment room fittings.

F. Communications outlets.

G. Communications grounding and bonding.

H. Communications identification.

1.03 RELATED REQUIREMENTS

A. Section 07 84 00 - Firestopping.

B. Section 26 05 26 - Grounding and Bonding for Electrical Systems.
   1. Includes bonding jumpers for bonding of communications systems and electrical system grounding.

C. Section 26 05 33.16 - Boxes for Electrical Systems.

1.04 REFERENCE STANDARDS

A. *Structured Cabling System Standards and Specifications for State-Managed Facilities* (Standard ID: *NE-Cabling-002*) published by the State of Delaware Department of Technology and Information (DTI).

B. NFPA 70 - National Electrical Code; Most Recent Edition Adopted by Authority Having Jurisdiction, Including All Applicable Amendments and Supplements.

C. TIA-568 (SET) - Commercial Building Telecommunications Cabling Standard Set; 2015.

D. TIA-607 - Generic Telecommunications Bonding and Grounding (Earthing) for Customer Premises; 2015c, with Addendum (2017).

1.05 ADMINISTRATIVE REQUIREMENTS

A. Coordination:
   1. Coordinate requirements for service entrance and entrance facilities with Communications Service Provider.
   2. Coordinate the work with other trades to avoid placement of other utilities or obstructions within the spaces dedicated for communications equipment.
   3. Coordinate arrangement of communications equipment with the dimensions and clearance requirements of the actual equipment to be installed.
   4. Notify DEDC, LLC of any conflicts with or deviations from Contract Documents. Obtain direction before proceeding with work.

B. Arrange for Communications Service Provider to provide service.

C. Preinstallation Meeting: Convene one week prior to commencing work of this section to review service requirements and details with Communications Service Provider representative.

1.06 SUBMITTALS

A. See Section 01 30 00 - Administrative Requirements, for submittal procedures.

B. Product Data: Provide manufacturer's standard catalog pages and data sheets for each product.

C. Shop Drawings: Show compliance with requirements on isometric schematic diagram of network layout, showing cable routings, telecommunication closets, rack and enclosure layouts and locations, service entrance, and grounding, prepared and approved by BICSI Registered Communications Distribution Designer (RCDD).

D. Evidence of qualifications for installer.

E. Field Test Reports.

F. Project Record Documents: Prepared and approved by BICSI Registered Communications Distribution Designer (RCDD).
   1. Record actual locations of outlet boxes and distribution frames.
   2. Show as-installed color coding, pair assignment, polarization, and cross-connect layout.
   3. Identify distribution frames and equipment rooms by room number on drawings.

G. Operation and Maintenance Data: List of all components with part numbers, sources of supply, and operation and maintenance instructions; include copy of project record documents.

1.07 QUALITY ASSURANCE

A. Maintain at the project site a copy of each referenced document that prescribes execution requirements.

B. Manufacturer Qualifications: At least 3 years experience manufacturing products of the type specified.

C. Installer Qualifications: A company having at least 3 years experience in the installation and testing of the type of system specified, and:
   1. Employing a BICSI Registered Communications Distribution Designer (RCDD).
   2. Supervisors and installers factory certified by manufacturers of products to be installed.

D. Products: Listed, classified, and labeled as suitable for the purpose intended.

E. Product Listing Organization Qualifications: An organization recognized by OSHA as a Nationally Recognized Testing Laboratory (NRTL) and acceptable to authorities having jurisdiction.

1.08 DELIVERY, STORAGE, AND HANDLING

A. Store products in manufacturer's unopened packaging until ready for installation.

B. Keep stored products clean and dry.

1.09 WARRANTY

A. Provide per the ***DTI Cabling Standard***.

B. See Section 01 78 00 - Closeout Submittals, for additional warranty requirements.

PART 2 PRODUCTS

2.01 SYSTEM DESIGN

A. Provide a complete permanent system of cabling and pathways for voice and data communications, including cables, conduits and wireways, pull wires, support structures, enclosures and cabinets, and outlets, all conforming to the requirements of the ***DTI Cabling Standard***.

2.02 PATHWAYS

A. Provide per the ***DTI Cabling Standard***.

2.03 COPPER CABLE AND TERMINATIONS

A. Provide per the ***DTI Cabling Standard***.

B. Jacks and Connectors: Provide per the ***DTI Cabling Standard***.

2.04 FIBER OPTIC CABLE AND INTERCONNECTING DEVICES

A. Provide per the ***DTI Cabling Standard***.

2.05 COMMUNICATIONS EQUIPMENT ROOM FITTINGS

A. Provide per the ***DTI Cabling Standard***.

2.06 COMMUNICATIONS OUTLETS

A. Outlet Boxes: Comply with Section 26 05 33.16.
   1. Provide depth as required to accommodate cable manufacturer's recommended minimum conductor bend radius.
   2. Minimum Size, Unless Otherwise Indicated:
      a. Data or Combination Voice/Data Outlets: 4 inch square by 2-1/8 inch deep (100 by 54 mm) trade size.
      b. Fiber Optic Outlets: 4-11/16 inch square by 2-1/8 inch deep (119 by 54 mm) trade size.

B. Wall Plates:
   1. Provide per the ***DTI Cabling Standard***.

2.07 GROUNDING AND BONDING COMPONENTS

A. Provide per the **DTI Cabling Standard**.

B. Comply with Section 26 05 26.

2.08 IDENTIFICATION PRODUCTS

A. Provide per the ***DTI Cabling Standard***.

2.09 SOURCE QUALITY CONTROL

A. See Section 01 40 00 - Quality Requirements, for additional requirements.

B. Factory test cables according to TIA-568 (SET).

PART 3 EXECUTION

3.01 INSTALLATION - GENERAL

A. Comply with requirements of the ***DTI Cabling Standard***.

B. Comply with Communication Service Provider requirements.

C. Grounding and Bonding: Perform in accordance with requirements of the ***DTI Cabling Standard*** and NFPA 70.

D. Install firestopping to preserve fire resistance rating of partitions and other elements, using materials and methods specified in the ***DTI Cabling Standard*** and in Section 07 84 00.

3.02 INSTALLATION OF PATHWAYS

A. Comply with requirements of the ***DTI Cabling Standard***.

B. Outlet Boxes:
   1. Coordinate locations of outlet boxes provided under Section 26 05 33.16 as required for installation of telecommunications outlets provided under this section.
      a. Mounting Heights: Unless otherwise indicated, as follows:
         1) Telephone and Data Outlets: 18 inches above finished floor.
      b. Orient outlet boxes for vertical installation of wiring devices unless otherwise indicated.
      c. Provide minimum of 24 inches horizontal separation between flush mounted outlet boxes installed on opposite sides of fire rated walls.
      d. Unless otherwise indicated, provide separate outlet boxes for line voltage and low voltage devices.
      e. Locate outlet boxes so that wall plate does not span different building finishes.
      f. Locate outlet boxes so that wall plate does not cross masonry joints.

3.03 INSTALLATION OF EQUIPMENT AND CABLING

A. Comply with requirements of the ***DTI Cabling Standard***.

B. Identification:
   1. Provide per the ***DTI Cabling Standard***.

3.04 FIELD QUALITY CONTROL

A. See Section 01 40 00 - Quality Requirements, for additional requirements.

B. Inspection and Testing: Perform in accordance with requirements of the ***DTI Cabling Standard***.

END OF SECTION

SECTION 28 46 00
FIRE DETECTION AND ALARM

PART 1 GENERAL

1.01 SECTION INCLUDES

A. Modification and/or expansion of existing fire alarm system as indicated.

1.02 RELATED REQUIREMENTS

A. Section 07 84 00 - Firestopping.

B. Section 08 71 00 - Door Hardware:
   1. Electrically-operated locks and electromagnetic door holders for interface with fire alarm system.

C. Section 26 05 19 - Low-Voltage Electrical Power Conductors and Cables: For non-power-limited cables.

D. Section 26 05 33.16 - Boxes for Electrical Systems.

1.03 ABBREVIATIONS AND ACRONYMS

A. AHJ: Authorities having jurisdiction (for this project, the Office of the State Fire Marshal).

B. BAS: Building automation system.

C. DMNS: Distributed mass notification system.

D. ECS: Emergency communications system.

E. EoL: End-of-line.

F. EVACS: Emergency voice/audio communication systems.

G. FACU: Fire alarm control unit.

H. HVAC: Heating, ventilation, and air conditioning.

I. IDC: Initiating device circuit.

J. LAN: Local area network.

K. MNS: Mass notification system.

L. NAC: Notification appliance circuit.

M. NPLFA: Non-power-limited fire alarm.

N. PLFA: Power-limited fire alarm.

O. SLC: Signaling line circuit.

P. SOO: Sequence of operation.

1.04 REFERENCE STANDARDS

A. 36 CFR 1191 - Americans with Disabilities Act (ADA) Accessibility Guidelines for Buildings and Facilities; Architectural Barriers Act (ABA) Accessibility Guidelines; current edition.

B. ADA Standards - Americans with Disabilities Act (ADA) Standards for Accessible Design; 2010.

C. ICC A117.1 - Accessible and Usable Buildings and Facilities; 2009.

D. NECA 1 - Standard for Good Workmanship in Electrical Construction; 2010.

E. NECA 305 - Standard for Fire Alarm System Job Practices; 2018.

F. NFPA 70 - National Electrical Code; Most Recent Edition Adopted by Authority Having Jurisdiction, Including All Applicable Amendments and Supplements.

G. NFPA 72 - National Fire Alarm and Signaling Code; 2016.

H. NFPA 90A - Standard for the Installation of Air-Conditioning and Ventilating Systems; 2027.

I. UL 38 - Standard for Manual Signaling Boxes for Fire Alarm Systems; Current Edition, Including All Revisions.

J. UL 464 - Standard for Audible Signaling Devices for Fire Alarm and Signaling Systems, Including Accessories; Current Edition, Including All Revisions.

K. UL 864 - Control Units and Accessories for Fire Alarm Systems; Current Edition, Including All Revisions.

L. UL 1449 - Standard for Surge Protective Devices; Current Edition, Including All Revisions.

M. UL 1971 - Standard for Signaling Devices for the Hearing Impaired; Current Edition, Including All Revisions.

1.05 ADMINISTRATIVE REQUIREMENTS

A. Coordination:
   1. Coordinate arrangement of equipment with dimensions and clearance requirements of actual equipment.
   2. Coordinate placement of devices and notification appliances with potential conflicts or view obstructions.
   3. Coordinate work to provide power for equipment at required locations (e.g., smoke dampers, type of actuators, line or local control transformer, zoning, grouping and circuit activations).
   4. Coordinate requirements for branch circuit protection, identification, and shunt trip if applicable.
   5. Coordinate reflected ceiling plans to avoid conflicting placements; maintain minimum diffuser and detector clearances as indicated.
   6. Coordinate submittals to confirm equipment and associated components are capable of indicated settings, and manufacturer documentation identifies required compatible product listings.
   7. Notify DEDC, LLC of conflicts with or deviations from Contract Documents. Obtain direction before proceeding with work.
   8. Door Hardware: See Section 08 71 00 and coordinate, including access control panel locations.
   9. Lighting Controls: See Division 26.
   10. Non-Power-Limited Cables: See Section 26 05 19.
   11. See Section 01 91 13 - General Commissioning Requirements and coordinate for supporting requirements, including support of services not limited to installation checklists, acceptance testing reports, functional testing, and integrated system testing.

B. Preinstallation Meetings:
   1. Conduct meeting with facility representative to review devices, notification appliances, and equipment locations.
   2. Conduct meeting with facility representative and other related equipment manufacturers to discuss fire alarm system interface requirements.
   3. Conduct meeting to review anticipated installation of code-required smoke control requirements, product solutions, and SOO.
   4. Convene one week before starting work for review of documented SOO for system applications.

C. Sequencing:
   1. Verify exact termination locations required for boxes, enclosures, and equipment.
   2. Do not install devices or notification appliances until final surface finishes, painting, and cleaning are complete, unless otherwise required by AHJ.
   3. Do not begin installation of conductors and cables until installation of conduit and pathways between termination points is complete.
   4. Sequence work to protect cabling (e.g., overspray painting, physical stress, and insulation damage or covering markings).

5. Verify naming convention for equipment identification, including room names and numbers, prior to creation of final drawings, reports, and labels.

D. Scheduling:
1. Arrange access to facility for data collection with facility representative.
2. Where work involves interruption of existing electrical or fire alarm system service, arrange interruption with State of Delaware OMB - Division of Facilities Management.
   a. Arrange test start and end with responsible reporting service. Confirm system normal operating mode and record as-found and as-left settings.
   b. Arrange work to disable individual devices or circuits for minimal disruption if possible.
   c. Arrange in accordance with NFPA 72 fire alarm system impairment requirements.
   d. Where required by AHJ, arrange systems or partial system out of service interruption in accordance with requirements of building, life safety, and fire codes (e.g., approved fire watch plus required notifications, tags at each fire department connection and control valve, and AHJ notification when excess hours).

1.06 SUBMITTALS

A. See Section 01 30 00 - Administrative Requirements for submittal procedures.

B. Evidence of designer qualifications.

C. Comply with NFPA 72 chapter "Documentation," including noting names of installers, owners, and system classification information.

D. Design Documents: Submit all information required for plan review and permitting by AHJ, including floor plans, riser diagrams, and description of operation.
1. Copy (if any) of list of data required by AHJ.
2. NFPA 72 "Record of Completion", filled out to extent known at time.
3. Clear and concise description of operation, with input/output matrix similar to that shown in NFPA 72 Appendix A, and complete listing of software required.
4. Manufacturer's detailed product data sheet for each component, including wiring diagrams, and circuit length limitations. Catalog pages and product descriptions include ratings, dimensions, finishes, service conditions, and included features.
5. Certification by manufacturer of FACU that system design complies with Contract Documents.
6. Certification by Contractor that system design complies with Contract Documents.

E. Shop Drawings: Submit installation documentation required for plan review and permitting by AHJ, including floor plans showing locations of fire alarm system components, enlarged drawn to identified scale plan view, and riser diagrams.
1. System zone boundaries and interfaces to fire safety systems.
2. Show locations of components, circuits, and raceways; mark components with identifiers used in control unit programming.
3. Include elevations and details of proposed equipment arrangements.
4. Include system interconnection schematic riser diagram showing proposed and approved cable size and type; coordinated with floor plans and describing circuit class, survivability, and application specific information required by NFPA 72.
5. Include typical wiring diagrams for devices, notification appliances, remote indicators, annunciators, remote test stations, and EoL and power supervisory devices.
6. Include requirements and control diagrams for interfacing with other systems.
7. Circuit layouts; number, size, and type of raceways and conductors; conduit fill calculations; standby and spare capacity calculations; notification appliance circuit loop resistance and voltage drop calculations, including spare capacity.
8. List of devices and notification appliances on each SLC, with spare capacity indicated.
9. Manufacturer's detailed data sheet for each component, including wiring diagrams, installation instructions, and circuit length limitations.

10. Description of power supplies; if secondary power is by battery include calculations demonstrating adequate battery power.
11. Detailed drawing of graphic annunciators, displays, and interfaces.
12. Certification by either FACU manufacturer or manufacturer of related equipment.
13. Certification by FACU manufacturer that system design complies with Contract Documents.
14. Certification by Contractor that system design complies with Contract Documents.

F. Manufacturer's Installation Instructions: Indicate application conditions and limitations of use stipulated by product testing agency. Include instructions for storage, handling, protection, examination, preparation, and installation of product.

G. Evidence of installer qualifications.

H. Evidence of maintenance contractor qualifications, if different from installer.

I. Inspection and Test Reports:
1. Submit inspection and test plan prior to closeout demonstration.
2. Submit documentation of satisfactory inspections and tests.
3. Submit NFPA 72 "Inspection and Test," filled out.

J. Operating and Maintenance Data: See Section 01 78 00 for additional requirements; revise and resubmit until acceptable; have one set available during closeout demonstration:
1. Complete set of specified design documents, as approved by AHJ.
2. Detailed but easy-to-read explanation of procedures to be taken by non-technical administrative personnel in the event of system trouble, when routine testing is being conducted, for fire drills, and when entering into contracts for building renovations.

K. Project Record Documents: See Section 01 78 00 for additional requirements; have one set available during closeout demonstration:
1. "As programmed" operating sequences, including control events by device, and updated input/output chart.

L. Closeout Documents:
1. Certification by manufacturer that system has been installed in compliance with manufacturer's installation requirements, is complete, and is in satisfactory operating condition.
2. NFPA 72 "Record of Completion," filled out completely and signed by installer and authorized representative of AHJ.

M. Maintenance Materials, Tools, and Software: Furnish the following for State of Delaware OMB - Division of Facilities Management's use in maintenance of project.
1. See Section 01 60 00 - Product Requirements for additional provisions.
2. Furnish spare parts of same manufacturer and model as those installed; deliver in original packaging, labeled in same manner as in operating and maintenance data.
3. In addition to items in quantities indicated in PART 2, furnish the following:
   a. Tools, software, and documentation necessary to modify fire alarm system using State of Delaware OMB - Division of Facilities Management's personnel; minimum modification capability to include addition and deletion of devices, notification appliances, circuits, and zones, and changes to system description, and operation.
   b. One copy of software not resident in read-only-memory.
   c. Extra Fuses: Two for each installed fuse; store inside applicable control cabinet.
   d. Extra Cabinet Keys: Six spare for each cabinet lock provided; label key number and corresponding cabinet identifier; collect and provide to State of Delaware OMB - Division of Facilities Management facility manager.
   e. Extra Devices: Two of each installed initiation and notification device.

1.07 QUALITY ASSURANCE

A. Copies of Design Criteria Documents: For duration of project, maintain at project site copy of each referenced document that prescribes execution requirements; bound together. Also, NFPA 72, relevant portions of other applicable codes, and instructions and guidelines of AHJ. Include in submittals upon completion.

B. Designer Qualifications: NICET Level III (three) or Level IV (four) certified fire alarm technician or registered fire protection engineer, employed by FACU manufacturer, Contractor, or installer, with experience designing fire alarm systems in jurisdictional area of AHJ.

C. Installer Qualifications: Firm with minimum three years documented experience installing fire alarm systems of specified type and providing contract maintenance service as regular part of their business.
   1. Authorized representative of FACU manufacturer; submit manufacturer's certification that installer is authorized; include name and title of manufacturer's representative making certification.
   2. Installer Personnel: At least two years of experience installing fire alarm systems.
   3. Supervisor: Level III (three) or Level IV (four) certified fire alarm technician; furnish name and address.
   4. Contract maintenance office located within 50 miles of project site.
   5. Certified in Delaware as fire alarm installer.

D. Manufacturer Qualifications: Company specialized in manufacturing products specified in this section with at least three years of documented experience.

E. Maintenance Contractor Qualifications: Same entity as installer or different entity with specified qualifications.

F. Product Evaluation and Listing Organization Qualifications: Organization engaged in evaluation of products and services, including those recognized by OSHA as Nationally Recognized Testing Laboratory (NRTL), and acceptable to AHJ.

1.08 DELIVERY, STORAGE, AND HANDLING

A. See Section 01 74 19 - Construction Waste Management and Disposal for packaging waste requirements.

B. Receive, inspect, handle, and store products in accordance with manufacturer's instructions and NECA 305.

C. Handle carefully to avoid damage to internal components, enclosure, and finish.

D. Store products in manufacturer's unopened packaging, keep dry and protect from damage until ready for installation.

1.09 FIELD CONDITIONS

A. Maintain field conditions within manufacturer's required service conditions during and after installation.

B. Do not exceed maximum ambient temperature requirements for batteries at any time, which reduces battery service life. Replace batteries exposed to temperatures in excess of manufacturer's requirements.

C. Do not install or otherwise handle thermoplastic-insulated conductors at temperatures lower than 14 degrees F, unless otherwise permitted by manufacturer's instructions. When installation below this temperature is unavoidable, notify DEDC, LLC and obtain direction before proceeding with work.

D. Existing Conditions:
   1. Existing Fire Alarm System: Remove existing components indicated and incorporate new components into existing system. Comply with NFPA 70.

a. Maintain existing under warranty as if new; do not take existing portions of system out of service until new portions are fully operational, tested, and connected.

2. On-Premises Supervising Station: Include modifications necessary to existing supervising station to accommodate new fire alarm work.
3. Modifications to Existing System:
   a. Remove inactive or abandoned cables and components from existing fire alarm system.
   b. Remove unused existing components and materials from site and dispose according to local and federal requirements.

1.10 WARRANTY

A. See Section 01 78 00 - Closeout Submittals for additional warranty requirements.

B. Fire Alarm Control Units and Accessory Equipment: Provide minimum 3-year manufacturer warranty covering repair or replacement due to defective materials or workmanship.

C. Fire Alarm Manual Pull Stations: Provide minimum 3-year manufacturer warranty covering repair or replacement due to defective materials or workmanship.

D. Fire Alarm System Notification Appliances: Provide minimum 3-year year manufacturer warranty covering repair or replacement due to defective materials or workmanship.

PART 2 PRODUCTS

2.01 FIRE ALARM SYSTEM

A. General Requirements:
   1. Provide modifications and extensions to existing fire alarm system complying with NFPA 70, NFPA 72, NFPA 90A, and consisting of required equipment, conduit, cabinets, outlet boxes, wiring, connectors, hardware, supports, accessories, components, software, and system programming as necessary for complete operating system that provides functional intent indicated.
   2. Comply with the following; where requirements conflict, order of precedence of requirements is as listed:
      a. 36 CFR 1191 and ADA Standards.
      b. ICC A117.1
      c. Requirements of AHJ.
      d. Applicable local codes.
      e. Contract Documents.
      f. NFPA 72; "should" is mandatory; where conflicts between requirements require deviation, identify deviations clearly on design documents.
   3. Fire Alarm System Products:
      a. Listed, classified, and labeled as suitable for purpose intended.
      b. Installation Environments: Provide products suitable for their respective indoor applications.
   4. Provide fire alarm circuits in accordance with NFPA 70.
      a. Comply with methods of interconnecting FACUs in accordance with NFPA 72 and NFPA 70.
      b. Power Sources:
         1) Comply with requirements for power supplies of emergency systems in accordance with NFPA 70.
         2) Primary: Dedicated branch circuits from facility power distribution system.
         3) Secondary: Storage batteries with capacity to operate system for period specified by NFPA 72.
            (a) Rechargeable Batteries: Listed and recognized by OSHA and acceptable to AHJ.
      c. Wiring and Wiring Methods:

1) General Requirements:
   (a) Comply with requirements for wiring and wiring methods in accordance with NFPA 70.
   (b) Conductors and Cables Installed Exposed in Spaces Used for Environmental Air (only where specifically permitted): Plenum-rated, listed and labeled as suitable for use in return air plenums.
   (c) Special Occupancies: Comply with NFPA 70.
   (d) Comply with NFPA 70 for wire and cable plenum, riser, general-purpose, limited-use, undercarpet, and underground applications.
2) Fire Alarm Circuits:
   (a) Comply with NFPA 70 for conditions and types required for multiconductor cable systems.
   (b) Non-Power-Limited Fire Alarm (NPLFA) Circuits:
      (1) Provide dedicated NPLFA non-GFCI branch circuits for fire alarm equipment and marked by red identification in accordance with NFPA 70.
   (c) Power-Limited Fire Alarm (PLFA) Circuits:
      (1) Provide identification for PLFA circuits in accordance with NFPA 70.

5. Provide pathway class designations and pathway survivability, as defined in NFPA 72.
   a. Provide monitoring of conductors and other signaling channels for integrity and circuit performance.
   b. Pathway Class Designations:
      1) Unless otherwise indicated or required, pathways to meet the following requirements:
         (a) SLCs: Class B (star, tee-tap, multi-tap, with no return).
         (b) IDCs: Class B (daisy-chain with EoL resistor device installed at end of circuit).
         (c) NACs: Class B (daisy-chain with EoL resistor device installed at end of circuit).
   c. Pathway Survivability:
      1) Unless otherwise indicated or required, pathways to meet requirements for Pathway Survivability Level 1 (nonrated cable installed in metal raceway, building protected by automatic sprinkler system).

B. Fire Alarm System Interfaces and Control Functions:
   1. UL 864 listed unless otherwise indicated.
   2. Descriptions below are intended to provide means for interface. See project SOOs, narrative, and input/output matrix for execution requirements.
   3. Provide initiating devices, interfaces, and control functions for emergency control function interfaces in accordance with NFPA 72.
   4. Provide monitoring of interconnected systems. Coordinate notification appliance alternate markings as indicated on drawings.
   5. Electrically Locked Doors:
      a. Comply with NFPA 72, building code, and life safety code requirements for electrically locked doors.
      b. Door Release:
         1) Provide output signal for release of electrically locked doors via addressable relay module and power isolation relay.
         2) Provide connection to UL 864 listed control system interface or interface with door control power where interruption of control power releases doors.
         3) Activate door release as determined by AHJ and in accordance with NFPA 72.
            (a) Egress Doors: Unlock upon activation of any alarm initiating device or suppression system in smoke zone that doors serve as egress from.

c. Lock Power Supplies: Provide independent power supplies.

6. Lighting/Dimming Control Systems:
   a. System Override:
      1) Provide output signal to override lighting/dimming controls via addressable relay module and power isolation relay.
      2) Provide connection to UL 864 listed control system interface or interface with system control power where interruption of control power overrides system.
      3) System override activated by building fire alarm event.

2.02 FIRE ALARM CONTROL UNITS AND RELATED EQUIPMENT

A. Fire Alarm Control Unit (FACU): Addressable.
   1. Provide NAC expansion as required.

B. Notification Appliance Circuit Expansion:
   1. Where notification appliance circuit requirements exceed capacity of FACU, provide accessories and cabinets as required for expansion.

C. Addressable Interface Modules:
   1. General Requirements:
      a. Provide addressable modules suitable for connection to FACU SLCs.
      b. Unless otherwise indicated, use addressable modules only in clean, dry, indoor, nonhazardous locations.
   2. Addressable Monitor Modules: Unless devices are explicitly permitted connected together on one zone; provide separate addressable monitor module for each conventional dry-contact input device in order to be individually identifiable by addressable FACU.
   3. Addressable Analog Input Modules: Provide as indicated or as required for monitoring and transmitting status signals from devices to FACU.
   4. Addressable Relay Modules:
      a. Provide as indicated or as required to perform necessary functions via dry-contact interface.
      b. Where load exceeds module contact rating, provide accessory power isolation relays suitable for load as required.

2.03 FIRE ALARM SYSTEM INITIATING DEVICES

A. Manufacturers:
   1. EST: www.edwardsfiresafety.com/#sle.
   2. Notifier: www.securityandfire.honeywell.com/notifier/#sle.
   3. Siemens Industry: www.siemens.com/#sle.
   4. Simplex: www.simplexfire.com/#sle.
   5. Substitutions: See Section 01 60 00 - Product Requirements.
   6. Source Limitations: Furnish initiating devices produced by same manufacturer as FACUs where possible.

B. General Requirements:
   1. Addressable Systems:
      a. Addressable Devices: Individually identifiable by addressable FACU; suitable for connection to FACU SLCs.
      b. Conventional/Nonaddressable Devices: Provide addressable interface modules as indicated or as required for connection to addressable FACU. Unless devices are explicitly permitted to be connected together as one zone, provide separate addressable monitoring point for each device in order to be individually identifiable by addressable FACU.
   2. Provide devices and associated accessories suitable for intended application and location to be installed. Unless otherwise indicated, use addressable devices and addressable interface modules only in clean, dry, indoor, nonhazardous locations.

3. Surface-Mounted Devices: Provide manufacturer's accessory surface mount backboxes or suitable outlet/device box.

C. Manual Fire Alarm Boxes/Pull Stations:
1. Description: Noncoded manual signaling boxes listed and labeled as complying with UL 38.
2. Alarm Initiation: Configured for general alarm initiation unless otherwise indicated; presignal stations (where indicated) require use of key to initiate general alarm.
3. Operation: Dual-action unless otherwise indicated or required.
   a. Dual-Action Operation: First requires pushing, pulling, or lifting, then pulling of lever.
4. Color: Red, in accordance with NFPA 72.
5. Station Reset: Requires use of key or tool.

2.04 FIRE ALARM SYSTEM NOTIFICATION APPLIANCES

A. Manufacturers:
1. EST: www.edwardsfiresafety.com/#sle.
2. Notifier: www.securityandfire.honeywell.com/notifier/#sle.
3. Siemens Industry; ACEND: www.siemens.com/#sle.
4. Simplex: www.simplexfire.com/#sle.
5. Substitutions: See Section 01 60 00 - Product Requirements.
6. Source Limitations: Furnish notification appliances produced by same manufacturer as FACUs where possible.

B. General Requirements:
1. Provide signaling notification appliances listed for fire-protective service and intended operating mode, public or private; suitable for connection to FACU notification appliance circuits.
2. Provide notification appliances and associated accessories suitable for intended application and location to be installed. Use notification appliances only according to listed mounting (e.g. ceiling, wall).
3. Concealed Notification Appliances:
   a. Upon activation from fire alarm system, expose device for operation; return to concealed position upon system deactivation; motor-driven.
   b. Provide door position monitoring system for remote indication of concealed and exposed positions.
4. Notification Appliance Derating: Include device derating adjustments in accordance with listing where applicable, including the following.
   a. Where accessory protective guards or enclosures are utilized.
   b. Where required by field conditions (e.g., ambient temperature and sound).
5. Notification Appliance Color:
   a. Wall-Mounted: Red.

C. Visible Notification Appliances:
1. Public Mode Operation: Listed and labeled as complying with UL 1971.
2. Strobes: Clear or nominal white lens with flash rate of 1 Hz unless otherwise indicated or required; xenon or LED light source with maximum pulse duration of 0.02 seconds; candela rating as indicated.

D. Audible Notification Appliances:
1. Listed and labeled as complying with UL 464.
2. Rated Sound Pressure Level: As required to achieve design sound pressure levels, but not less than 75 dBA at 10 feet for public mode operation or 45 dBA at 10 feet for private mode operation in accordance with UL 464.
3. Horns: Selectable tone, including at minimum NFPA 72 temporal 3 pattern and continuous; minimum of two selectable volume levels.

E. Combination Notification Appliances: Comply with respective requirements for each signaling method.

2.05 WIRE AND CABLE

A. General Requirements:
   1. Comply with NFPA 70 listing and marking requirements for cables.
   2. Substitution of fire alarm listed cables for communication wiring, in accordance with NFPA 70, is not permitted.
   3. Provide cables as indicated or as required for connections between system components.

B. Power-Limited Fire Alarm Cables (PLFA):
   1. Comply with applications of listed cables in accordance with Chapter 7 of NFPA 70.
      a. Fire alarm cable substitutions in accordance with NFPA 70: Not permitted.

C. Non-Power-Limited Fire Alarm Cables (NPLFA):
   1. Comply with NPLFA circuit conductor properties in accordance with NFPA 72.
   2. Comply with listing requirements in Chapter 7 of NFPA 70.

2.06 ACCESSORIES

A. Provide components as indicated or as required for connection of fire alarm system to devices and other systems indicated.

B. Provide EoL resistors as required for wiring supervision.

C. Framed Passive Graphic Maps:
   1. Provide passive graphic maps, size as indicated or as required by AHJ.
   2. Identify information required by AHJ, including the following:
      a. Location of FACUs and remote annunciators.
      b. Current location, labeled "YOU ARE HERE."
      c. North reference.
   3. Utilize nomenclature consistent with FACU programming and device identification labels.
   4. Provide concealed mounting hardware.

D. Surge Protection:
   1. Line Voltage Surge Protection:
      a. Provide for each line voltage circuit serving fire alarm system control units and related equipment (e.g., FACU, field booster panels, nodes, and transponders).
      b. Listed and labeled as complying with UL 1449.

PART 3 EXECUTION

3.01 EXAMINATION

A. Verify field measurements.

B. Verify that system capacities listed in manufacturer instructions align with designed system.

C. Verify that mounting surfaces are ready to accept components and equipment, with suitable support frames and anchors installed where required.

D. Verify ratings, configurations, and characteristics of system components.

E. Verify rough-ins for field connections.

F. Verify that work likely to damage fire alarm system has been completed.

G. Verify that interior of building has been protected from weather.

H. Perform preinstallation tests and inspections per manufacturer's instructions and in accordance with NECA 305.

I. Verify that system bonding is in accordance with Section 26 05 26.

J. Do not energize system until deficiencies have been corrected.

K. Verify that branch circuit wiring installation is completed, tested, and ready for connection to fire alarm system. Overcurrent protection ratings are consistent with circuit voltage and manufacturer's recommendations and nameplate data for equipment.

3.02 PREPARATION

A. Prior to installation, confirm environment of installation area is clean, and with ambient temperature, humidity, and ventilation requirements are per manufacturer's written instructions.
   1. Clean and vacuum in accordance with manufacturer's written instructions. Confirm equipment ventilation holes are absent of obstructions and free for air flow.
   2. Clean pathways thoroughly to remove foreign materials before installing conductors and cables.
   3. Clean dirt, debris, plaster, and other foreign materials from equipment enclosures, cabinets, and outlet boxes.
   4. Clean surfaces to receive adhesive products according to manufacturer's instructions.

B. Follow tool requirements for installation, including torquing adjustments, as listed in manufacturer documentation.

C. Remove detector dust covers prior to system energization.

3.03 INSTALLATION

A. Install field-devices, components, FACU and related equipment, and accessories in accordance with the following:
   1. Manufacturer's instructions, applicable codes, and Contract Documents.
   2. NECA 1.
   3. NECA 305.
   4. NFPA 72.
   5. NFPA 70; including requirements for mechanical execution of work.

B. Field Locations:
   1. Obtain State of Delaware OMB - Division of Facilities Management's approval of locations of devices and notification appliances before installation.
   2. Arrange equipment to provide minimum operational clearances and required maintenance access in accordance with manufacturer's instructions and NFPA 70.
   3. Conceal wiring, conduit, outlet boxes, and supports where installed in finished areas; maintain code-required access.

C. Raceways and Supports:
   1. Coordinate locations of outlet boxes as required for installation. Only install boxes and equipment at locations based on application standards indicated in NFPA 72.
      a. See Section 26 05 33.16.
   2. Secure and support raceways at intervals complying with NFPA 70. Provide supports where vertical rise exceeds permissible limits.
      a. See Section 26 05 29.
   3. Install firestopping to preserve fire resistance rating of partitions and other elements.
      a. See Section 07 84 00.

D. Wiring and Connections:
   1. Maintain separation of Class 1, Class 2, Class 3 remote-control, signaling, fire alarm circuits, and power-limited circuits in accordance with cable insulation class and NFPA 70.
   2. Maintain circuit pathway and class designations in accordance with NFPA 72 for configuration, separation, and survivability.
   3. Comply with permitted and not permitted installations for wires, cables, cable routing assemblies, communications circuits, and fire alarm circuits in accordance with NFPA 70.
   4. Secure and support conductors and cables in accordance with NFPA 70 using suitable supports and methods approved by AHJ. Provide independent support from building

structure and suspended ceiling systems. Do not provide support from raceways, piping, ductwork, or other systems.

5. Provide grounding and bonding in accordance with Section 26 05 26.
6. Comply with manufacturer's minimum cable sizes or ratings.
7. Do not exceed manufacturer's recommended maximum power, signal, or network cable lengths between components.
8. Provide network wiring in accordance with NFPA 70.
9. Neatly train and bundle conductors inside boxes, wireways, and cabinets.
10. See manufacturer's instructions for batteries.

E. Fire Alarm System Components:
1. Install field-installed devices, components, relays, notification appliances, accessories, and when applicable EoL resistors.
   a. Install wiring to supervisory devices and associated EoL resistors as required for supervision of hardwired connections
2. Install Wall-Mounted Equipment: Assemble component hardware within (e.g., card bays, sub-bays, expansion bays, signal cards, other card frames, networking, signal transmission, application modules, tamper monitoring devices, interconnecting modules, and auxiliary power supplies), including space for required spare capacity, and configure settings.
3. Install Interconnect Wiring: Connect system cabinets, install processor and cards, cabling, connectors, terminations, and bonding.

F. Branch Power:
1. After installation confirmations, follow manufacturer instructions to connect branch circuit power cables to premises fire alarm system components; comply with NFPA 70.
2. Where accessories require auxiliary power, provide control power source and monitoring as indicated or as required to complete installation.
3. Install auxiliary power supplies, including indicated monitoring, and connections necessary for remote equipment.

G. System Identification:
1. Identify devices, notification appliances, components, cables, and equipment in accordance with approved submittals. See Section 26 05 53.
2. Confirm fire alarm system programming meets requirements of SOO and sub-system SOOs.
3. Mark location of disconnecting means for NPFLA circuits.
4. Coordinate to provide red branch power circuit protective devices or identify them accordingly as required by NFPA 72 and NFPA 70.
5. Mark date of batteries installed on inside cover of panels and formal maintenance logs.

H. Troubleshooting and Installer Checks:
1. Field test connectivity periodically during installation process to avoid unexpected troubleshooting.
2. Check system operation for notification, FACU functions, circuit supervision, alarm initiating devices, supervisory initiating devices, dress panels/doors/covers, and programming before performing field tests.

I. Fire Alarm System Tests:
1. Perform required tests of NFPA 72. Record measured values during operational checks.
2. Confirm functional testing of fire alarm system is as indicated in Contract Documents.

3.04 FIELD QUALITY CONTROL

A. See Section 01 40 00 - Quality Requirements for additional requirements.

B. Provide services of manufacturer's authorized representation to observe installation and assist in inspection, testing, and adjusting. Include manufacturer's detailed testing procedures and field reports and with submittals.

C. Provide equipment, two-way radios for testing personnel use, tools, and supplies required to accomplish inspection and testing.

D. Notify State of Delaware OMB - Division of Facilities Management and DEDC, LLC at least two weeks prior to scheduled inspections and tests.

E. Inspect and test in accordance with manufacturer's instructions.

F. Inspect wiring and components for damage and defects.

G. Batteries and Power Supplies: Perform inspections and tests listed in manufacturer installation instructions.

H. Perform additional requirements related to testing and inspection during system startup.

I. Test for interface with other systems.

J. Test shunt trips to verify operation.

K. Correct defective work, adjust for operation, and retest until entire system complies with Contract Documents.

L. Submit detailed reports indicated inspection and testing results, corrective actions taken, and as-found and final adjusted settings.

3.05 ADJUSTING

A. Adjust tightness of mechanical and electrical connections to manufacturer's recommended torque settings.

B. Adjust initiating device and notification appliance settings to achieve desired operation as indicated in submittals.

C. Measure power supply primary and secondary voltages, log values for records, and make appropriate adjustments.

D. Adjust alignment of equipment covers and doors. Provide keys and spare keys to State of Delaware OMB - Division of Facilities Management.

E. Reprint and reinstall damaged or misinstalled labels; maintain neat and square to installed location good workmanship - see NECA 1; maintain consistent placements for identification on products of similar type.

F. Adjust devices or notification appliances and associated bases to be flush and level.

G. Program system parameters according to requirements of State of Delaware OMB - Division of Facilities Management.

3.06 CLEANING

A. See Section 01 70 00 - Execution and Closeout Requirements for additional requirements.

B. See Section 01 74 19 - Construction Waste Management and Disposal for field-generated construction waste requirements.

C. Check tightness of electrical connections. Replace damaged components and provide closure plates for vacant positions. Provide circuit directory updates for related power branch circuits.

D. Clean and repair existing materials and equipment that remain or are indicated for reuse.

E. Clean dirt, debris, plaster, and other foreign materials from outlet boxes and fire alarm system equipment and components.

F. Clean fire alarm system equipment and components according to manufacturer's instructions and NECA 305.

G. Clean surfaces and interiors of boxes and device cover plates in accordance with manufacturer's instructions to remove dirt, fingerprints, debris, plaster, and other foreign materials.

H. Repair scratched or marred exposed surfaces to match original factory finish.

I. Comply with federal (EPA), state, and local regulations for battery handling and disposal. Do not spill battery fluids down plumbing drains. Only use containers safe for transportation marked 'nonspillable.'

3.07 INSPECTION AND TESTING FOR COMPLETION

A. Notify State of Delaware OMB - Division of Facilities Management 7 days prior to beginning completion inspections and tests.

B. Notify AHJ and comply with their requirements for scheduling inspections and tests and for observation by their personnel.

C. Provide services of installer's supervisor or person with equivalent qualifications to supervise inspection and testing, correction, and adjustments.

D. Prepare for testing by ensuring that work is complete and correct; perform preliminary tests as required.

E. Provide tools, software, and supplies required to accomplish inspection, testing, and document results.

F. Perform inspection and testing in accordance with NFPA 72 and requirements of AHJ; document each inspection and test.

G. Correct defective work, adjust for operation, and retest until entire system complies with Contract Documents.

H. Diagnostic Period: After successful completion of inspections and tests, operate system in normal mode for at least 14 days without system or equipment malfunctions.
   1. Record system operations and malfunctions.
   2. If malfunction occurs, start diagnostic period over after correction of malfunction.
   3. State of Delaware OMB - Division of Facilities Management will provide attendant operator personnel during diagnostic period; schedule training to allow State of Delaware OMB - Division of Facilities Management personnel to perform normal duties.
   4. At end of successful diagnostic period, fill out and submit NFPA 72 "Inspection and Testing Form."

3.08 STATE OF DELAWARE OMB - DIVISION OF FACILITIES MANAGEMENT PERSONNEL INSTRUCTION

A. Provide the following instruction to designated State of Delaware OMB - Division of Facilities Management personnel:
   1. Hands-On Instruction: On-site, using operational system.
   2. Classroom Instruction: State of Delaware OMB - Division of Facilities Management furnished classroom, on-site or at other local facility.

B. Administrative: One-hour session(s) covering issues necessary for nontechnical administrative staff; classroom:
   1. Initial Training: One session precloseout.

C. Basic Operation: One-hour sessions for attendant personnel, security officers, and engineering staff; combination of classroom and hands-on:
   1. Initial Training: One session precloseout.

D. Use operation and maintenance documentation as primary instruction material; have paper copies available for attendees and supplement training material aids.

3.09 CLOSEOUT ACTIVITIES

A. See Section 01 78 00 - Closeout Submittals for additional submittals.

B. See Section 01 79 00 - Demonstration and Training for additional requirements.

C. Closeout Demonstration: Demonstrate operation of all functions to State of Delaware OMB - Division of Facilities Management.
   1. Be prepared to conduct any of required tests.
   2. Have minimum one copy of operation and maintenance data, preliminary copy of project record drawings, input/output matrix, and operator instruction chart(s) available during demonstration.
   3. Have authorized technical representative of FACU manufacturer present during demonstration.
   4. Demonstration may be combined with inspection and testing required by AHJ; notify AHJ with enough time to schedule demonstration.
   5. Repeat demonstration until successful.

D. Substantial Completion of project cannot be achieved until inspection and testing is successful and the following:
   1. Specified diagnostic period without malfunction has been completed.
   2. Approved operating and maintenance data has been delivered.
   3. Spare parts, extra materials, and tools have been delivered.
   4. All aspects of operation have been demonstrated to State of Delaware OMB - Division of Facilities Management.
   5. Final acceptance of fire alarm system has been given by AHJ.
   6. Specified precloseout instruction is complete.

3.10 PROTECTION

A. Protect installed fire alarm system from subsequent construction operations.

END OF SECTION