The School District of Haverford Township Additions and Renovations to Coopertown Elementary School

VOLUME 2
DIVISIONS 2 through 14
DIVISIONS 31 through 33
TECHNICAL SPECIFICATIONS

CRA PROJECT NO. 3758

March 10, 2025

Crabtree, Rohrbaugh & Associates - Architects
401 East Winding Hill Road, Mechanicsburg, PA 17055
www.cra-architects.com
P: 717.458.0272
Maryland • Pennsylvania • Virginia • West Virginia

VOLUME 2

TECHNICAL SPECIFICATIONS

FOR

ADDITIONS AND RENOVATIONS TO COOPERTOWN ELEMENTARY SCHOOL

FOR THE

THE SCHOOL DISTRICT OF HAVERFORD TOWNSHIP
50 East Eagle Road
Havertown, PA 19083

CRABTREE, ROHRBAUGH & ASSOCIATES
ARCHITECTS
401 East Winding Hill Road
Mechanicsburg, Pennsylvania 17055

ARCHITECT'S PROJECT NO. 3758

SECTION 024119 - SELECTIVE DEMOLITION

PART 1 - GENERAL

1.1 RELATED DOCUMENTS

A. Drawings and general provisions of the Contract, including General and Supplementary Conditions and other Division 1 Specification Sections, apply to this Section.

1.2 SUMMARY

A. This Section includes the following:

1. Demolition and removal of selected portions of a building or structure.
2. Salvage of existing items to be reused or recycled.

B. Related Sections include the following:

1. Division 1 Section "Summary of Work" for use of premises, and phasing, and Owner-occupancy requirements.
2. Division 1 Section "Temporary Facilities & Controls" for temporary utilities, temporary construction and support facilities, temporary security and protection facilities and environmental-protection measures for selective demolition operations.
3. Division 1 Section "Cutting and Patching" for cutting and patching procedures for selective demolition operations.
4. Divisions 23 and 26 for demolishing, cutting, patching, or relocating mechanical and electrical items.

1.3 DEFINITIONS

A. Remove: Detach items from existing construction and legally dispose of them off-site, unless indicated to be removed and salvaged or removed and reinstalled.

B. Remove and Salvage: Detach items from existing construction and deliver them to the Owner ready for reuse.

C. Remove and Reinstall: Detach items from existing construction, prepare them for reuse, and reinstall them where indicated.

D. Existing to Remain: Existing items of construction that are not to be removed and that are not otherwise indicated to be removed, removed and salvaged, or removed and reinstalled.

1.4 MATERIALS OWNERSHIP

A. Historic items, relics, and similar objects including, but not limited to, cornerstones and their contents, commemorative plaques and tablets, antiques, and other items of interest or value to the Owner that may be encountered during selective demolition remain the Owner's property. Carefully remove and salvage each item or object in a manner to prevent damage and deliver promptly to the Owner.

1. Before demolition and throughout construction, all Prime Contractors shall be responsible to review with the Owner's, all items being removed by their trades. All items designated during this review to remain the Owner's property, shall be maintained in good condition and turned over to the Owner.

1.5 SUBMITTALS

A. Qualification Data: For Contractor.

B. Schedule of Selective Demolition Activities: Indicate the following:

1. Detailed sequence of selective demolition and removal work, with starting and ending dates for each activity. Ensure Owner's on-site operations are uninterrupted.
2. Interruption of utility services. Indicate how long utility services will be interrupted.
3. Coordination for shutoff, capping, and continuation of utility services.
4. Locations of proposed dust and noise-control temporary partitions and means of egress.
5. Coordination of Owner's continuing occupancy of portions of existing building and of Owner's partial occupancy of completed Work.
6. Means of protection for items to remain and items in path of waste removal from the building.
7. Use of elevators and stairs.

Inventory: After selective demolition is complete, submit a list of items that have been removed and salvaged.

C. Pre-demolition Photographs or Recordings: Show existing conditions of adjoining construction and site improvements, including finish surfaces, that might be misconstrued as damage caused by selective demolition operations. Submit before Work begins.

D. Landfill Records: Indicate receipt and acceptance of hazardous wastes by a landfill facility licensed to accept hazardous wastes.

1.6 QUALITY ASSURANCE

A. Demolition Firm Qualifications: An experienced firm that specializes in demolition work similar in material and extent to that indicated for this Project.

B. Refrigerant Recovery Technician Qualifications: Certified by an EPA-approved certification program.

C. Regulatory Requirements: Comply with governing EPA notification regulations before beginning selective demolition. Comply with hauling and disposal regulations of authorities having jurisdiction.

D. Standards: Comply with ANSI A10.6 and NFPA 241.

E. Pre-demolition Conference: Conduct conference at Project site to comply with requirements in Division 1 Section "Project Meetings." Review methods and procedures related to selective demolition including, but not limited to, the following:

1. Inspect and discuss condition of construction to be selectively demolished.
2. Review structural load limitations of existing structure.
3. Review and finalize selective demolition schedule and verify availability of materials, demolition personnel, equipment, and facilities needed to make progress and avoid delays.
4. Review requirements of work performed by other trades that rely on substrates exposed by selective demolition operations.
5. Review areas where existing construction is to remain and requires protection.

1.7 PROJECT CONDITIONS

A. The Owner will occupy portions of the building immediately adjacent to the selective demolition area. Conduct selective demolition so Owner's operations will not be disrupted.

1. Comply with requirements specified in Division 1 Section "Summary of Work."

B. Conditions existing at the time of inspection for bidding purposes will be maintained by the Owner as far as is practical.

1. Before selective demolition, the Owner will remove the following items:

a. School District will clear occupied spaces prior to selective demolition of items that the school district wishes to maintain. Contractors shall provide adequate notice to owner, prior to selective demolition for planning and coordination.

C. Hazardous Materials: It is not expected that hazardous materials will be encountered in the Work.

1. If materials suspected of containing hazardous materials are encountered, do not disturb; immediately notify the Architect and Owner. The Owner will remove the hazardous materials under a separate contract, or request a proposal to remove the hazardous materials.

D. Storage or sale of removed items or materials on-site is not permitted.

E. Utility Service: Maintain existing utilities indicated to remain in service and protect them against damage during selective demolition operations.

1. Maintain fire-protection facilities in service during selective demolition operations.

F. All Contractors shall be responsible for verification of all existing building dimensions and conditions, including finishes and materials, systems shown and designated as existing on the Contract Drawings prior to starting demolition and construction. Any discrepancies in information indicated on the Contract drawings shall be directed in writing to the attention of the Architect prior to the start of demolition and construction. Verification of clearances required for all new equipment, piping, ductwork and related components shall be the Contractor's responsibility.

G. All Contractors shall patch, repair or replace all existing finishes and materials disturbed or damaged during demolition. All repair or replacement shall match adjacent existing and/or new finishes and materials as indicated.

H. See Architectural, Structural, Mechanical, Electrical and Plumbing drawings for demolition work required. Coordinate all Work by other Contractors, including, but not limited to, capping and disconnection of building services.

I. Existing conditions as appear in these Contract Documents may vary with actual conditions because of undocumented work performed by Owner's staff and by other contractors.

J. All Contractors shall be responsible for verification of all demolition conditions related to accepted Alternate bids, including finishes and materials, systems shown and designated as existing or new on the Contract Drawings prior to starting of demolition and construction. Any discrepancies in information indicated on the Contract Drawings shall be directed in writing to the attention of Architect prior to starting demolition and construction.

1.8 WARRANTY

A. Existing Warranties: Remove, replace, patch, and repair materials and surfaces cut or damaged during selective demolition, by methods and with materials so as not to void existing warranties.

PART 2 - PRODUCTS (Not Used)

PART 3 - EXECUTION

3.1 EXAMINATION

A. Verify that utilities have been disconnected and capped.

B. Survey existing conditions and correlate with requirements indicated to determine the extent of selective demolition required.

C. Inventory and record the condition of items to be removed and reinstalled and items to be removed and salvaged.

D. When unanticipated mechanical, electrical, or structural elements that conflict with the intended function or design are encountered, investigate and measure the nature and extent of the conflict. Promptly submit a written report to the Architect.

E. Engage a professional engineer to survey the condition of the building to determine whether removing any element might result in structural deficiency or unplanned collapse of any portion of structure or adjacent structures during selective demolition operations.

F. Survey of Existing Conditions: Record existing conditions by use of measured drawings, preconstruction photographs, or preconstruction videotapes.

1. Before selective demolition or removal of existing building elements that will be reproduced or duplicated in final Work, make permanent record of measurements, materials, and construction details required to make exact reproductions.

G. Perform surveys as the Work progresses to detect hazards resulting from selective demolition activities.

3.2 UTILITY SERVICES AND MECHANICAL/ELECTRICAL SYSTEMS

A. Existing Services/Systems: Maintain services/systems indicated to remain and protect them against damage during selective demolition operations.

1. Comply with requirements for existing services/systems interruptions specified in Division 1 Section "Summary of Work."

B. Service/System Requirements: Locate, identify, disconnect, and seal or cap off indicated utility services and mechanical/electrical systems serving areas to be selectively demolished.

1. The Owner will arrange to shut off indicated services/systems when requested by the Contractor. The Contractor may make these arrangements if approved by the Owner.
2. Arrange to shut off indicated utilities with utility companies.
3. If services/systems are required to be removed, relocated, or abandoned, before proceeding with selective demolition, provide temporary services/systems that bypass the area of selective demolition and that maintain continuity of services/systems to other parts of building.
4. Cut off pipe or conduit in walls or partitions to be removed. Cap, valve, or plug and seal remaining portion of pipe or conduit after bypassing.

    a. Where an entire wall is to be removed, existing services/systems may be removed with removal of the wall.

3.3 PREPARATION

A. Site Access and Temporary Controls: Conduct selective demolition and debris-removal operations to ensure minimum interference with roads, streets, walks, walkways, and other adjacent occupied and used facilities.

1. Comply with requirements for access and protection specified in Division 1 Section "Temporary Facilities & Controls"

B. Temporary Facilities: Provide temporary barricades and other protection required to prevent injury to people and damage to adjacent buildings and facilities to remain.

1. Provide protection to ensure safe passage of people around selective demolition area and to and from occupied portions of building.
2. Provide temporary weather protection, during interval between selective `demolition of existing construction on exterior surfaces and new construction, to prevent water leakage and damage to structure and interior areas.
3. Protect walls, ceilings, floors, and other existing finish work that are to remain or that are exposed during selective demolition operations.
4. Cover and protect furniture, furnishings, and equipment that have not been removed.
5. Comply with requirements for temporary enclosures, dust control, heating, and cooling specified in Division 1 Section "Temporary Facilities & Controls."

C. Temporary Shoring: Provide and maintain shoring, bracing, and structural supports as required to preserve stability and prevent movement, settlement, or collapse of construction and finishes to remain, and to prevent unexpected or uncontrolled movement or collapse of construction being demolished.

1. Strengthen or add new supports when required during progress of selective demolition.

3.4 SELECTIVE DEMOLITION, GENERAL

A. General: Demolish and remove existing construction only to the extent required by new construction and as indicated. Use methods required to complete the Work within limitations of governing regulations and as follows:

1. Proceed with selective demolition systematically, from higher to lower level. Complete selective demolition operations above each floor or tier before disturbing supporting members on the next lower level.
2. Neatly cut openings and holes plumb, square, and true to dimensions required. Use cutting methods least likely to damage construction to remain or adjoining construction. Use hand tools or small power tools designed for sawing or grinding, not hammering and chopping, to minimize disturbance of adjacent surfaces. Temporarily cover openings to remain.
3. Cut or drill from the exposed or finished side into concealed surfaces to avoid marring existing finished surfaces.
4. Do not use cutting torches until work area is cleared of flammable materials. At concealed spaces, such as duct and pipe interiors, verify condition and contents of hidden space before starting flame-cutting operations. Maintain portable fire-suppression devices during flame-cutting operations.
5. Maintain adequate ventilation when using cutting torches.
6. Remove decayed, vermin-infested, or otherwise dangerous or unsuitable materials and promptly dispose of off-site.

7. Remove structural framing members and lower to ground by method suitable to avoid free fall and to prevent ground impact or dust generation.
8. Locate selective demolition equipment and remove debris and materials so as not to impose excessive loads on supporting walls, floors, or framing.
9. Dispose of demolished items and materials promptly.

B. Reuse of Building Elements: Do not demolish building elements beyond what is indicated in the Contract Documents without Architect's approval.

C. Removed and Salvaged Items:

1. Clean salvaged items.
2. Pack or crate items after cleaning. Identify contents of containers.
3. Store items in a secure area until delivery to Owner.
4. Transport items to Owner's storage area on-site.
5. Protect items from damage during storage.

D. Removed and Reinstalled Items:

1. Clean and repair items to functional condition adequate for intended reuse. Paint equipment to match new equipment.
2. Pack or crate items after cleaning and repairing. Identify contents of containers.
3. Protect items from damage during storage.
4. Reinstall items in locations indicated. Comply with installation requirements for new materials and equipment. Provide connections, supports, and miscellaneous materials necessary to make item functional for use indicated.

E. Existing Items to Remain: Protect construction indicated to remain against damage and soiling during selective demolition. When permitted by Architect, items may be removed to a suitable, protected storage location during selective demolition and reinstalled in their original locations after selective demolition operations are complete.

3.5 SELECTIVE DEMOLITION PROCEDURES FOR SPECIFIC MATERIALS

A. Concrete: Demolish in small sections. Cut concrete at junctures with construction to remain, using power-driven saw. Neatly trim openings to dimensions indicated.

B. Masonry: Demolish in small sections. Cut masonry at junctures with construction to remain, using power-driven saw, then remove masonry between saw cuts.

C. Concrete Slabs-on-Grade: Saw-cut perimeter of area to be demolished, then break up and remove.

D. Resilient Floor Coverings: Remove floor coverings and adhesive according to recommendations in RFCI-WP and its Addendum.

1. Remove residual adhesive and prepare substrate for new floor coverings by one of the methods recommended by RFCI.

E. Roofing: Remove no more existing roofing than can be covered in one day by new roofing and so that building interior remains watertight and weathertight. Refer to Division 7 Sections for new roofing requirements.

1. Remove existing roof membrane, flashings, copings, and roof accessories as indicated in the demolition and renovation notes.

F. Air-Conditioning Equipment: Remove equipment without releasing refrigerants.

G. Refer to the drawings for additional demolition work if any for each room or building component.

H. Prepare existing remaining substrates to receive new finishes as indicated on the finish schedule. Preparation of substrates shall be in conformance with the installation requirements of each new finish.

3.6 DISPOSAL OF DEMOLISHED MATERIALS

A. General: Except for items or materials indicated to be recycled, reused, salvaged, reinstalled, or otherwise indicated to remain Owner's property, remove demolished materials from Project site and legally dispose of them in an EPA-approved landfill.

1. Do not allow demolished materials to accumulate on-site.
2. Remove and transport debris in a manner that will prevent spillage on adjacent surfaces and areas.
3. Remove debris from elevated portions of building by chute, hoist, or other device that will convey debris to grade level in a controlled descent.

B. Burning: Do not burn demolished materials.

C. Disposal: Transport demolished materials off Owner's property and legally dispose of them.

3.7 CLEANING

A. Clean adjacent structures and improvements of dust, dirt, and debris caused by selective demolition operations. Return adjacent areas to condition existing before selective demolition operations began.

END OF SECTION 024119

SECTION 033000 - CAST-IN-PLACE CONCRETE

PART 1 - GENERAL

1.1 RELATED DOCUMENTS

A. Drawings and general provisions of the Contract, including General and Supplementary Conditions and Division 1 Specification Sections, apply to this Section.

1.2 SUMMARY

A. This Section specifies cast-in place concrete, including formwork, reinforcement, concrete materials, vapor barriers, mix designs, placement procedures, other accessory materials and finishes.

B. Cast-in Place concrete includes but is not limited to the following:

1. Footings and foundation walls
2. Interior slabs-on-grade
3. Masonry infill
4. Suspended slabs
5. Equipment bases and foundations
6. Fill for steel pan stair treads and landings.

C. Related Sections include the following:

1. Division 5 “Structural Steel Framing” for embedded items.
2. Division 5 “Metal Fabrications” for embedded items.
3. Division 9 Section “Wood Athletic Flooring” for required moisture, pH, and other required compatibility testing requirements.
4. Division 9 Section “Resilient Tile Flooring” for required moisture, pH, and other required compatibility testing requirements.
5. Division 9 Section “Resinous Flooring” for required moisture, pH, and other required compatibility testing requirements.
6. Division 9 Section “Tile Carpeting” for required moisture, pH, and other required compatibility testing requirements.
7. Division 31 Section “Earth Moving” for drainage fill under slabs-on grade.
8. Division 32 Section “Concrete Pavement” for exterior concrete pavement and sidewalks.
9. Division 32 Section “Concrete Paving Joint Sealants” for joint sealants to be used in exterior concrete paving.

1.3 DEFINITIONS

A. Cementitious Materials: Portland cement alone or in combination with one or more of blended hydraulic cement, fly ash and other pozzolans.

1.4 SUBMITTALS

A. Product Data: For each type of manufactured material and product indicated.

B. Design Mixes: For each concrete mix. Include alternate mix designs when characteristics of materials, project conditions, weather, test results, or other circumstances warrant adjustments.

1. If mix water is to be withheld at the plant and later added at the Project site to provide the water to cement ratio of the design mix, <u>this must be clearly indicated on EVERY delivery ticket to the Project site.</u>

C. Steel Reinforcement Shop Drawings: Details of fabrication, bending, and placement, prepared according to ACI 315, "Details and Detailing of Concrete Reinforcement". Include material, grade, bar schedules, stirrup spacing, bent bar diagrams, arrangement, and supports of concrete reinforcement.

D. Material Certificates: Signed by manufacturers certifying that each of the following items complies with requirements:

1. Cementitious materials and aggregates.
2. Steel reinforcement and reinforcement accessories.
3. Polypropylene Fiber Reinforcement
4. Admixtures.
5. Curing materials.
6. Floor and slab treatments, when required by the Drawings.
7. Vapor barriers.
8. Semi-rigid joint filler.
9. Premolded expansion joint-filler strips.
10. Repair materials, when required for repair, and use of the repair is accepted by the Architect.
11. Epoxy for drilling and placing dowels into hardened concrete.
12. Waterstops

E. Minutes of Pre-installation Conference.

1.5 QUALITY ASSURANCE

A. Installer Qualifications: An experienced installer who has completed concrete Work similar in material, design, and extent to that indicated for this Project and whose work has resulted in construction with a record of successful in-service performance.

B. Manufacturer Qualifications: A firm experienced in manufacturing ready-mixed concrete products complying with ASTM C 94 requirements for production facilities and equipment.

1. Manufacturer must use Pennsylvania Department of Transportation certified materials.

C. Testing Agency Qualifications: An independent testing agency, acceptable to authorities having jurisdiction, qualified according to ASTM C 1077 and ASTM E 329 to conduct the testing indicated, as documented according to ASTM E 548.

1. Personnel conducting field tests shall be qualified as ACI Concrete Field Testing Technician, Grade 1, according to ACI CP-1 or an equivalent certification program.
2. Refer to “Field Quality Control” Paragraph below for testing requirements.

D. Source Limitations: Obtain each type or class of cementitious material of the same brand from the same manufacturer's plant, each aggregate from one source, and each admixture from the same manufacturer.

E. Welding: Qualify procedures and personnel according to AWS D1.4, "Structural Welding Code--Reinforcing Steel”.

F. ACI Publications: Comply with the following, unless more stringent provisions are indicated:

1. ACI 301, "Specification for Structural Concrete”.
2. ACI 117, "Specifications for Tolerances for Concrete Construction and Materials”.
3. CRSI Concrete Reinforcing Steel Institute, “Manual of Standard Practice”.
4. ACI 306.1 “Standard Specification for Cold Weather Concreting”
5. ACI 305 “Hot Weather Concreting”

G. Pre-installation Conference: Conduct conference at Project site to comply with requirements in Division 1 Section "Project Meetings”.

1. Before submitting design mixes, review concrete mix design and examine procedures for ensuring quality of concrete materials. Require representatives of each entity directly concerned with cast-in-place concrete to attend, including the following:

   a. Contractor's superintendent.
   b. Independent testing agency responsible for concrete design mixes.
   c. Ready-mix concrete producer.
   d. Concrete subcontractor.

2. The Contractor’s superintendent must conduct a Pre-installation meeting with a representative of the fiber manufacturer, listed in the “Polypropylene Fiber Reinforcement” Paragraph of this specification below, to obtain technical assistance, guidance, and recommendations for mix designs and finishing practices for a fiber free finished top surface prior to placing any building slab concrete. In addition to any recommendations given by the fiber manufacturer, the Contractor shall follow the requirements of the “Finishing Floors and Slabs” Paragraph of this specification below. Any conflict between the requirements noted and recommendations of the fiber manufacturer shall specifically be brought to the Architect.

1.6 DELIVERY, STORAGE, AND HANDLING

A. Deliver, store, and handle steel reinforcement to prevent bending and damage. Store reinforcement in a manner that prevents soil, mud, debris, or oil from adhering to the bars. If for any reason soil, mud, debris, oil or other deleterious material is on a bar, it shall be removed before the bar is installed.

PART 2 - PRODUCTS

2.1 FORM-FACING MATERIALS

A. Smooth-Formed Finished Concrete: Form-facing panels that will provide continuous, true, and smooth concrete surfaces. Furnish in largest practicable sizes to minimize number of joints.

1. Plywood, metal, or other approved panel materials that produce a smooth, formed finish are acceptable.

B. Rough-Formed Finished Concrete: Plywood, lumber, metal, or another approved materials are acceptable. Provide lumber dressed on at least two edges and one side for a tight fit.

C. Chamfer Strips: Wood, metal, PVC, or rubber strips, 3/4 inch by 3/4 inch, minimum.

D. Form-Release Agent: Commercially formulated form-release agent that will not bond with, stain, or adversely affect concrete surfaces and will not impair subsequent treatments of concrete surfaces.

1. Formulate form-release agent with rust inhibitor for steel form-facing materials.

E. Form Ties: Factory-fabricated, removable or snap-off metal or glass-fiber-reinforced plastic form ties designed to resist lateral pressure of fresh concrete on forms and to prevent spalling of concrete on removal.

1. Furnish units that will leave no corrodible metal closer than 1 inch to the plane of the exposed concrete surface.
2. Furnish ties that, when removed, will leave holes not larger than 1 inch in diameter in concrete surface.
3. Furnish ties with integral water-barrier plates to walls indicated to receive dampproofing or waterproofing.

F. Forms for Cylindrical Columns, Pedestals, and Supports: Metal, glass-fiber-reinforced plastic, paper or fiber tubes that will produce surfaces with gradual or abrupt irregularities not exceeding specified formwork surface class. Provide units with sufficient wall thickness to resist plastic concrete loads without detrimental deformation.

2.2 STEEL REINFORCEMENT

A. Reinforcing Bars: ASTM A 615, Grade 60, deformed.

B. Plain-Steel Welded Wire Fabric: ASTM A 185, fabricated from as-drawn steel wire into flat sheets.

2.3 REINFORCEMENT ACCESSORIES

A. Bar Supports: Bolsters, chairs, spacers, and other devices for spacing, supporting, and fastening reinforcing bars and welded wire fabric in place. Manufacture bar supports according to CRSI's "Manual of Standard Practice" from steel wire, plastic, or precast concrete or fiber-reinforced concrete of greater compressive strength than concrete, and as follows:

1. For concrete surfaces exposed to view where legs of wire bar supports contact forms, use CRSI Class 1 plastic-protected or CRSI Class 2 stainless-steel bar supports.

B. Joint Dowel Bars: Plain-steel bars, ASTM A 615, Grade 60. Cut bars true to length with ends square and free of burrs.

2.4 CONCRETE MATERIALS

A. Portland Cement: ASTM C 150, Type I.

1. Fly Ash: Fly ash may be part of the concrete mix as follows.

a. Fly ash to be in accordance with ASTM C 618, Class C or F. Use only in concrete mixes for foundation footings, CMU wall grout fills and slabs-on-grade.

2. Ground Granulated Blast-Furnace Slag

a. Use one brand of cement throughout project unless approved otherwise by Architect.

B. Normal-Weight Aggregate: ASTM C 33, uniformly graded, and as follows:

1. Nominal Maximum Aggregate Size: One inch (3/4 inch where placement by pumping)

C. Water: Potable and complying with ASTM C 94.

2.5 ADMIXTURES

A. General: Admixtures certified by manufacturer to contain not more than 0.1 percent water-soluble chloride ions by mass of cementitious material and to be compatible with other admixtures and cementitious materials. Do not use admixtures containing calcium chloride.

B. Air-Entraining Admixture: ASTM C 260.

1. Admixture shall be certified by manufacturer to be compatible with other admixtures.

C. Water-Reducing Admixture: ASTM C 494, Type A.

1. Products: Subject to compliance with requirements, products include, but are not limited to, the following:

    a. Eucon WR-75, Euclid Chemical Co.
    b. Chemtard, ChemMasters Corp.
    c. Plastocrete, 161, Sika Corp.

D. High-Range, Water-Reducing Admixture: ASTM C 494, Type F.

1. Products: Subject to compliance with requirements, products include, but are not limited to, the following:

    a. Super P, Anti-Hydro Co., Inc.
    b. Eucon 37, Euclid Chemical Co.
    c. Superslump, Metalcrete Industries

E. Water-Reducing and Accelerating Admixture: ASTM C 494, Type E.

1. Products: Subject to compliance with requirements, products include, but are not limited to, the following:

    a. Accelguard 80, Euclid Chemical Co.
    b. Accel-Set, Metalcrete Industries
    c. Daraset, W.R. Grace & Co.

F. Water-Reducing and Retarding Admixture: ASTM C 494, Type D.

1. Products: Subject to compliance with requirements, products include, but are not limited to, the following:

    a. Eucon Retarder 75, Euclid Chemical Co.
    b. Daratard-17, W. R. Grace & Co.
    c. Plastiment, Sika Corporation

G. Moisture Vapor Reduction Admixture (MVRA): **For use only in concrete slabs-on-grade**. ASTM C 494, Type S. Non-toxic, liquid admixture that is specifically designed to have a natural chemical reaction with pre-existing elements inside the concrete to eliminate the route of moisture vapor emission through the slab by restricting the integral capillary system.

1. Basis-of-Design Product: **"**Barrier One High Performance Concrete Admixture**"** manufactured by Barrier One, Inc. Subject to compliance with requirements, additional manufacturers of acceptable products include, but are not limited to the following:

    a. ISE Logik MVRA 900.
    b. AVECS Pro-Act.

2. Warranty requirements: Product must be installed according to and in compliance with manufacturer's published data to include, but not limited to, dosing instructions, the use

of an ASTM E1745 vapor retarder installed following ASTM E1643 and ASTM F710 guidelines. MVRA manufacturer's warranty shall include:

a. Term: Life of the concrete.
b. Repair and/or removal of failed flooring.
c. Placement of a topical moisture remediation system.
d. Replacement of flooring materials to include material and labor.
e. MVRA Manufacturer shall provide an adhesion warranty to match the term of the adhesive manufacturer's warranty in accordance with the MVRA manufacturer's requirements for conveyance of such

2.6 POLYPROPYLENE FIBER REINFORCEMENT

A. Synthetic Fiber: Fibrillated or monofilament polypropylene fibers engineered and designed for use in concrete, complying with ASTM C1116, Type III, 1/2 to 2-1/4 inches long. The fibers shall be placed in the concrete at the mixing plant.

B. Available Products: Subject to compliance, provide one of the following to REPLACE welded wire fabric reinforcement in concrete slabs-on-grade:

1. Grace Strux 90/40, W.R. Grace & Company, Construction Products Division
2. Novemesh 950, SI Concrete Systems
3. Forta Ferro, Forta Corporation

2.7 VAPOR BARRIER AND GRANULAR MATERIALS

A. Vapor Barrier: ASTM E 1745, Class A, membrane that satisfies the following:

1. Membrane shall not be less than 15 mils thick.
2. Installation shall comply with the "Vapor Barrier and Granular Materials" Paragraph of this specification.
3. Products: Subject to compliance with requirements, provide one of the following:

a. Stego Industries, LLC; Stego Wrap 15-mil Class A Vapor Barrier
b. Barrier-Bac, Inc.; VB-350 16 mil Class A Vapor Retarder
c. W. R. Meadows, Inc.; Sealtight Perminator 15 mil Class A Vapor Retarder
d. Insulation Solutions Inc.; Viper VaporCheck II 15 mil Class A Vapor Barrier

B. Granular Fill: Clean mixture of crushed stone or crushed or uncrushed gravel.

2.8 CURING MATERIALS

A. Evaporation Retarder: Waterborne, monomolecular film forming, manufactured for application to fresh concrete.

B. Absorptive Cover: AASHTO M 182, Class 2, burlap cloth made from jute or kenaf, weighing approximately 9 oz./sq. yd. dry.

C. Moisture-Retaining Cover: ASTM C 171, polyethylene film or white burlap-polyethylene sheet.

D. Water: Potable.

E. Clear, Solvent-Borne, Membrane-Forming Curing Compound: ASTM C 309, Type 1, Class B.

F. Clear, Waterborne, Membrane-Forming Curing Compound: ASTM C 309, Type 1, Class B.

G. Clear, Solvent-Borne, Membrane-Forming Curing and Sealing Compound: ASTM C 1315, Type 1, Class A.

H. Clear, Waterborne, Membrane-Forming Curing and Sealing Compound: ASTM C 1315, Type 1, Class A.

I. Products: Subject to compliance with requirements, products to include, but are not limited to, the following:

1. Evaporation Retarder:

a. Cimfilm; Axim Concrete Technologies.
b. Finishing Aid Concentrate; Burke Group, LLC (The).
c. Spray-Film; ChemMasters.
d. Aquafilm; Conspec Marketing & Manufacturing Co., Inc.
e. Sure Film; Dayton Superior Corporation.
f. Eucobar; Euclid Chemical Co.
g. Vapor Aid; Kaufman Products, Inc.
h. Lambco Skin; Lambert Corporation.
i. E-Con; L&M Construction Chemicals, Inc.
j. Confilm; Master Builders, Inc.
k. Waterhold; Metalcrete Industries.
l. Rich Film; Richmond Screw Anchor Co.
m. SikaFilm; Sika Corporation.
n. Finishing Aid; Symons Corporation.
o. Certi-Vex EnvioAssist; Vexcon Chemicals, Inc.

2. Clear, Solvent-Borne, Membrane-Forming Curing Compound:

a. AH Clear Cure; Anti-Hydro International, Inc.
b. Spartan-Cote; Burke Group, LLC (The).
c. Spray-Cure & Seal 15; ChemMasters.
d. Conspec #1-15 percent solids; Conspec Marketing & Manufacturing Co., Inc.
e. Day-Chem Cure and Seal; Dayton Superior Corporation.
f. Diamond Clear; Euclid Chemical Co.
g. Nitocure S; Fosroc.
h. Lambco 120; Lambert Corporation.
i. L&M Dress & Seal 18; L&M Construction Chemicals, Inc.

j. CS-309; W. R. Meadows, Inc.
k. Seal N Kure; Metalcrete Industries.
l. Rich Seal 14 percent UV; Richmond Screw Anchor Co.
m. Kure-N-Seal; Sonneborn, Div. of ChemRex, Inc.
n. Flortec 14; Sternson Group.
o. Cure & Seal 14 percent; Symons Corporation.
p. Clear Seal 150; Tamms Industries Co., Div. of LaPorte Construction Chemicals of North America, Inc.
q. Acrylic Cure; Unitex.
r. Certi-Vex AC 309; Vexcon Chemicals, Inc.

3. Clear, Waterborne, Membrane-Forming Curing Compound:

a. AH Clear Cure WB; Anti-Hydro International, Inc.
b. Klear Kote WB II Regular; Burke Chemicals.
c. Safe-Cure & Seal 20; ChemMasters.
d. High Seal; Conspec Marketing & Manufacturing Co., Inc.
e. Safe Cure and Seal; Dayton Superior Corporation.
f. Aqua Cure VOX; Euclid Chemical Co.
g. Cure & Seal 309 Emulsion; Kaufman Products Inc.
h. Glazecote Sealer-20; Lambert Corporation.
i. Dress & Seal WB; L&M Construction Chemicals, Inc.
j. Vocomp-20; W. R. Meadows, Inc.
k. Metcure; Metalcrete Industries.
l. Cure & Seal 150E; Nox-Crete Products Group, Kinsman Corporation.
m. Rich Seal 14 percent E; Richmond Screw Anchor Co.
n. Kure-N-Seal WB; Sonneborn, Div. of ChemRex, Inc.
o. Florseal W.B.; Sternson Group.
p. Cure & Seal 14 percent E; Symons Corporation.
q. Seal Cure WB 150; Tamms Industries Co., Div. of LaPorte Construction Chemicals of North America, Inc.
r. Hydro Seal; Unitex.
s. Starseal 309; Vexcon Chemicals, Inc.

4. Clear, Solvent-Borne, Membrane-Forming Curing and Sealing Compound:

a. Spray-Cure & Seal Plus; ChemMasters.
b. UV Super Seal; Lambert Corporation.
c. Lumiseal Plus; L&M Construction Chemicals, Inc.
d. CS-309/30; W. R. Meadows, Inc.
e. Seal N Kure 30; Metalcrete Industries.
f. Rich Seal 31 percent UV; Richmond Screw Anchor Co.
g. Cure & Seal 31 percent UV; Symons Corporation.
h. Certi-Vex AC 1315; Vexcon Chemicals, Inc.

5. Clear, Waterborne, Membrane-Forming Curing and Sealing Compound:

a. Klear-Kote Cure-Sealer-Hardener, 30 percent solids; Burke Group, LLC (The).
b. Polyseal WB; ChemMasters.

c. UV Safe Seal; Lambert Corporation.
d. Lumiseal WB Plus; L&M Construction Chemicals, Inc.
e. Vocomp-30; W. R. Meadows, Inc.
f. Metcure 30; Metalcrete Industries.
g. Vexcon Starseal 1315; Vexcon Chemicals, Inc.

2.9 RELATED MATERIALS

A. Joint-Filler Strips: ASTM D 1751, asphalt-saturated cellulosic fiber.

B. Semi-rigid Joint Filler: Two-component, semi-rigid. 100 percent solids per ASTM D 2240.

C. Epoxy-Bonding Adhesive: ASTM C 881, two-component epoxy resin, capable of humid curing and bonding to damp surfaces, of class and grade to suit requirements, and as follows:

1. Type: Class IV and V, load bearing, for bonding hardened or freshly mixed concrete to hardened concrete.

D. Reglets: Fabricate reglets of not less than 0.0217-inch- thick galvanized steel sheet. Temporarily fill or cover face opening of reglet to prevent intrusion of concrete or debris.

E. Dovetail Anchor Slots: Hot-dip galvanized steel sheet, not less than 0.0336 inch thick, with bent tab anchors. Temporarily fill or cover face opening of slots to prevent intrusion of concrete or debris.

F. Waterstops: Flexible PVC waterstops for embedding in concrete to prevent passage of fluids through joints. Factory fabricate corners, intersections, and directional changes. Use profile of ribbed surface with center bulb. The waterstop is to be embedded 3 inches into concrete unless noted otherwise on drawings.

2.10 REPAIR MATERIALS

A. Repair Underlayment: Cement-based, polymer-modified, self-leveling product that can be applied in thicknesses from 1/8 inch and that can be feathered at edges to match adjacent floor elevations.

1. Cement Binder: ASTM C 150, portland cement or hydraulic or blended hydraulic cement as defined in ASTM C 219.
2. Primer: Product of underlayment manufacturer recommended for substrate, conditions, and application.
3. Aggregate: Well-graded, washed gravel, 1/8 to 1/4 inch or coarse sand as recommended by underlayment manufacturer.
4. Compressive Strength: Not less than 4,100 psi at 28 days when tested according to ASTM C 109/C 109M.
5. Repair Topping: Traffic-bearing, cement-based, polymer-modified, self-leveling product that can be applied in thicknesses from 1/4 inch.

a. Cement Binder: ASTM C 150, portland cement or hydraulic or blended hydraulic cement as defined in ASTM C 219.
b. Primer: Product of topping manufacturer recommended for substrate, conditions, and application.
c. Aggregate: Well-graded, washed gravel, 1/8 to 1/4 inch or coarse sand as recommended by topping manufacturer.
d. Compressive Strength: Not less than 5700 psi at 28 days when tested according to ASTM C 109.

2.11 CONCRETE MIXTURES, GENERAL

A. Prepare design mixes for each type and strength of concrete determined by either laboratory trial mix or field test data bases, as follows:

1. Proportion normal-weight concrete according to ACI 211.1 and ACI 301 and ACI 318-02.
2. Under circumstances where laboratory trial mix or field test data are not available, the required average compressive strength of concrete produced with materials similar to those specified shall be at least 1,200 psi greater than the specified compressive strength. This alternative shall not be permitted if the specified compressive strength is greater than 4,000 psi.

B. Use a qualified independent testing agency for preparing and reporting proposed mix designs for the laboratory trial mix basis.

C. Cementitious Materials: Limit percentage, by weight, of cementitious materials other than portland cement in concrete as follows:

1. Fly Ash: 18 percent.
2. Ground Granulated Blast-Furnace Slag: 50 percent.

D. Air Content: Add air-entraining admixture at manufacturer's prescribed rate to result in concrete at point of placement having an air content as follows within a tolerance of plus 1 or minus 1.5 percent, unless otherwise indicated:

1. Air Content: 6 percent for 3/4-inch nominal maximum aggregate size.

E. Do not air entrain concrete to trowel-finished interior floors and suspended slabs. Do not allow entrapped air content to exceed 3 percent.

F. Limit water-soluble, chloride-ion content in hardened concrete to 0.15 percent by weight of cement.

G. Admixtures: Use admixtures according to manufacturer's written instructions.

1. Use water-reducing admixture or high-range water-reducing admixture (superplasticizer) in concrete, as required, for placement and workability.
2. Use water-reducing and retarding admixture when required by high temperatures, low humidity, or other adverse placement conditions.

2.12 CONCRETE MIXTURES FOR BUILDING ELEMENTS

A. Footings and Foundation/Retaining Walls: Proportion normal-weight concrete mix as follows:

1. Minimum Compressive Strength (28 Days): 3000 psi.
2. Select slump limits from subparagraphs below or revise to suit Project.
3. Maximum Slump: 4 inches.
4. Maximum Slump for Concrete Containing High-Range Water-Reducing Admixture: 8 inches after admixture is added to concrete with 2 to 4 inch slump.

B. Interior Slabs-on-Grade: Proportion normal-weight concrete mix as follows:

1. Minimum Compressive Strength (28 Days): 3500 psi.
2. Select cementitious materials content from subparagraphs below or delete if ACI 301 default for floors is sufficient. ACI 302.1R recommends quantities in listed order below, for nominal maximum aggregate sizes 1-1/2, 1, and 3/4 inch (38, 25, and 19 mm). ACI 301 sets identical quantities, but for minimum cement rather than cementitious materials content.
3. Minimum Cementitious Materials Content: 520 lb/cu. yd.
4. Maximum Slump for Concrete Containing High-Range Water-Reducing Admixture: 8-inches after admixture is added to concrete .
5. Interior slab mix is to contain a high-range, water-reducing admixture with a water cement ratio equal to 0.47.
6. Produce a mix that has the minimum amount of water necessary to generate a 2 to 3 inch slump prior to the addition of any water reducing admixtures, as recommended in ACI 302.1R, “Concrete Floor and Slab Construction”, Chapter 6, “Concrete Properties and Consistency”.
7. Reinforce concrete with polypropylene fiber reinforcement at a dosage rate specified by fiber reinforcement manufacturer. Reinforcement to be placed in concrete at the mixing plant per fiber reinforcement manufacturer’s recommendations.
8. Per ACI 544.3, mix designs for concrete containing fiber reinforcement shall include a maximum 55% by volume course aggregate content by total volume of aggregates (sand and stone).

C. Suspended Slabs: Proportion normal-weight concrete mix as follows:

1. Minimum Compressive Strength (28 Days): 3500 psi.
2. Minimum Cementitious Materials Content: 520 lb/cu. yd.
3. Maximum Slump for Concrete Containing High-Range Water-Reducing Admixture: 8-inches after admixture is added to concrete .
4. Interior slab mix is to contain a high-range, water-reducing admixture with a water cement ratio equal to 0.47.
5. Produce a mix that has the minimum amount of water necessary to generate a 2 to 3 inch slump prior to the addition of any water reducing admixtures, as recommended in ACI 302.1R, “Concrete Floor and Slab Construction”, Chapter 6, “Concrete Properties and Consistency”
6. Reinforce concrete with welded wire fabric per contract documents and supported per Paragraph 3.5.E. The use of polypropylene fiber reinforcement is not allowed without the permission of the Engineer-Of-Record.

D. Exterior Slabs-on-Grade and Sidewalks: See Division 32 Section “Concrete Pavement.”

2.13 FABRICATING REINFORCEMENT

A. Fabricate steel reinforcement according to CRSI's "Manual of Standard Practice”.

2.14 CONCRETE MIXING

A. Ready-Mixed Concrete: Measure, batch, mix, and deliver concrete according to ASTM C 94 and ASTM C 1116, and furnish batch ticket information for EACH delivery to the Project site.

1. When air temperature is between 85 and 90 deg. F, reduce mixing and delivery time from 1-1/2 hours to 75 minutes; when air temperature is above 90 deg F, reduce mixing and delivery time to 60 minutes.

PART 3 - EXECUTION

3.1 FORMWORK

A. Design, erect, shore, brace, and maintain formwork, according to ACI 301, to support vertical, lateral, static, and dynamic loads, and construction loads that might be applied, until concrete structure can support such loads.

B. Construct formwork so concrete members and structures are of size, shape, alignment, elevation, and position indicated, within tolerance limits of ACI 117.

C. Limit concrete surface irregularities, designated by ACI 347R as abrupt or gradual, as follows:

1. Class A, 1/8 inch for concrete exposed to view.
2. Class B, 1/4 inch for all other concrete surfaces.

D. Fabricate forms for easy removal without hammering or prying against concrete surfaces. Provide crush or wrecking plates where stripping may damage cast concrete surfaces. Provide top forms for inclined surfaces steeper than 1.5 horizontal to 1 vertical. Kerf wood inserts for forming keyways, reglets, recesses, and the like, for easy removal.

1. Do not use rust-stained steel form-facing material.

E. Set edge forms, bulkheads, and intermediate screed strips for slabs to achieve required elevations and slopes in finished concrete surfaces. Provide and secure units to support screed strips; use strike-off templates or compacting-type screeds.

F. Provide temporary openings for cleanouts and inspection ports where interior area of formwork is inaccessible. Close openings with panels tightly fitted to forms and securely braced to prevent loss of concrete mortar. Locate temporary openings in forms at inconspicuous locations.

G. Chamfer exterior corners and edges of permanently exposed concrete.

H. Form openings, chases, offsets, sinkages, keyways, reglets, blocking, screeds, and bulkheads required in the Work. Determine sizes and locations from trades providing such items.

I. Clean forms and adjacent surfaces to receive concrete. Remove chips, wood, sawdust, dirt, and other debris just before placing concrete.

J. Retighten forms and bracing before placing concrete, as required, to prevent mortar leaks and maintain proper alignment.

K. Coat contact surfaces of forms with form-release agent, according to manufacturer's written instructions, before placing reinforcement.

3.2 EMBEDDED ITEMS

A. Place and secure anchorage devices and other embedded items required for adjoining work that is attached to or supported by cast-in-place concrete. Use Setting Drawings, templates, diagrams, instructions, and directions furnished with items to be embedded.

1. Install anchor bolts, accurately located, to elevations required.
2. Install reglets to receive top edge of foundation sheet waterproofing and to receive through-wall flashings in outer face of concrete frame at exterior walls, where flashing is shown at lintels, shelf angles, and other conditions.
3. Install dovetail anchor slots in concrete structures as indicated.

3.3 REMOVING AND REUSING FORMS

A. General: Formwork, for sides of beams, walls, columns, and similar parts of the Work, that do not support the weight of concrete may be removed after cumulatively curing at not less than 50 deg. F for 24 hours after placing concrete provided concrete is hard enough to not be damaged by form-removal operations and provided curing and protection operations are maintained.

B. Clean and repair surfaces of forms to be reused in the Work. Split, frayed, delaminated, or otherwise damaged form-facing material will not be acceptable for exposed surfaces. Apply new form-release agent.

C. When forms are reused, clean surfaces, remove fins and laitance, and tighten to close joints. Align and secure joints to avoid offsets. Do not use patched forms for exposed concrete surfaces unless approved by Architect.

3.4 VAPOR BARRIER AND GRANULAR MATERIAL

A. Vapor Barrier: Place, protect, and repair membrane according to ASTM E 1643, ASTM F 710 and manufacturer's written instructions. Contractor shall place the vapor barrier directly below the concrete slab and on top of granular fill. Lap joints 6 inches minimum and seal with

manufacturer's recommended tape. Sheets to extend to interior face of foundation walls, turn up vertically and terminate flush with top of concrete floor slab. Adhere to foundation wall with manufacturer's recommended tape. Seal all penetrations with manufacturer's recommended methods of boots, mastic or tape.

B. Granular Fill: Place a minimum of 4 inches compacted granular fill on top of subgrade to elevation tolerances of plus 0 inch or minus 1/2 inch.

3.5 STEEL REINFORCEMENT

A. General: Comply with CRSI's "Manual of Standard Practice" for placing reinforcement.

1. Do not cut or puncture vapor retarder. Repair damage and reseal vapor retarder before placing concrete.

B. Clean reinforcement of loose rust and mill scale, earth, ice, and other foreign materials.

C. Accurately position, support, and secure reinforcement against displacement. Locate and support reinforcement with bar supports to maintain minimum concrete cover. Do not tack weld crossing reinforcing bars.

1. Shop- or field-weld reinforcement according to AWS D1.4, where indicated.

D. Set wire ties with ends directed into concrete, not toward exposed concrete surfaces.

E. Install welded wire fabric in longest practicable lengths on bar supports spaced at 3'-0" maximum spacing to minimize sagging. Lap edges and ends of adjoining sheets at least one mesh spacing. Offset laps of adjoining sheet widths to prevent continuous laps in either direction. Lace overlaps with wire.

3.6 JOINTS

A. General: Construct joints true to line with faces perpendicular to surface plane of concrete.

B. Construction Joints: Install so strength and appearance of concrete are not impaired, at locations indicated or as approved by Architect.

1. Place joints perpendicular to main reinforcement. Continue reinforcement across construction joints, unless otherwise indicated. Do not continue reinforcement through sides of strip placements of floors and slabs.
2. Form from preformed galvanized steel, plastic keyway-section forms, or bulkhead forms with keys, unless otherwise indicated. Embed keys at least 1-1/2 inches into concrete.
3. Locate horizontal joints in walls and columns at underside of floors, slabs, beams, and girders and at the top of footings or floor slabs.
4. Space vertical joints in walls as indicated. Locate joints beside piers integral with walls, near corners, and in concealed locations where possible.

5. Use epoxy-bonding adhesive at locations where fresh concrete is placed against hardened or partially hardened concrete surfaces.

C. Contraction (Control) Joints in Slabs-on-Grade: Construct contraction joints in slabs-on-grade to form panels of patterns as shown. Use saw cuts or inserts.

1. Grooved Joints Using Inserts: Form contraction joints by inserting premolded plastic, hardboard, or fiberboard strip into fresh concrete until top surface of strip is flush with slab surface. After concrete has cured, remove inserts and clean groove of loose debris.
2. Sawed Joints: Form contraction joints with power saws equipped with shatterproof abrasive or diamond-rimmed blades. Cut 1/8 inch wide joints to a depth of one-third the slab thickness. Cut into concrete when cutting action will not tear, abrade, or otherwise damage surface and before concrete develops random contraction cracks.
3. Clean all debris from joints.

D. Isolation Joints in Slabs-on-Grade: After removing formwork, install joint-filler strips at slab junctions with vertical surfaces, such as column pedestals, foundation walls, grade beams, and other locations, as indicated.

1. Extend joint-filler strips full width and depth of joint, terminating flush with finished concrete surface, unless otherwise indicated.
2. Terminate full-width joint-filler strips not less than 1/2 inch or more than 1 inch below finished concrete surface where joint sealants, specified in Division 7 Section "Joint Sealants," are indicated.
3. Install joint-filler strips in lengths as long as practicable. Where more than one length is required, lace or clip sections together.

E. Dowel Joints: Install dowel sleeves and dowels or dowel bar and support assemblies at joints where indicated.

1. Use dowel sleeves or lubricate or asphalt-coat one-half of dowel length to prevent concrete bonding to one side of joint.

3.7 CONCRETE PLACEMENT

A. Before placing concrete, verify that installation of formwork, reinforcement, and embedded items is complete and that required inspections have been performed.

B. Before placing concrete, water may not be added at Project site, <u>unless there is a specific written indication on the delivery slip of how much water has not been added to the mix at the mixing plant.</u>

1. Do not add water to concrete after adding high-range water-reducing admixtures to mix. The addition of fiber reinforcement to concrete for slab construction will reduce field tested concrete slumps. The lower slump values for concrete that contain fiber reinforcement will not reduce workability of the concrete. Per ACI 302, the workability of a concrete mixture is not directly proportional to the slump. The addition of water at the project site to increase slump will likely result in excessive bleed water during finishing

operations and is not permitted. Contractor shall contact fiber reinforcement representative to address any concerns with concrete workability and field tested slumps.

C. Deposit concrete continuously or in layers of such thickness that no new concrete will be placed on concrete that has hardened enough to cause seams or planes of weakness. If a section cannot be placed continuously, provide construction joints as specified. Deposit concrete to avoid segregation.

1. Consolidate placed concrete with mechanical vibrating equipment. Use equipment and procedures for consolidating concrete recommended by ACI 309R.
2. Do not use vibrators to transport concrete inside forms. Insert and withdraw vibrators vertically at uniformly spaced locations no farther than the visible effectiveness of the vibrator. Place vibrators to rapidly penetrate placed layer and at least 6 inches into preceding layer. Do not insert vibrators into lower layers of concrete that have begun to lose plasticity. At each insertion, limit duration of vibration to time necessary to consolidate concrete and complete embedment of reinforcement and other embedded items without causing mix constituents to segregate.

D. Deposit and consolidate concrete for floors and slabs in a continuous operation, within limits of construction joints, until placement of a panel or section is complete.

1. Consolidate concrete during placement operations so concrete is thoroughly worked around reinforcement and other embedded items and into corners.
2. Maintain reinforcement in position on chairs during concrete placement.
3. Screed slab surfaces with a straightedge and strike off to correct elevations.
4. Slope surfaces uniformly to drains where required.
5. Begin initial floating using bull floats or darbies to form a uniform and open-textured surface plane, free of humps or hollows, before excess moisture or bleedwater appears on the surface. Do not further disturb slab surfaces before starting finishing operations.

E. Cold-Weather Placement: Comply with ACI 306.1 and as follows. Protect concrete work from physical damage or reduced strength that could be caused by frost, freezing actions, or low temperatures.

1. When air temperature has fallen to, or is expected to fall below 40 deg F, uniformly heat water and aggregates before mixing to obtain a concrete mixture temperature of not less than 50 deg. F and not more than 80 deg. F at point of placement.
2. Do not use frozen materials or materials containing ice or snow. Do not place concrete on frozen subgrade or on subgrade containing frozen materials.
3. Do not use calcium chloride, salt, or other materials containing antifreeze agents or chemical accelerators, unless otherwise specified and approved in mix designs.

F. Hot-Weather Placement: Place concrete according to recommendations in ACI 305R and as follows, when hot-weather conditions exist:

1. Cool ingredients before mixing to maintain concrete temperature below 90 deg. F at time of placement. Chilled mixing water or chopped ice may be used to control temperature, provided water equivalent of ice is calculated to total amount of mixing water. Using liquid nitrogen to cool concrete is Contractor's option.

2. Cover steel reinforcement with water-soaked burlap so steel temperature will not exceed ambient air temperature immediately before embedding in concrete.
3. Fog-spray forms, steel reinforcement, and subgrade just before placing concrete. Keep subgrade moisture uniform without standing water, soft spots, or dry areas.

3.8 FINISHING FORMED SURFACES

A. Rough-Formed Finish: As-cast concrete texture imparted by form-facing material with tie holes and defective areas repaired and patched. Remove fins and other projections exceeding ACI 347R limits for class of surface specified.

B. Smooth-Formed Finish: As-cast concrete texture imparted by form-facing material, arranged in an orderly and symmetrical manner with a minimum of seams. Repair and patch tie holes and defective areas. Remove fins and other projections exceeding 1/8 inch in height.

1. Apply to concrete surfaces exposed to public view or to be covered with a coating or covering material applied directly to concrete, such as waterproofing, dampproofing, veneer plaster, or painting.
2. Do not apply rubbed finish to smooth-formed finish.

C. Rubbed Finish: Apply the following to smooth-formed finished concrete:

1. Smooth-Rubbed Finish: Not later than one day after form removal, moisten concrete surfaces and rub with carborundum brick or another abrasive until producing a uniform color and texture. Do not apply cement grout other than that created by the rubbing process.
2. Grout-Cleaned Finish: Wet concrete surfaces and apply grout of a consistency of thick paint to coat surfaces and fill small holes. Mix one part portland cement to one and one-half parts fine sand with a 1:1 mixture of bonding admixture and water. Add white portland cement in amounts determined by trial patches so color of dry grout will match adjacent surfaces. Scrub grout into voids and remove excess grout. When grout whitens, rub surface with clean burlap and keep surface damp by fog spray for at least 36 hours.

D. Related Unformed Surfaces: At tops of walls, horizontal offsets, and similar unformed surfaces adjacent to formed surfaces, strike off smooth and finish with a texture matching adjacent formed surfaces. Continue final surface treatment of formed surfaces uniformly across adjacent unformed surfaces, unless otherwise indicated.

3.9 WATERSTOPS

A. Flexible Waterstops: Install in construction joints and at other joints to form a continuous diaphragm. Install in longest lengths practicable. Support and protect exposed waterstops during progress of the Work. Field fabricate joints in waterstops according to manufacture's written instructions.

3.10 FINISHING FLOORS AND SLABS

A. General: Comply with recommendations in ACI 302.1R for screeding, restraightening, and finishing operations for concrete surfaces. Do not wet concrete surfaces.

B. Concrete placement conditions should satisfy the following requirements to reduce random slab cracking:

1. The base shall be free of frost and should not contain standing water. If concrete is placed in hot, dry conditions, the base should be lightly damped with water in advance of concreting.
2. When slabs are placed on grade, there should be no more than 30 deg. F difference between the temperature of the base and concrete at the time of placement.
3. Ideally, concrete should be protected from sun and wind and be placed after floor or roof deck is installed.

C. Requirements for finishing slabs with fiber reinforcement:

1. The use of vibratory screeds per standard ACI recommendations is required.
2. Consult fiber manufacturer representative if bleed water appears during finishing operations. Removing bleed water by any means other than natural evaporation will likely expose fibers in the finished surface.
3. Conduct power trowel operations as late as possible per standard ACI recommendations.

D. Scratch Finish: While still plastic, texture concrete surface that has been screeded and bull-floated or darbied. Use stiff brushes, brooms, or rakes.

1. Apply scratch finish to surfaces indicated and to surfaces to receive concrete floor topping or mortar setting beds for ceramic or quarry tile, portland cement terrazzo, and other bonded cementitious floor finishes.

E. Float Finish: Consolidate surface with power-driven floats or by hand floating if area is small or inaccessible to power driven floats. Restraighten, cut down high spots, and fill low spots. Repeat float passes and restraightening until surface is left with a uniform, smooth, granular texture.

1. Apply float finish to surfaces indicated, to surfaces to receive trowel finish, and to floor and slab surfaces to be covered with fluid-applied or sheet waterproofing, built-up or membrane roofing, or sand-bed terrazzo.

F. Trowel Finish: After applying float finish, apply first trowel finish and consolidate concrete by hand or power-driven trowel. Continue troweling passes and restraighten until surface is free of trowel marks and uniform in texture and appearance. Grind smooth any surface defects that would telegraph through applied coatings or floor coverings.

1. Apply a trowel finish to surfaces indicated and to floor and slab surfaces exposed to view or to be covered with resilient flooring, carpet, ceramic or quarry tile set over a cleavage membrane, paint, or another thin film-finish coating system
2. Finish surfaces to the following tolerances, measured within 24 hours according to ASTM E 1155 for a randomly trafficked floor surface:

a. Specified overall values of flatness, F(F) 35; and levelness, F(L) 25; with minimum local values of flatness, F(F) 24; and levelness, F(L) 17; for slabs-on-grade.

b. Specified values of flatness shall be based on “10-ft straightedge method” for suspended slabs. Flatness shall be within 1/8-inch per 10-ft for four of five consecutive measurements. In addition, visually obvious faults in floor flatness shall be corrected at contractor’s own expense.

G. Trowel and Fine-Broom Finish: Apply a partial trowel finish, stopping after second troweling, to surfaces indicated and to surfaces where ceramic or quarry tile is to be installed by either thickset or thin-set method. Immediately after second troweling, and when concrete is still plastic, slightly scarify surface with a fine broom.

H. Broom Finish: Apply a broom finish to exterior concrete platforms, steps, and ramps, and elsewhere as indicated.

1. Immediately after float finishing, slightly roughen trafficked surface by brooming with fiber-bristle broom perpendicular to main traffic route. Coordinate required final finish with Architect before application.

3.11 MISCELLANEOUS CONCRETE ITEMS

A. Filling In: Fill in holes and openings left in concrete structures, unless otherwise indicated, after work of other trades is in place. Mix, place, and cure concrete, as specified, to blend with in-place construction. Provide other miscellaneous concrete filling indicated or required to complete Work.

B. Curbs: Provide monolithic finish to interior curbs by stripping forms while concrete is still green and by steel-troweling surfaces to a hard, dense finish with corners, intersections, and terminations slightly rounded.

C. Equipment Bases and Foundations: Provide machine and equipment bases and foundations as shown on Drawings. Set anchor bolts for machines and equipment at correct elevations, complying with diagrams or templates of manufacturer furnishing machines and equipment.

3.12 CONCRETE PROTECTION AND CURING

A. General: Protect freshly placed concrete from premature drying and excessive cold or hot temperatures. Comply with ACI 306.1 for cold-weather protection and with recommendations in ACI 305R for hot-weather protection during curing.

B. Evaporation Retarder: Apply evaporation retarder to unformed concrete surfaces if hot, dry, or windy conditions cause moisture loss approaching 0.2 lb/sq. ft. x h before and during finishing operations. Apply according to manufacturer's written instructions after placing, screeding, and bull floating or darbying concrete, but before float finishing.

C. Formed Surfaces: Cure formed concrete surfaces, including underside of beams, supported slabs, and other similar surfaces. If forms remain during curing period, moist cure after

loosening forms. If removing forms before end of curing period, continue curing by one or a combination of the following methods for unformed surfaces.

D. Unformed Surfaces: Begin curing immediately after finishing concrete. Cure unformed surfaces, including floors and slabs, concrete floor toppings, and other surfaces, by one or a combination of the following methods:

1. Moisture-Retaining-Cover Curing: Cover concrete surfaces with Plastic Sheet cover for curing concrete, placed in widest practicable width, with sides and ends lapped at least 12 inches. Cure for not less than 24 hours.

   a. Cure concrete surfaces to receive floor coverings with a Plastic Sheet cover for 24 hours or a curing compound that the manufacturer recommends for use with floor coverings.

2. Curing Compound: Apply uniformly in continuous operation by power spray or roller according to manufacturer's written instructions. Recoat areas subjected to heavy rainfall within three hours after initial application. Maintain continuity of coating and repair damage during curing period.
3. Curing and Sealing Compound: Apply uniformly to floors and slabs indicated in a continuous operation by power spray or roller according to manufacturer's written instructions. Recoat areas subjected to heavy rainfall within three hours after initial application. Repeat process 24 hours later and apply a second coat. Maintain continuity of coating and repair damage during curing period.

3.13 JOINT FILLING

A. Prepare, clean, and install joint filler according to manufacturer's written instructions.

B. Remove dirt, debris, saw cuttings, curing compounds, and sealers from joints; leave contact faces of joint clean and dry.

C. Install semi-rigid epoxy joint filler full depth in saw-cut joints and at least 2 inches deep in formed joints. Fill joint in a manner that provides a finish at the joint which is flush with the surrounding surface of the slab.

D. Joint filling is not required for 1/8-inch wide control joints.

3.14 CONCRETE SURFACE REPAIRS

A. Defective Concrete: Repair and patch defective areas when approved by Architect. Remove and replace concrete that cannot be repaired and patched to Architect's approval.

B. Patching Mortar: Mix dry-pack patching mortar, consisting of one part portland cement to two and one-half parts fine aggregate passing a No. 16 sieve, using only enough water for handling and placing.

C. Repairing Formed Surfaces: Surface defects include color and texture irregularities, cracks, spalls, air bubbles, honeycombs, rock pockets, fins and other projections on the surface, and stains and other discolorations that cannot be removed by cleaning.

1. Immediately after form removal, cut out honeycombs, rock pockets, and voids more than 1/2 inch in any dimension in solid concrete but not less than 1 inch in depth. Make edges of cuts perpendicular to concrete surface. Clean, dampen with water, and brush-coat holes and voids with bonding agent. Fill and compact with patching mortar before bonding agent has dried. Fill form-tie voids with patching mortar or cone plugs secured in place with bonding agent.
2. Repair defects on surfaces exposed to view by blending white portland cement and standard portland cement so that, when dry, patching mortar will match surrounding color. Patch a test area at inconspicuous locations to verify mixture and color match before proceeding with patching. Compact mortar in place and strike off slightly higher than surrounding surface.
3. Repair defects on concealed formed surfaces that affect concrete's durability and structural performance as determined by Architect.

D. Repairing Unformed Surfaces: Test unformed surfaces, such as floors and slabs, for finish and verify surface tolerances specified for each surface. Correct low and high areas. Test surfaces sloped to drain for trueness of slope and smoothness; use a sloped template.

1. Repair finished surfaces containing defects. Surface defects include spalls, popouts, honeycombs, rock pockets, crazing and cracks in excess of 0.01 inch wide or that penetrate to reinforcement or completely through unreinforced sections regardless of width, and other objectionable conditions.
2. After concrete has cured at least 14 days, correct high areas by grinding.
3. Correct localized low areas during or immediately after completing surface finishing operations by cutting out low areas and replacing with patching mortar. Finish repaired areas to blend into adjacent concrete.
4. Correct other low areas scheduled to receive floor coverings with a repair underlayment. Prepare, mix, and apply repair underlayment and primer according to manufacturer's written instructions to produce a smooth, uniform, plane, and level surface. Feather edges to match adjacent floor elevations.
5. Correct other low areas scheduled to remain exposed with a repair topping. Cut out low areas to ensure a minimum repair topping depth of 1/4 inch to match adjacent floor elevations. Prepare, mix, and apply repair topping and primer according to manufacturer's written instructions to produce a smooth, uniform, plane, and level surface.
6. Repair defective areas, except random cracks less than 0.01 inch wide and single holes 1 inch or less in diameter, by cutting out and replacing with fresh concrete. Remove defective areas with clean, square cuts and expose steel reinforcement with at least 3/4 inch clearance all around. Dampen concrete surfaces in contact with patching concrete and apply bonding agent. Mix patching concrete of same materials and mix as original concrete except without coarse aggregate. Place, compact, and finish to blend with adjacent finished concrete. Cure in same manner as adjacent concrete.
7. Repair random cracks less than 0.01 inch wide and single holes 1 inch or less in diameter with patching mortar. Groove top of cracks and cut out holes to sound concrete and clean

off dust, dirt, and loose particles. Dampen cleaned concrete surfaces and apply bonding agent. Place patching mortar before bonding agent has dried. Compact patching mortar and finish to match adjacent concrete. Keep patched area continuously moist for at least 72 hours.

E. Perform structural repairs of concrete, subject to Architect's approval, using epoxy adhesive and patching mortar. All removal and repairs shall be at Contractor's own expense.

F. Repair materials and installation not specified above may be used, subject to Architect's approval. All removal and repairs shall be at Contractor's own expense.

3.15 FIELD QUALITY CONTROL

A. Testing Agency: Owner will engage a qualified independent testing and inspecting agency to sample materials, perform tests, and submit test reports during concrete placement according to requirements specified in this Article. See above Paragraph 2.5.G.2 for performance requirements at the expense of the concrete moisture vapor reduction admixture (MVRA) manufacturer.

B. Testing Services: Testing of composite samples of fresh concrete obtained according to ASTM C 172 shall be performed according to the following requirements:

1. Testing Frequency: Obtain one composite sample for each day's pour of each concrete mix exceeding 5 cu. yd., but less than 25 cu. yd., plus one set for each additional 30 cu. yd. or fraction thereof.
2. Slump: ASTM C 143; one test at point of placement for each composite sample, but not less than one test for each day's pour of each concrete mix. Perform additional tests when concrete consistency appears to change.
3. Air Content: ASTM C 231, pressure method, for normal-weight concrete; one test for each composite sample, but not less than one test for each day's pour of each concrete mix.
4. Concrete Temperature: ASTM C 1064; one test hourly when air temperature is 40 deg F and below and when 80 deg F and above, and one test for each composite sample.
5. Compression Test Specimens:

    a. ASTM C 31; cast and laboratory (standard) cure one set of three standard cylinder specimens for each composite sample. Transport the cylinders to laboratory within 24 hours for final curing and testing.
    b. ASTM C 31; cast and field cure one standard cylinder specimens for each composite sample. Field cure the cylinders for the first five (5) days, minimum, in the filed under the same conditions as the cast concrete. Transport the cylinders to the laboratory for continued curing and testing.

6. Compressive-Strength Tests:

    a. ASTM C 39; test one laboratory (standard) cured specimen at 7 days and 2 specimens at 28 days.
    b. ASTM C 39; test field cured specimen at 7 days.

C. When strength of field-cured cylinders is less than 85 percent of companion cylinders that have been totally cured in the laboratory (no field curing), Contractor shall evaluate operations and provide corrective procedures for protecting and curing in-place concrete.

D. A 28 day compressive-strength test for concrete shall be the average compressive strength from two specimens obtained from same composite sample and tested at 28 days.

E. Strength of concrete will be satisfactory if every average of sets of three consecutive compressive-strength tests at 28 days (total of 6 cylinders) equals or exceeds specified compressive strength and no compressive-strength test value falls below specified compressive strength by more than 500 psi.

F. If time of concrete strength gain is affected by materials in the mix, such as fly ash, provide correlation information between the 28-day compressive strength and the final compressive strength prior to performing compressive strength tests.

G. Non-destructive Testing: Impact hammer, sonoscope, or other nondestructive device may be permitted by Architect but will not be used as sole basis for approval or rejection of concrete.

H. Additional Tests: Testing and inspecting agency shall make additional tests of concrete when test results indicate that slump, air entrainment, compressive strengths, or other requirements have not been met, as directed by Architect. The Contractor will be notified of the tests and the tests will be paid for by the Contractor. Testing and inspecting agency may conduct tests to determine adequacy of concrete by cored cylinders complying with ASTM C 42 or by other methods as directed by Architect.

END OF SECTION 033000

SECTION 035416 - HYDRAULIC CEMENT UNDERLAYMENT

PART 1 - GENERAL

1.1 RELATED DOCUMENTS

A. Drawings and general provisions of the Contract, including General and Supplementary Conditions and Division 1 Specification Sections, apply to this Section.

1.2 SUMMARY

A. This Section includes the following:

1. Polymer-modified, self-leveling, hydraulic cement underlayment for application below interior floor coverings.

B. Related Sections include the following:

1. Division 9 Sections for finished flooring

1.3 SCOPE OF WORK

A. The General Contractor shall provide and install all hydraulic cement underlayment for this Project.

1. Incidental Applications: In accordance with Division 1 Section “Unit Prices”, provide and install an average of 1/8-inch thick (not including the depth of small voids and pockmarks) hydraulic cement underlayment over other existing irregular, uneven floor surfaces that are not considered by finish flooring manufacturers to comply with substrate tolerances or other requirements for the various types of flooring, including, but not limited to, resilient flooring and carpet products. Blend out and feather all patch edges out to existing and suitable concrete substrates.

B. All hydraulic cement underlayment shall be installed per manufacturer’s written installation instructions, and as required to maintain the new flooring manufacturer’s material and installation warranties.

1.4 PREINSTALLATION MEETING

A. Pre-installation Conference: Conduct conference at Project site to comply with Division 1 Section “Project Meetings”.

1.5 SUBMITTALS

A. Product Data: For each type of product specified.

B. Shop Drawings: Include plans indicating substrates, locations, and average depths of underlayment based on survey of substrate conditions.

C. Qualification Data: For Installer.

1.6 QUALITY ASSURANCE

A. Installer Qualifications: Installer who is approved by manufacturer for application of underlayment products required for this Project.

1.7 FIELD CONDITIONS

A. Environmental Limitations: Comply with manufacturer's written instructions for substrate temperature, ventilation, ambient temperature and humidity, and other conditions affecting underlayment performance.

1. Place hydraulic cement underlayment only when ambient temperature and temperature of substrates are between 50 and 80 deg. F.

PART 2 - PRODUCTS

2.1 PERFORMANCE REQUIREMENTS

A. Fire-Resistance Ratings: Comply with ASTM E 119; testing by a qualified testing agency. Identify products with appropriate markings of applicable testing agency.

1. Indicate design designations from UL's "Fire Resistance Directory" or from the listings of another qualified testing agency.

B. IIC-Rated Assemblies: For IIC-rated assemblies, provide materials and construction identical to those tested in assembly indicated, according to ASTM E 492 and classified according to ASTM E 989 by an independent testing agency.

C. Setting Times:

1. Initial Set: ASTM C 191; approximately 30 minutes.
2. Final Set: ASTM C 191; approximately 90 minutes.
3. Flow Time: Approximately 10 minutes.
4. Walkable: 2 to 3 hours.
5. Floor Covering Installation Timeline:

a. Moisture-insensitive tile and stone: 6 hours.
b. All other floor coverings: 16 hours.

D. Structural Performance:

1. Compressive Strength: ASTM C 109, air cure only; 5,500 psi at 28 days.
2. Flexural Strength: ASTM C 348; 1,000 at 28 days.

2.2 HYDRAULIC CEMENT UNDERLAYMENT

A. Hydraulic Cement Underlayment: Polymer-modified, self-leveling, hydraulic cement product that can be applied in minimum uniform thickness of 1/4 inch and that can be feathered at edges to match adjacent floor elevations. Maximum thickness shall be approximately 5 inches with manufacturer-approved aggregate. Underlayment without aggregate shall be able to be neatly installed in thicknesses ranging from approximately 1/8 inch to 1 1/2 inches.

1. Available Manufacturers: Subject to compliance with requirements, manufacturers offering products that may be incorporated into the Work include, but are not limited to, the following:

   a. ARDEX Americas.
   b. Schönox HPS North America
   c. BASF Construction Chemicals – Building Systems.
   d. Bonsal American, an Oldcastle company.
   e. L & M Construction Chemicals, Inc.
   f. MAPEI Corporation.
   g. Maxxon Corporation.
   h. Metalcrete Industries.
   i. TEC; H.B. Fuller Construction Products, Inc.

2. Cement Binder: ASTM C 150, Portland cement, or hydraulic or blended hydraulic cement as defined by ASTM C 219.
3. Compressive Strength: Not less than 4,000 psi at 28 days when tested according to ASTM C 109.
4. Underlayment Additive: Resilient-emulsion product of underlayment manufacturer, formulated for use with underlayment when applied to substrate and conditions indicated.

B. Aggregate: Well-graded, washed gravel, 1/8 to 1/4-inch; or coarse sand as recommended by underlayment manufacturer. Provide aggregate when recommended in writing by underlayment manufacturer for underlayment thickness required.

C. Water: Potable and at a temperature of not more than 70 deg. F.

D. Primer: Product of underlayment manufacturer recommended in writing for substrate, conditions, and application indicated.

1. Primer shall have a VOC content of 200 g/L or less when calculated according to 40 CFR 59, Subpart D.
2. Primer shall comply with the testing and product requirements of the California Department of Public Health's "Standard Method for the Testing and Evaluation of

Volatile Organic Chemical Emissions from Indoor Sources Using Environmental Chambers."

E. Corrosion-Resistant Coating: Recommended in writing by underlayment manufacturer for metal substrates.

1. Coating shall have a VOC content of 250 g/L or less when calculated according to 40 CFR 59, Subpart D.
2. Coating shall comply with the testing and product requirements of the California Department of Public Health's "Standard Method for the Testing and Evaluation of Volatile Organic Chemical Emissions from Indoor Sources Using Environmental Chambers."

F. Surface Sealer: Designed to reduce porosity as recommended by manufacturer for type of floor covering to be applied to underlayment.

G. Patching Compounds: Provide comparable products for general patching and skim-coating if underlayment system cannot adequately perform required patching operations.

PART 3 - EXECUTION

3.1 EXAMINATION

A. Examine substrates, with Installer present, for conditions affecting performance of the Work.

B. Proceed with application only after unsatisfactory conditions have been corrected.

3.2 PREPARATION

A. General: Prepare and clean substrate according to manufacturer's written instructions.

1. Treat nonmoving substrate cracks according to manufacturer's written instructions to prevent cracks from telegraphing (reflecting) through underlayment.
2. Fill substrate voids to prevent underlayment from leaking.

B. Concrete Substrates: Mechanically remove, according to manufacturer's written instructions, laitance, glaze, efflorescence, curing compounds, form-release agents, dust, dirt, grease, oil, and other contaminants that might impair underlayment bond.

1. Moisture Testing: Perform anhydrous calcium chloride test, ASTM F 1869. Proceed with installation only after substrates do not exceed a maximum moisture-vapor-emission rate of 3 lb of water/1000 sq. ft. in 24 hours.

C. Adhesion Tests: After substrate preparation, test substrate for adhesion with underlayment according to manufacturer's written instructions.

3.3 APPLICATION

A. General: Mix and apply underlayment components according to manufacturer's written instructions.

1. Close areas to traffic during underlayment application and for time period after application recommended in writing by manufacturer.
2. Coordinate application of components to provide optimum adhesion to substrate and between coats.
3. At substrate expansion, isolation, and other moving joints, allow joint of same width to continue through underlayment.

B. Apply primer over prepared substrate at manufacturer's recommended spreading rate.

C. Apply underlayment to produce uniform, level surface.

1. Apply a final layer without aggregate to product surface.
2. Feather edges to match adjacent floor elevations.

D. Cure underlayment according to manufacturer's written instructions. Prevent contamination during application and curing processes.

E. Do not install floor coverings over underlayment until after time period recommended in writing by underlayment manufacturer.

F. Apply surface sealer at rate recommended by manufacturer.

G. Remove and replace underlayment areas that evidence lack of bond with substrate, including areas that emit a "hollow" sound when tapped.

3.4 PROTECTION

A. Protect underlayment from concentrated and rolling loads for remainder of construction period.

END OF SECTION 035416

SECTION 042000 - UNIT MASONRY (ASSEMBLIES)

PART 1 - GENERAL

1.1 RELATED DOCUMENTS

A. Drawings and general provisions of the Contract, including General and Supplementary Conditions and Division 1 Specification Sections, apply to this Section.

1.2 SUMMARY

A. This Section includes unit masonry assemblies consisting of the following:

1. Concrete masonry units.
2. Face brick.
3. Mortar and grout materials.
4. Mortar and grout mixes.
5. Reinforcing steel.
6. Masonry joint reinforcement.
7. Ties and anchors.
8. Embedded flashing.
9. Miscellaneous masonry accessories and auxiliary materials.
10. Masonry cleaners.

B. Related Sections include the following:

1. Division 3 Section “Cast-in-Place Concrete” for concrete fill for unit masonry cells and bond beams.
2. Division 4 Section “Cast Stone Masonry” for precast concrete units.
3. Division 5 Section “Metal Fabrications” for loose steel lintels and bearing plates and for other miscellaneous steel items installed as part of unit masonry assemblies.
4. Division 5 Sections “Steel Joist Framing” and “Structural Steel Framing” (and the Structural Drawings) for coordination, and for layout requirements for bearing plates and similar items.
5. Division 7 Section "Sheet Metal Flashing and Trim" for sheet metal flashing and trim items that get built into unit masonry assemblies.
6. Division 7 Section “Foamed-in-Place Insulation” for foam insulation to be used in wall cavities.
7. Division 8 Section “Hollow Metal Doors and Frames” for hollow metal door frames that get built into unit masonry assemblies.

1.3 DEFINITIONS

A. Reinforced Masonry: Masonry containing reinforcing steel in grouted cells.

1.4 PERFORMANCE REQUIREMENTS

A. Provide unit masonry that develops the following net-area compressive strengths (f'm) at 28 days. Determine compressive strength of masonry from net-area compressive strengths of masonry units and mortar types according to Tables 1 and 2 in ACI 530.1/ASCE 6/TMS 602.

1. For Concrete Unit Masonry: 2000 psi (MPa).

1.5 SUBMITTALS

A. Product Data: For each different masonry unit, accessory, and other manufactured product specified, to comply with requirements in Division 1 Section "Submittals".

B. Pre-installation Coordination Drawings: In accordance with Division 1 Section "Project Coordination", prepare Coordination Drawings to coordinate unit masonry assemblies with the Work of other trades. Coordination drawings shall be reviewed by all Prime Contractors at the Masonry Pre-Installation Conference. Coordination items include, but are not limited to the following:

1. Sizes and locations of all masonry openings, coordinated with items installed by other trades, both interior and exterior, i.e., louvers, grilles, doors and windows, scuppers, etc. **At a minimum, coordination drawings must show ALL required openings through the finished exterior building masonry.**
2. Locations of all expansion and control joints. **Locations shall be supported by a method recommended by current, published technical standards. Refer to Paragraph 3.2.A below for additional information.**
3. Locations of all in-wall rainwater conductors and outlets through the wall.
4. Locations of all piped sleeves and other foundation penetrations.

C. Shop Drawings: In accordance with Division 1 Section "Submittals", prepare and submit Shop Drawings including details of the following, at a scale of not less than 3" = 1'-0".

1. Locations and types of lintels.
2. Indicate required horizontal and vertical reinforcing and horizontal masonry bond beams.
3. Fabricated flashing details, sections and installation methods including, but not limited to, through-wall base flashings, sill flashings, head flashings, low roof/high wall flashings, cap flashings, corner flashings, end dam flashings, stepped flashings and 2-piece flashing assemblies.
4. Locations and detailed methods of attachment to supporting structural items and systems.
5. Submit details and installation methods incorporating special shape units.
6. Submit documentation of constructability issues related to design, installation methods, applicable building codes, fire-ratings and/or compatibility conditions. Accompany documentation with the most recent technical standards published by the International Masonry Institute, National Concrete Masonry Association, Brick Industry Association and/or product manufacturer's printed recommendations.

a. Compatibility Reports: Certification from foamed-in-place polyurethane insulation manufacturer indicating insulation is chemically and adhesively compatible with all adjoining cavity wall assembly materials including, but not limited to, membrane and metal flashing materials, sealants, backer rods, masonry reinforcing, masonry ties, gaskets and similar materials. List all materials, if any, which may be damaged by coming into contact with foamed-in-place insulation, either by short-term or long-term contact. Refer to Division 7 Section "Foamed-In-Place Insulation."

D. Samples for Initial Selection of the following:

1. Unit masonry samples for each different exposed masonry unit required. Submit face brick to show range of colors, texture and mortar types for matching existing brick. Submit concrete masonry samples to illustrate texture.
2. Colored mortar samples showing the full range of colors available.

E. Samples for Verification of the following:

1. Full-size units for each different exposed masonry unit required showing the full range of exposed colors, textures, and dimensions to be expected in the completed construction. Sufficient quantity of units shall be provided to construct the specified Sample Panel.
2. Colored mortar samples for each color required, showing the full range of colors expected in the finished construction. **Make samples using the same sand and mortar ingredients to be used on Project.** Label samples to indicate types and amounts of pigments used.
3. Weeps/vents in color to match mortar color.
4. Accessories embedded in masonry assemblies.

F. List of Materials Used in Constructing Mockups: List generic product names together with manufacturers, manufacturers' product names, model numbers, lot numbers, batch numbers, source of supply, and other information as required to identify materials used. Include mix proportions for mortar and grout and source of aggregates.

1. Submittal is for information only. Neither receipt of list nor approval of mockup constitutes approval of deviations from requirements of the Contract Documents, unless such deviations are specifically brought to the attention of Architect and approved in writing.

G. Qualification Data: For firms and persons specified in "Quality Assurance" Article.

H. Material Test Reports: From a qualified testing agency indicating and interpreting test results of the following for compliance with requirements specified:

1. Each type of masonry unit required.

a. Include size-variation data for brick, verifying that actual range of sizes falls within specified tolerances.
b. Include test results, measurements, and calculations establishing net-area compressive strength of masonry units and gross-area compressive strength of clay bricks.

2. Mortar complying with ASTM C270.
3. Grout mixes complying with compressive strength requirements of ASTM C476. Include description of type and proportions of grout ingredients.
4. Submit concrete mix design for filling masonry cells and bond beams. Use concrete mix having a 28-day compressive strength of 3000 psi.

    a. Refer to Division 3 Section “Cast-in-Place Concrete”.

I. Material Certificates: Signed by manufacturers certifying that each of the following items complies with specified requirements:

1. Each type of masonry unit required.

    a. Include size-variation data for brick, verifying that actual range of sizes falls within specified tolerances.
    b. Include test data, measurements, and calculations establishing net-area compressive strength of masonry units.

2. Each cement product required for mortar and grout, including name of manufacturer, brand, type, and weight slips at time of delivery.
3. Each combination of masonry unit type and mortar type. Include statement of net-area compressive strength of masonry units, mortar type, and net-area of masonry determined according to Tables 1 and 2 in ACI 530.1/ASCE 6/TMS 602.
4. Each material and grade indicated for reinforcing bars.
5. Each type and size of joint reinforcement.
6. Each type and size of anchor, tie, and metal accessory.

J. Hot and Cold-Weather Procedures: Detailed description of methods, materials, and equipment to be used to comply with hot and cold-weather requirements.

1.6 QUALITY ASSURANCE

A. Testing and Inspections: Owner will engage an independent testing agency, acceptable to authorities having jurisdiction, and who is qualified according to ASTM C1093 to conduct all required testing and inspections, including IBC Special Inspections.

B. Source Limitations for Masonry Units: Obtain exposed masonry units of a uniform texture and color through one source from a single manufacturer and manufacturing plant.

C. Source Limitations for Mortar Materials: Obtain mortar ingredients of a uniform quality, including color for exposed masonry from one manufacturer for each cementitious component and from one source or producer for each aggregate.

D. Fire-Resistance Ratings: Where indicated, provide materials and construction identical to those of assemblies with fire-resistance ratings determined per Applicable Code by a testing and inspecting agency, by equivalent concrete masonry thickness, or by another means, as acceptable to authorities having jurisdiction.

E. Sample Panels: Prior to installation of above grade unit masonry, build sample panels, using single wythe veneer materials preliminarily selected for the completed Work. Build sample panels for each type of veneer masonry **48 inches long by 48 inches high** by full unit thickness.

1. Locate panels in locations indicated or, if not indicated, as directed by Architect.
2. Clean exposed faces of panels with masonry cleaner indicated.
3. Protect approved sample panels from the elements with weather-resistant membrane.
4. Maintain sample panels during construction in an undisturbed condition as a standard for judging the completed Work.
5. Approval of sample panels is for color, texture, and blending of masonry units; relationship of mortar and sealant colors to masonry unit colors; tooling of joints; aesthetic qualities of workmanship; and other material and construction qualities specifically approved by Architect in writing.

    a. Being preliminary in nature, multiple sample panels may be required to finalize unit masonry selections to be used on Project.
    b. Approval of sample panels does not constitute approval of deviations from Contract Documents contained in sample panels, unless such deviations are specifically approved by Architect in writing.
    c. Demolish and remove sample panels when directed by Architect.

F. Project Mockup: The intent of the Project Mockup is to evidence the quality of construction and the assembly requirements of all exterior building components and their interrelationship to each other. Prior to the installation of any above grade unit masonry, or other exterior building component, and allowing sufficient time for construction and approval, build a full-assembly project mockup using the materials and products indicated for the completed Work. Build full assembly mockup panel to include each type of unit masonry and each other specified building cladding material. The Project Mockup shall be **a minimum of 72-inches long by 72-inches high** or larger to accommodate all necessary components.

1. Notify Architect at least seven (7) days in advance of dates and times when mockups will be constructed.
2. Locate mockups in the location indicated or, if not indicated, as directed by Architect.
3. Provide typical masonry opening, steel lintel, sill and associated blocking, sill flashings, air-barrier and flashing as detailed on Drawings and as specified in this Section.
4. Include metal coping, roof edge fascia, gutter (if applicable), thru-wall overflow roof scupper, and associated blocking and fasteners as detailed on Drawings and as specified in Division 7 Section "Sheet Metal Flashing and Trim."
5. If an aluminum framed storefront assembly cannot be acquired in sufficient time without delaying approval of the Project Mockup, include a 4-1/2-inch-deep x 2-inch-wide wood framed representation of the window frame to verify the relationship of the face of the window frame to the face of the veneer masonry.
6. Omit portions of veneer, sill, coping, fascia, and aluminum frame to provide viewable *"cut-away"* areas and items of construction ordinarily hidden behind finished wall construction. Coordinate with Architect prior to Project Mockup construction.
7. Build Project Mockups to include the following construction assemblies by full assembly thickness, including face veneer, cavity, backup and accessories. Include a sealant-filled vertical joint at least 16-inches long in each assembly.

a. Each exposed unit masonry veneer with unit masonry backup assembly.
b. Each exposed unit masonry veneer with metal stud backup assembly.
c. Other assemblies incorporating unit masonry or metal stud backup and claddings as specified in Related Sections paragraph including but not limited to, metal panel assembles and exterior insulation finish system.
d. Sealants as specified in Division 7 Section “Joint Sealants”.

8. Clean exposed faces of Project Mockup with masonry or other appropriate cleaner.
9. Protect accepted Project Mockup from the elements with weather-resistant membrane.
10. Maintain Project Mockup during construction in an undisturbed condition as a standard for judging the completed Work.
11. Approval of Project Mockups is for color, texture, and blending of masonry units; the interrelationship of masonry units to other cladding products, the relationship of mortar and sealant colors to masonry unit colors; the tooling of joints; the aesthetic qualities of workmanship; the incorporation of specified and detailed products and accessories and other material and construction qualities specifically approved by Architect in writing.

    a. Approval of Project Mockups does not constitute approval of deviations from the Contract Documents, unless such deviations are specifically approved by Architect in writing.

12. Demolish and remove Project Mockup only when directed by Architect.

G. Preinstallation Conference: Conduct conference at Project site to comply with requirements in Division 1 Section "Project Meetings."

1.7 DELIVERY, STORAGE, AND HANDLING

A. Store masonry units on elevated platforms in a dry location. If units are not stored in an enclosed location, cover tops and sides of stacks with waterproof sheeting securely tied. If units become wet, do not install until they are dry.

    1. Protect concrete masonry units from moisture absorption so that at the time of installation the moisture content is not more than the maximum allowed at the time of delivery.

B. Store cementitious materials on elevated platforms, under cover, and in a dry location. Do not use cementitious materials that have become damp.

C. Store aggregates where grading and other required characteristics can be maintained, and contamination avoided.

D. Deliver preblended, dry mortar mix in moisture-resistant containers. Store preblended, dry mortar mixes on elevated platforms, under cover, and in a dry location or in a metal dispensing silo with weatherproof cover.

E. Store masonry accessories, including metal items, to prevent corrosion and accumulation of dirt and oil.

1.8 PROJECT CONDITIONS

A. Protection of Masonry: During construction, cover tops of walls, projections and sills with waterproof sheeting at end of each day's work. Cover partially completed masonry when construction is not in progress.

1. Extend cover a minimum of 24-inches down both sides and hold cover securely in place.
2. Where one wythe of multi-wythe masonry walls is completed in advance of other wythes, secure cover a minimum of 24-inches down face next to unconstructed wythe and secure cover in place.

B. Do not apply uniform floor or roof loads for at least 12-hours and concentrated loads for at least 3 days after building masonry walls or columns.

C. Stain Prevention: Prevent grout, mortar, and soil from staining the face of masonry to be left exposed or painted. Immediately remove grout, mortar, and soil that come into contact with such masonry.

1. Protect base of walls from rain-splashed mud and from mortar splatter by coverings spread on ground and over wall surfaces.
2. Protect sills, ledges, and projections from mortar droppings.
3. Protect surfaces of window and door frames, as well as similar products with painted and integral finishes, from mortar droppings.
4. Turn scaffold boards near the wall on edge at the end of each day to prevent rain from splashing mortar and dirt onto completed masonry.

D. Cold-Weather Requirements: Do not use frozen materials or materials mixed or coated with ice or frost. Do not build on frozen substrates. Remove and replace unit masonry damaged by frost or by freezing conditions. Comply with cold-weather construction requirements contained in ACI 530.1/ASCE 6/TMS 602.

1. Cold-Weather Cleaning: Use liquid cleaning methods only when air temperature is 50 deg F (4 deg C) and above and will remain so until masonry has dried, but not less than 7 days after completing cleaning. Follow manufacturer’s recommendations for minimum temperature.

E. Hot-Weather Requirements: Protect unit masonry work when temperature and humidity conditions produce excessive evaporation of water from mortar and grout. Provide artificial shade and wind breaks and use cooled materials as required.

1. When ambient temperature exceeds 90 deg F with a wind velocity greater than 8 mph, do not spread mortar beds more than 48-inches ahead of masonry. Set masonry units within one minute of spreading mortar.

PART 2 - PRODUCTS

2.1 CONCRETE MASONRY UNITS

A. General: Provide shapes indicated and as follows:

1. Provide special shapes for lintels, corners, jambs, sash, control joints, headers, bonding, and other special conditions.
2. Provide bullnose units for ALL INTERIOR outside corners unless otherwise noted.

B. Concrete Masonry Units: ASTM C90 and as follows:

1. Unit Compressive Strength: Provide units with minimum average net-area compressive strength of 2000 psi (MPa).
2. Weight Classification: Normal weight.
3. Size (Width): Manufactured to the following dimensions:

   a. 4 inches nominal; 3-5/8 inches actual.
   b. 6 inches nominal; 5-5/8 inches actual.
   c. 8 inches nominal; 7-5/8 inches actual.
   d. 10 inches nominal; 9-5/8 inches actual.
   e. 12 inches nominal; 11-5/8 inches actual.
   f. 14 inches nominal; 13-5/8 inches actual.
   g. 16 inches nominal; 15-5/8 inches actual.

4. Exposed Faces: Manufacturer's standard color and texture, unless otherwise indicated.

2.2 FACE BRICK

A. General: Provide shapes indicated and as follows for each form of brick required:

1. Provide units without cores or frogs and with exposed surfaces finished for ends of sills and caps and for similar applications that would otherwise expose unfinished brick surfaces.

B. Provide special shapes for applications requiring brick of size, form, color, and texture on exposed surfaces that cannot be produced by sawing.

1. Provide special shapes for applications where stretcher units cannot accommodate special conditions, including those at corners, movement joints, bond beams, sashes, and lintels.
2. Provide special shapes for applications where shapes produced by sawing would result in sawed surfaces being exposed to view.

C. Face Brick: ASTM C216, Grade SW, Type FBS, and as follows:

1. Unit Compressive Strength: Provide units with minimum average net-area compressive strength of 3000 psi.
2. Initial Rate of Absorption: Less than 20 g/30 sq. in. per minute when tested per ASTM C67.
3. Efflorescence: Provide brick that has been tested according to ASTM C67 and is rated "not effloresced".

4. Surface Coloring: Brick with surface coloring, other than flashed or sand-finished brick, shall withstand 50 cycles of freezing and thawing per ASTM C67 with no observable difference in the applied finish when viewed from 10 feet.
5. Size: Manufactured to the following actual dimensions:

    a. Utility Sized (New Additions): Nominally 3-5/8-inches by 3-5/8-inches by 11-5/8-inches long.

6. Color and Texture: This specification is based on the products indicated below. Architect reserves the right to revise and finalize all brick and mortar colors through the sample panel process.

    a. Brick #1 Color 'A' Glen-Gery Corp: Brick Blend- Glen Gery Dolomite Grey (40%) and Glen Gery Pearl River (60%) with mortar selected from full range of manufacturer colored mortar to match mortar on exiting building.

7. Manufacturers: Subject to compliance with specified requirements, additional manufacturers offering products that may be incorporated into the Work include, but are not limited to, the following:

    a. Glen-Gery Corp.
    b. Belden Brick.
    c. Watsontown Brick.
    d. Redland Brick, Inc.
    e. Endicott, Inc.
    f. General Shale, Inc.
    g. US Brick.

2.3 MORTAR AND GROUT MATERIALS

A. Available Products: Subject to compliance with specified requirements and suitability with specified materials as reviewed by Architect, products that may be incorporated into the Work include, but are not limited to, the following:

1. Colored Portland Cement-Lime Mix:

    a. Color Mortar Blend; Glen-Gery Corporation.
    b. Rainbow Mortamix Custom Color Cement/Lime; Holcim, Inc.
    c. Centurion Colorbond PL; Lafarge Corporation.
    d. Heidelberg Materials (formerly Lehigh Hanson, Inc.)

2. Mortar Pigments:

    a. True Tone Mortar Colors; Davis Colors.
    b. Centurion Pigments; Lafarge Corporation.
    c. SGS Mortar Colors; Solomon Colors, Inc.

B. Portland Cement: ASTM C150, Type I or II, except Type III may be used for cold-weather construction. Provide natural color or white cement as required to produce mortar color indicated.

C. Hydrated Lime: ASTM C207, Type S.

D. Portland Cement-Lime Mix: Packaged blend of portland cement complying with ASTM C 150, Type I or Type III, and hydrated lime complying with ASTM C207, Type S.

E. Aggregate for Mortar: ASTM C144; except for joints less than 1/4-inch thick, use aggregate graded with 100 percent passing the No. 16 sieve.

1. Colored-Mortar Aggregates: Natural-colored sand or ground marble, granite, or other sound stone; of color necessary to produce required mortar color.

F. Aggregate for Grout: ASTM C404.

G. Mortar Pigments: Natural and synthetic iron oxides and chromium oxides, compounded for use in mortar mixes. Use only pigments with a record of satisfactory performance in masonry mortar.

H. Water-Repellent Admixture: Liquid water-repellent mortar admixture intended for use with concrete masonry units containing integral water repellent by the same manufacturer as that used in the concrete masonry units (Section 2.1.C.5 above).

1. Provide integral water repellent admixture in mortar used for exposed decorative concrete masonry unit construction, including cavity wall construction.

I. Water: Potable.

2.4 MORTAR AND GROUT MIXES

A. General: Do not use calcium chloride. The use of admixtures will not be considered unless their suitability is reviewed and approved by Architect and demonstrated by laboratory test results simulating the conditions that warrant the desired use of the admixture.

B. Preblended, Dry Mortar Mix: Furnish dry mortar ingredients in the form of a preblended mix. Measure quantities by weight to ensure accurate proportions and thoroughly blend ingredients before delivering to Project site.

C. Mortar for Unit Masonry: Comply with ASTM C270, Proportion Specification.

1. Limit cementitious materials in mortar to portland cement and hydrated lime.
2. For masonry below grade, foundation walls, retaining walls in contact with earth, and where indicated, use Type M or Type S mortar, 1 part portland cement, 1/4 part Type S hydrated lime and 3-3/4 parts sand, with a minimum 28-day compressive strength of 2500 psi.
3. For above grade exterior brick and non-load bearing partitions use Type N mortar, 1 part portland cement, 1 part hydrated lime Type S and 6 parts sand.

4. For exterior above grade and load bearing clay brick and manufactured stone use Type S mortar.
5. For interior and exterior tuck pointing, use Type N mortar.
6. For restoration work, Contractor is required to review the existing mortar properties, including hardness, and the existing masonry properties and submit the appropriate type of mortar for approval by Architect.
7. For new brick veneer above grade use Type N mortar.
8. For natural stone masonry use Type M mortar.

D. Pigmented Mortar: Select and proportion pigments with other ingredients to produce color required. Limit pigments to the following percentages of cement content by weight:

1. For mineral-oxide pigments and portland cement-lime mortar, not more than 10 percent.
2. For carbon-black pigment and portland cement-lime mortar, not more than 2 percent.
3. For mineral-oxide pigments and mortar cement mortar, not more than 5 percent.
4. For carbon-black pigment and mortar cement mortar, not more than 1 percent.

E. Colored-Aggregate Mortar: Produce required mortar color by using colored aggregates combined with selected cementitious materials.

1. Mix to match Architect's sample.

F. Grout for Unit Masonry:

1. Use either pea gravel cement concrete or grout confirming with ASTM C476 with a minimum 28-day compressive strength of 3000 psi.
2. Provide grout with a slump of 8 to 11-inches as measured according to ASTM C143.

2.5 REINFORCING STEEL

A. Uncoated Steel Reinforcing Bars: ASTM A615; Grade 60.

2.6 MASONRY JOINT REINFORCEMENT

A. General: ASTM A951 and as follows:

1. Hot-dip galvanized, carbon-steel wire for both interior and exterior walls.
2. Wire Size for Side Rods: W1.7 or 0.148-inch diameter unless otherwise noted.
3. Wire Size for Cross Rods: W1.7 or 0.148-diameter unless otherwise noted.
4. Provide in lengths of not less than 10 feet, with prefabricated corner and tee units where indicated.

B. For single-wythe masonry, provide either ladder or truss type with a single pair of side rods and cross rods spaced not more than 16-inches o.c. Truss type shall not be used in vertically reinforced unit masonry walls.

C. For multi-wythe masonry, provide types as follows:

1. Adjustable (2-piece) type with single pair of side rods and cross ties spaced not more than 16-inches o.c., and with separate adjustable veneer ties engaging the cross ties. Crossties are either U-shaped with eyes or rectangular. Space side rods for embedment within each face shell of backup wythe and size adjustable ties to extend at least halfway through outer wythe but with at least 5/8-inch cover on outside face. Unless otherwise indicated, install in first and second courses above finished floor and in alternating back-up masonry courses thereafter.

    a. Use where indicated and where horizontal joints of facing wythe do not align (1-1/4-inches or less) with those of backup wythe.
    b. Use where facing wythe is of different material than backup wythe.
    c. Basis of Design Product: Hohmann & Barnard #270 Adjustable Ladder Eye-Wire Anchor System. Equal products are also acceptable.

        1) Coordinate the length of the projecting eye or hook with the thickness of the cavity wall insulation and use the appropriate product.

2. Adjustable (3-piece) type with ladder type reinforcement at back-up wythe which includes an extended cross rod. A vertical rod is hooked onto the extended cross rod and extends down to and behind the cross rod of the next lower truss type unit. An adjustable vee tie is hooked around the vertical rod for placement into the mortar joint of the face veneer.

    a. Use where indicated and where horizontal joints of facing wythe do not align (greater than 1-1/4-inches) with those of the back-up wythe.
    b. Basis of Design Product: Hohmann & Barnard Tie-HVR Anchor System. Equal products are also acceptable.

        1) Coordinate the length of the projecting eye or hook with the thickness of the cavity wall insulation and use the appropriate product.

2.7 TIES AND ANCHORS, GENERAL

A. General: Provide ties and anchors, specified in subsequent articles, made from materials that comply with this Article, and as required by Building Code Requirements and Specification for Masonry Structures; use of hot-dipped galvanized ties and anchors in exterior wall construction.

B. Hot-Dip Galvanized Carbon-Steel Wire: ASTM A82; with ASTM A153, Class B-2 coating.

C. Galvanized Steel Sheet: ASTM A653, G60, commercial-quality, steel sheet zinc coated by hot-dip process on continuous lines before fabrication.

D. Steel Sheet, Galvanized after Fabrication: ASTM A366 cold-rolled, carbon-steel sheet hot-dip galvanized after fabrication to comply with ASTM A153.

E. Steel Plates, Shapes, and Bars: ASTM A36. Plates, shapes, and bars exposed to weather shall be hot-dipped galvanized after fabrication.

2.8 ADJUSTABLE ANCHORS FOR CONNECTING TO STEEL FRAME OR LINTELS

A. General: Provide two-piece assemblies that allow vertical or horizontal adjustment but resist tension and compression forces perpendicular to plane of wall.

1. Anchor Section: Crimped 3/16-inch diameter, hot-dip galvanized steel wire anchor section for welding to steel.
2. Tie Section: Triangular-shaped wire tie, sized to extend within 1-inch of masonry face, made from 0.1875-inch (3/16-inch) diameter, hot-dip galvanized steel wire.

2.9 ANCHORS FOR CONNECTING TO SUBSTRATES

A. General: Provide two-piece assemblies that allow vertical or horizontal adjustment but resist tension and compression forces perpendicular to the plane of the wall.

1. Structural Performance Characteristics: Capable of withstanding a 200-lbf load in both tension and compression without deforming or developing play more than 0.05-inch.
2. Metal Stud Assemblies Basis of Design Product: Hohmann & Barnard HB-213-2X Adjustable Veneer Anchor. Equal products are also acceptable.

   a. HB-213-2X anchor shall be coordinated with details on Drawings and/or actual field conditions for appropriate length, gauge and offset to accommodate cavity width from face of rigid insulation to masonry veneer and to include the appropriate connection interface to anchor to substrate. Anchor has 3/16-inch round wire hooks (2x mortar bed thickness) which hook into a bent backplate. Backplate is predrilled with two 9/32-inch fastener holes. Provide appropriate stainless steel self-drilling, self-tapping screws and gasketed seal tape by Hohmann & Barnard, Inc., or equal product.

3. Sill and Jamb Blocking Basis of Design Product: Hohmann & Barnard Veneer Anchors #345-SV and #345-BT. Equal products are also acceptable.

   a. At sill blocking provide #345-SV and at jamb blocking provide #345-BT spaced and secured at 16-inches o.c. horizontally and vertically. Coordinate with details on Drawings and/or actual field conditions for the appropriate length to accommodate cavity width from face of rigid insulation and/or wood blocking and/or concrete masonry back-up face to masonry veneer and to include the appropriate connection interface to the anchor substrate. Provide appropriate stainless steel self-drilling, self-tapping screws.

2.10 JOINT STABILIZATION ANCHORS

A. General: Provide stabilization anchors in horizontal joints of masonry units across the joint between walls at all T-shaped wall intersections as follows:

1. Use either a manufactured steel joint stabilizing anchor consisting of two steel rods connected together by sliding plate assemblies (Basis-of-Design product, Hohmann & Barnard, Inc. Slip-Set Stabilizer Control Joint Anchor) or a 1-1/2-inch x 1/8-inch x 8-inch

steel strap anchor with 2-inch (90 degree) right-angle bent ends (Basis-of-Design product, Wire-Bond Rigid Steel Tie Z-Straps at masonry shear walls.

a. Anchors to be embedded in grout-filled cores of hollow concrete masonry units.
b. 16-inches o.c. vertical spacing.
c. Finish: Mill galvanized or hot-dip galvanized to comply with ASTM A153.

2.11 MISCELLANEOUS ANCHORS

A. Unit Type Inserts in Concrete: Cast-iron or malleable-iron inserts of type and size indicated.

B. Anchor Bolts: Steel bolts complying with ASTM A307, Grade A; with ASTM A563 hex nuts and, where indicated, flat washers; hot-dip galvanized to comply with ASTM A153, Class C; of diameter and length indicated and in the following configurations:

1. Headed bolts.
2. Non-headed bolts, bent in manner indicated.

C. Post-installed Anchors: Anchors as described below, with capability to sustain, without failure, load imposed within factors of safety indicated, as determined by testing per ASTM E488, conducted by a qualified independent testing agency.

1. Type: Chemical anchors.
2. Type: Expansion anchors.
3. Type: Undercut anchors.
4. For Post-installed Anchors in Concrete: Capability to sustain, without failure, a load equal to four times the loads imposed.
5. For Post-installed Anchors in Grouted Masonry Units: Capability to sustain, without failure, a load equal to six times the loads imposed.

2.12 EMBEDDED FLASHING MATERIALS

A. Metal Flashing: Fabrications and materials listed in this Paragraph take precedent over materials specified in Division 7 Section “Sheet Metal Flashing and Trim”. Fabricate from the following materials:

1. Fabricate metal two-piece roof flashings and expansion-joint water-stops from Type 304, 26 gauge (.018-inches thick) stainless steel formed to shape indicated.
2. Fabricate stainless steel drip plates from Type 304, 26 gauge (.018-inches thick) stainless steel furnished with a smooth, factory-formed hemmed edge. Width: 3-inches.

a. Basis of Design Product: Cheney Prefabricated Metal Flashing, the Cheney Flashing Co., Inc. Subject to compliance with all specified requirements, equal products by other manufacturers are also acceptable.

B. Concealed Flashing: For through-wall flashing not exposed to the exterior, use the following, unless otherwise indicated:

1. Laminated Stainless-Steel Flashing: Flexible, stainless steel with a polymer fabric laminated to the underside face with a non-asphaltic adhesive.

    a. Basis of Design Product: York Manufacturing, Inc. Multi-Flash SS. Use in conjunction with manufacturer's standard pre-formed 26 GA inside and outside corners. Subject to compliance with specified requirements, available products by other manufacturers include, but are not limited to, the following:

        1) Prosoco Inc. Wall Guardian Stainless Steel TWF.
        2) TK Products, Inc. TK TWF.

    b. Stainless-steel Type 304, ASTM A240.
    c. Thickness: Minimum 2 mils.
    d. Puncture Resistance: Minimum 2,500 psi per ASTM E154.
    e. Width: As required to comply with details on Drawings and with Flashing, Weeps and Vents Paragraph below.
    f. Warranty: Life of wall.

C. Solder and Sealants for Sheet Metal Flashings: As specified in Division 7 Section "Sheet Metal Flashing and Trim."

D. Adhesives, Mastics, Primers, and Seam Tapes for Flashings: Flashing manufacturer's standard products or products recommended by flashing manufacturer for bonding flashing sheets to each other and to substrates.

2.13 MISCELLANEOUS MASONRY ACCESSORIES AND AUXILIARY MATERIALS

A. Non-Combustible Semi-Rigid Expansion Material: Moisture resistant semi-rigid, mono-density stone wool insulation board for use as a fire stop for compliance with NFPA 285.

    1. Products: Provide one of the following as a Basis-of-Design:

        a. RockWool Cavityrock.
        b. Owens Corning Thermafiber Rain Barrier Dark.

B. Compressible Exterior Expansion Joint Filler: Silicone faced acrylic-impregnated expanding foam sealant and closed-cell foam sealant system. ASTM E283-04, compressible up to 50 percent; of width and thickness indicated. Color as selected by Architect, from full range of standard and special colors.

    1. Products: Provide the following as a Basis-of-Design:

        a. Colorseal, Emseal Joint Systems, Ltd.

C. Preformed Control-Joint Gaskets: Styrene-Butadiene-Rubber Compound designed to fit standard sash block and to maintain lateral stability in masonry wall. ASTM D2000, Designation M2AA-805.

    1. Products: Provide products by one of the following manufacturers:

a. Hohmann & Barnard, Inc.
b. Sandell Mfg. Co., Inc.

D. Bond-Breaker Strips: Asphalt-saturated, organic roofing felt complying with ASTM D226, Type I (No. 15 asphalt felt).

E. Sill Weep: Weeps shall be installed as detailed at 16-inches o.c. on top of the metal drip plate along the length of the sill. Install per manufacturer's written instructions. Lay vents flat on top of stainless-steel drip plate.

1. Products: Basis of Design product, Hohmann & Barnard, Inc., QV-Quadro-Vent.

a. Polypropylene tested in conformance with ASTM D2240, D790B, D638 and D1238B.
b. Honeycomb design.
c. Color as selected by Architect from full range of standard and special colors, and to match the associated mortar color.
d. Size according to associated masonry veneer units.

F. Cavity Drainage Material: Free-draining mesh made from polyethylene strands and shaped to avoid being clogged by mortar droppings. Use standard thickness products in compliance with manufacturer's gap tolerance between cavity substrate surfaces.

1. Basis of Design Products: Mortar Net USA, Mortar Net or Hohmann & Barnard, Inc. Mortar Trap, base of wall cavity drainage material.

a. The use of a full height cavity drainage material in insulated cavity walls is an acceptable alternative to a base-of-wall cavity drainage product. Basis of Design Product: CavClear, CavClear Masonry Mat, a division of Archovations, Inc.

G. Cavity Weeps and Vents: As a Basis of Design, provide one of the following products:

1. Mortar Net Weep Vents, Mortar Net USA, Ltd.
2. Mortar Trap, Hohmann & Barnard, Inc.

a. Free-draining mesh inserts made from polyester.
b. Height of weep shall match height of specified masonry veneer (up to 4-inches nominal). Use the 4-inch nominal height weep at 8-inches or higher masonry veneer units.
c. Color as selected by Architect from full range of standard and special colors, and to match the associated mortar color.

3. Hohmann & Barnard, Inc., QV-Quadro-Vent.

a. Polypropylene tested in conformance with ASTM D2240, D790B, D638 and D1238B.
b. Honeycomb design.
c. Color as selected by Architect from full range of standard and special colors, and to match the associated mortar color.
d. Size according to associated masonry veneer units.

H. Termination Bars: Stainless steel, Type 304, 1-1/2-inches x 8-foot-long x 26 ga. bar with Foam-Tite Seal and 3/8-inch caulking flange; bar punched to accept fasteners at 8-inches o.c.

1. Basis of Design Product: Hohmann & Barnard, Inc. T2 termination bar or equal product.

I. Cavity Air Barrier (Installed over C.M.U. above exterior grade): Continuous, single component, asphalt free, fluid applied, vapor permeable self-sealing elastomeric air barrier membrane that permits moisture vapor to escape through the membrane while remaining resistant to water and air penetration per ASTM E2178, ASTM E96 and ASTM E2357. Apply over C.M.U. at 60 square foot (25-mils wet) per gallon. Air barrier must be compatible with contacted surfaces and materials including cavity insulation.

1. Basis of Design Product: Enviro-Barrier VP™, Sandell Moisture Protection Systems; Hohmann & Barnard, Inc. Subject to compliance with specified requirements, the following products are also acceptable.

a. Air Bloc 17MR, Henry, a Carlisle Company.
b. Perm-A-Barrier VPL, GCP Applied Technologies.
c. Fire Resist Barritech VP, Henry, a Carlisle Company.

J. Vapor Retarder (Installed over C.M.U. below exterior grade, at interior floor slab elevation changes, and where noted or detailed): Continuous, fluid applied, asphalt based non-fibered emulsion-type damp proofing which permits moisture vapor to escape through the membrane while remaining resistant to water and air penetration per ASTM D1187, ASTM D1227, E2178, ASTM E96, and ASTM E2357. Damp proofing must be compatible with contacted surfaces and materials including cavity insulation.

1. Products: Type based on application method. Subject to compliance with specified requirements, products that may be incorporated into the Work include, but are not limited to, the following:

a. Karnak, 100AF Non-filtered Emulsion Damp proofing, Karnak Corporation.
b. Sealmastic Emulsion, Non-fibered Emulsion Damp proofing, W.R. Meadows.

K. Cavity Air Barrier (Installed over gypsum or plywood sheathing): Continuous, single component, asphalt free, fluid applied, vapor-permeable self-sealing elastomeric air barrier membrane that permits moisture vapor to escape through the membrane while remaining resistant to water and air penetration per ASTM E2178, ASTM E96 and ASTM E2357. Apply over exterior gypsum sheathing at 75 square foot (20-mils wet) per gallon. Must be compatible with contacted surfaces and materials including cavity insulation.

1. Basis of Design Product: Enviro-Barrier VP™, Sandell Moisture Protection Systems; Hohmann & Barnard, Inc. Subject to compliance with specified requirements, the following products are also acceptable.

a. Air Bloc 31MR, Henry Company.
b. Perm-A-Barrier VPL, GCP Applied Technologies.
c. Fire Resist Barritech VP, Carlisle Coatings & Waterproofing.

L. Cavity Air Barrier Accessories (Installed with C.M.U. and gypsum sheathing): For use in detailing transitions between dissimilar materials, cracks and voids, window and door openings, etc.

1. Products: Basis of Design products by Hohmann & Barnard include the following:

   a. Enviro-Barrier™ Mastic, gun grade mastic; Sandell Moisture Protection Systems by Hohmann & Barnard, Inc.
   b. Stretch-X-Seal Membrane, a flexible self-sealing adhesive backed with release liner, transition membrane flashing and sill tape; Sandell Moisture Protection Systems, by Hohmann & Barnard, Inc.
   c. Spray-Tape™, a water based single component self-sealing spray or brush-applied detail flashing for air barriers applied at 100 square feet (60-mils wet) per gallon, a minimum of 3-inches around the opening and a minimum of 3-inches into the opening; Sandell Moisture Protection Systems, by Hohmann & Barnard, Inc.

2. Subject to compliance with specified requirements, equal products by the following manufacturers are also acceptable.

   a. Accessories manufactured by Henry Company.
   b. Accessories manufactured by GCP Applied Technologies.
   c. Accessories manufactured by Carlisle Coatings & Waterproofing.

M. Cavity Insulation (Installed over C.M.U.): Square edge extruded polystyrene insulation board, 16-inches x 96-inches, complying with ASTM C578, Type IV with a compressive strength of 25 psi. Install with manufacturer's standard board joint sealing system.

1. Products: Provide one of the following:

   a. Foamular 250, Owens-Corning Co.
   b. Styrofoam Cavitymate or Scoreboard, DuPont (formerly DOW Chemical Co.).

N. Cavity Insulation (Installed over gypsum sheathing): Shiplap or tongue and groove edged extruded-polystyrene board, 48-inches x 96-inches, complying with ASTM C578, Type IV with a compressive strength 25 psi. Install with manufacturer's standard board joint sealing system.

1. Products: Provide one of the following:

   a. Foamular 250, Owens-Corning Co.
   b. Cavitymate SC, Dow Chemical Co.

O. Insulation Inserts (Installed in cores of C.M.U. for single wythe masonry installations): Individually molded, expanded polystyrene inserts with a minimum density of 1.05 lbs./cf, a thermal resistance of 5.0 per inch of thickness at 75° F, and complying with ASTM C578 Standard Type X. Insert into each C.M.U. core.

1. ICON Universal Inserts, as produced by Concrete Block Insulating Systems, Inc./Korfil or equal product.

P. Gypsum Sheathing: Unless specifically specified or required otherwise on the Structural drawings for structural reasons such as sheer properties, the below specified exterior gypsum sheathing for wall cavity assemblies takes precedence over any Divisions 6 or 9 specified products . Gypsum sheathing complying with ASTM C1177 and ASTM E84 with glass mats both sides and long edges, water-resistant treated core.

1. Dens-Glass Gold Sheathing, Georgia-Pacific.

2.14 MASONRY CLEANERS

A. Proprietary Acidic Cleaner: Manufacturer's standard-strength cleaner designed for removing mortar and grout stains, efflorescence, and other new construction stains from new masonry without discoloring or damaging masonry surfaces. Use product expressly approved for intended use by cleaner manufacturer and manufacturer of masonry units being cleaned. Follow brick manufacturer's recommendations for cleaning solution for each brick type.

1. Available Products: Subject to compliance with specified requirements, products that may be used to clean unit masonry surfaces include, but are not limited to, the following:

a. Cleaners for Red and Light-Colored Brick Not Subject to Metallic Staining with Mortar and Not Subject to Bleaching:

1) 202 New Masonry Detergent; Diedrich Technologies, Inc.
2) Sure Klean No. 600 Detergent; PROSOCO, Inc.

b. Cleaners for Red and Dark-Colored Brick Not Subject to Metallic Staining:

1) 200 Lime Solv; Diedrich Technologies, Inc.
2) Sure Klean No. 101 Lime Solvent; PROSOCO., Inc.

c. Cleaners for Brick Subject to Metallic Staining:

1) 202V Vana-Stop; Diedrich Technologies, Inc.
2) Sure Klean Vana Trol; PROSOCO, Inc.

2.15 SOURCE QUALITY CONTROL

A. Brick Tests: For each type and grade of brick indicated, meet the requirements in the "Face Brick" Paragraph of this Section. Units will be tested according to ASTM C67.

B. Concrete Masonry Unit Tests: For each type of concrete masonry unit indicated, meet the requirements in the "Concrete Masonry Units" Paragraph of this Section. Units will be tested according to ASTM C140.

PART 3 - EXECUTION

3.1 EXAMINATION

A. Examine conditions with Installer present for compliance with all specified requirements for installation tolerances and other conditions affecting performance of the Work. Proceeding with installation of the Work of this Section acknowledges acceptance of conditions.

1. For the record, prepare written report, endorsed by Installer, listing conditions detrimental to performance.
2. Verify that foundations are within tolerances specified.
3. Verify that reinforcing dowels are properly placed.
4. Verify that all specified and detailed structural requirements that precede the work of this section are properly satisfied.
5. Proceed with installation only after unsatisfactory conditions have been corrected.

B. Before installation, examine rough-in and built-in construction of preceding work to verify compliance with Project requirements.

C. Coordinate with the simultaneous work of others to assure all required built in piping, conduit and other items specified to be installed in a concealed manner are properly concealed.

3.2 INSTALLATION, GENERAL

A. Unit Masonry Assemblies shall be installed in accordance with the Contract Documents, and the most recent technical standards published by the International Masonry Institute, the National Concrete Masonry Association, the Brick Industry Association and the product manufacturer's printed recommendations.

B. Thickness: Build cavity and composite walls and other masonry construction to the full thickness shown. Build single wythe walls to the actual widths of masonry units, using units of widths indicated.

C. Build chases and recesses into the Work to accommodate items specified in this Section and in other Sections of the Specifications.

D. Leave openings for equipment to be installed before completing masonry. After installing equipment, complete masonry to match the construction immediately adjacent to the opening.

E. Cut masonry units with motor-driven saws to provide clean, sharp, unchipped edges. Cut units as required to provide a continuous pattern and to fit adjoining construction. Where possible, use full-size units without cutting. Allow units cut with water-cooled saws to dry before placing, unless wetting of units is specified. Install cut units with cut surfaces and, where possible, cut edges concealed.

F. Select and arrange units for exposed unit masonry to produce a uniform blend of colors and textures.

1. Mix units from several pallets or cubes as they are placed.

G. Wetting of Clay Brick: Wet clay brick 3 to 24 hours before laying if the initial rate of absorption exceeds 20 g/30 sq. in. per minute when tested per ASTM C67. Allow units to absorb water so they are damp but not wet at the time of laying.

H. **NO CONDUIT OR PIPING SHALL BE INSTALLED VERTICALLY OR HORIZONTALLY IN MASONRY CAVITIES**. Penetrations through the cavity are permitted for items such as wall hydrants, electrical fixtures and devices, etc. but they shall be horizontal, perpendicular through the cavity, and located directly at the intended item.

I. In new construction, unless specifically specified otherwise or approved in writing in advance by Architect, NO exposed conduit will be acceptable in finished spaces.

J. Install air barrier systems per manufacturer's printed instructions.

K. Install insulation board systems per manufacturer's printed instructions.

L. In lieu of field-formed flashing corners and end dams, preformed stainless steel corners and end dams may be used at Contractor's option. All products shall be compatible with the flashing system and shall be installed per the manufacturer's recommended printed instructions in addition to the sealing requirements described in the specification.

M. Install single wythe masonry flashing per manufacturer's printed instructions.

3.3 CONSTRUCTION TOLERANCES

A. Comply with tolerances specified in ACI 530.1/ASCE 6/TMS 602 and the following:

1. For conspicuous vertical lines such as external corners, door jambs, reveals, and expansion and control joints, do not vary from plumb by more than 1/4-inch in 20 feet, or 1/2-inch maximum.
2. For vertical alignment of exposed head joints, do not vary from plumb by more than 1/4-inch in 10 feet, or 1/2-inch maximum.
3. For conspicuous horizontal lines such as exposed lintels, sills, parapets, and reveals, do not vary from level by more than 1/4-inch in 20 feet, or 1/2-inch maximum.
4. For exposed bed joints, do not vary from thickness indicated by more than 1/8-inch with a maximum thickness limited to 1/2-inch. Do not vary from bed-joint thickness of adjacent courses by more than 1/8-inch.
5. For exposed head joints, do not vary from thickness indicated by more than 1/8-inch. Do not vary from adjacent bed-joint and head-joint thicknesses by more than 1/8-inch.

3.4 LAYING MASONRY WALLS

A. Lay out walls in advance for accurate spacing of surface bond patterns with uniform joint thicknesses and for accurate location of openings, movement-type joints, returns, and offsets. Avoid using less-than-half-size units, particularly at corners, jambs, and, where possible, at other locations.

B. Bond Pattern for Exposed Masonry: Lay exposed masonry in the following bond pattern; do not use units with less than nominal 4-inch horizontal face dimensions at corners or jambs.

1. One-half running bond with vertical joints in each course centered on units in courses above and below.

a. One-half running bond pattern applies to all standard and painted CMU, to decorative CMU installations, and to modular brick infills where matching adjacent existing patterns.

2. One-third running bond with vertical joints in each third course aligning vertically.

a. One-third running bond pattern applies to all utility sized brick installations.

C. Lay concealed masonry with all units in a wythe in running bond or bonded by lapping not less than 2-inches. Bond and interlock each course of each wythe at corners. Do not use units with less than nominal 4-inch horizontal face dimensions at corners or jambs.

D. Stopping and Resuming Work: In each course, rack back one-half-unit length for one-half running bond or one-third-unit length for one-third running bond; do not tooth. Clean exposed surfaces of set masonry, wet clay masonry units lightly if required and remove loose masonry units and mortar before laying fresh masonry.

E. Built-in Work: As construction progresses, build in items specified under this and other Sections of the Specifications. Fill in solidly with masonry around built-in items.

F. Fill space between hollow-metal frames and masonry solidly with mortar, unless otherwise indicated.

G. Fill cores in hollow concrete masonry units with grout a minimum of 24 inches under bearing plates, beams, lintels, posts, and similar items, unless otherwise indicated on the Structural drawings.

H. Entire courses and/or individual units of irregular surface faced masonry (i.e., split-face masonry units) shall be turned smooth side out in locations as directed by Architect during Preinstallation Conference.

I. Build non-load-bearing interior partitions full height of story to underside of solid floor or roof deck above, unless otherwise indicated.

1. Install compressible filler in joint between top of partition and underside of deck above.
2. At fire-rated partitions, install firestopping in joint between top of partition and underside of deck above to comply with Division 7 Section “Through Penetration Firestop Systems.”

3.5 MORTAR BEDDING AND JOINTING

A. Lay hollow masonry units as follows:

1. With full mortar coverage on horizontal and vertical face shells.
2. Bed webs in mortar in starting course on footings and in all courses of piers, columns, and pilasters, and where adjacent to cells or cavities to be filled with grout.
3. For starting course on footings where cells are not grouted, spread out full mortar bed, including areas under cells.

B. Lay solid brick-size masonry units with completely filled bed and head joints; butter ends with sufficient mortar to fill head joints and compress into place. Do not deeply furrow bed joints or slush head joints.

1. At cavity walls, bevel beds away from cavity to minimize mortar protrusions into cavity. As work progresses, trowel mortar fins protruding into cavity flat against the cavity face of the brick.

C. Set stone trim units in full bed of mortar with vertical joints slushed full. Fill dowel, anchor, and similar holes solid. Wet stone joint surface thoroughly before setting; for soiled stone surfaces, clean bedding and exposed surfaces with fiber brush and soap powder and rinse thoroughly with clear water.

D. Site Wall Copings (including cast stone and concrete): Set copings on canted stainless-steel flashing (drip plate flashing) with continuous hemmed drip edge at all faces of wall (length and ends). Install drip plate flashing on sloped mortar bed. Seal laps between lengths of drip plate flashing with lap sealant overlapped a minimum of 4-inches. Secure copings to wall with a kerfed split tail anchor mechanically attached to top of wall. Set anchors on a membrane patch and fill anchor kerfs between coping pieces with sealant. Shim copings as required for level and alignment. Tool a 3/8-inch sealant joint between coping and the top of drip plate flashing below providing for weeps every 4-feet. Seal all skyward facing and vertical joints in coping material with joint sealant.

E. Sill Units (including cast stone, concrete and masonry): Tool skyward facing and vertical joints to a point 3/8-inches below the top face of the sill material. Apply a continuous sealant bead in the tooled joints. Sealant to match mortar color. At brick sills, tool exposed joints to match adjacent joints. Tool joints between weeps.

F. Unless otherwise indicated, tool exposed joints slightly concave when thumbprint hard using a jointer larger than the joint thickness.

G. Collar Joints in Clay Tile Masonry: After each course is laid, fill the vertical, longitudinal joint between wythes solidly with grout at exterior walls, except cavity walls, and solidly with mortar at interior walls and partitions.

3.6 BONDING OF MULTI-WYTHE MASONRY

A. General: Use masonry joint reinforcement installed in horizontal mortar joints to bond wythes together.

B. Corners: Provide interlocking masonry unit bond in each wythe and course at corners unless otherwise indicated.

1. Provide continuity with masonry joint reinforcement at corners by using prefabricated "L" units as well as masonry bonding.

C. Intersecting and Abutting Walls: Unless vertical expansion or control joints are shown at juncture, bond walls together as follows:

1. Provide continuity with masonry joint reinforcement by using prefabricated "T" units.

3.7 CAVITIES

A. Keep cavities clean of mortar droppings and other materials during construction. Strike joints of back-up wall wythes flush where facing cavities.

B. Installing Cavity-Wall Insulation: Apply rectangular grid adhesive on inside face of insulation boards. Fit courses of insulation between wall ties and other confining obstructions in cavity, with edges butted tightly both ways. Install boards with manufacturer approved sealant in all board joints. Press units firmly against inside wythe of masonry or other construction as shown.

1. Seal all cracks and gaps, piping and conduit penetrations with manufacturer approved materials compatible with insulation and masonry.
2. All insulation board joints and penetrations shall be sealed with manufacturer's approved joint sealant systems to meet the air barrier requirements of ASTM E2357 Assembly Test and the International Code Council (ICC-ES) Evaluation Report ESR-2142.

C. Wall assembly for ASTM C578 polystyrene foam plastic insulation board shall meet the requirements of NFPA 285 Wall Assembly.

3.8 MASONRY JOINT REINFORCEMENT

A. General: Provide continuous masonry joint reinforcement as indicated. Install entire length of longitudinal side rods in mortar with a minimum cover of 5/8-inch on exterior side of walls and 1/2-inch elsewhere. Lap reinforcement a minimum of 6-inches.

1. Space reinforcement not more than 16-inches o.c.
2. Space reinforcement not more than 8-inches o.c. at foundation walls and parapet walls.

a. Reinforcement above is in addition to continuous reinforcement.

B. Cut or interrupt joint reinforcement at control and expansion joints, unless otherwise indicated.

C. Provide continuity at corners and wall intersections by using prefabricated "L" and "T" sections. Cut and bend reinforcing units as directed by manufacturer for continuity at returns, offsets, column fireproofing, pipe enclosures, and other special conditions.

D. At all flashing locations, reinforcement shall not interrupt the flashing.

3.9 ANCHORING MASONRY TO STRUCTURAL MEMBERS

A. Anchor masonry to structural members where masonry abuts or faces structural members. Comply with the following:

1. Anchor masonry to structural members with flexible channel slot anchors embedded in masonry joints and attached to the structure. Provide a 1-inch space in width between

masonry and structural member unless otherwise indicated. Keep open space free of mortar or other rigid materials.

2. Space anchors at location of slotted channel anchor assembly on the structural member.

3.10 CONTROL AND EXPANSION JOINTS

A. General: Install control and expansion joints in unit masonry where indicated, or if not indicated, in accordance with acceptable best practice procedures. Build-in related items as masonry work progresses. Do not form a continuous span through movement joints unless provisions are made to prevent in-plane restraint of wall or partition movement.

B. Form control joints in concrete masonry as detailed on Drawings or by one of the following approved methods:

1. Fit bond-breaker strips into hollow contour in ends of concrete masonry units on one side of control joint. Fill resultant core with grout and rake joints in exposed faces. **Maximum distance between C.M.U. control joints shall not exceed 25 feet or distances as indicated on Structural drawings**.
2. Install preformed control-joint gaskets designed to fit sash block.
3. **Submit for approval a method as recommended by current technical standards published by Industry standards as noted in Section 3.2.A above.**

C. Form building expansion joints in exterior masonry veneer as follows:

1. Form open joint of width indicated; install compressible exterior expansion joint filler per manufacturers' recommendations. Keep joint free and clear of mortar. Install at locations indicated on Drawings.

D. Build in pressure-relieving expansion joints where indicated; construct joints by installing compressible expansion material.

3.11 LINTELS

A. Install lintels where indicated.

B. Provide lintels at all masonry wall openings greater than 12 inches wide. Refer to Structural drawings and Lintel Schedule.

1. Not all required lintels are shown on Drawings. Prior to submitting a Bid, Contractor shall be responsible to review the entire set of Contract Documents for required openings, i.e., for ductwork, louvers, etc. and shall refer to the requirements for opening widths found in the Lintel Schedule.

3.12 AIR BARRIER SYSTEM

A. Composite Masonry Walls and Cavity Walls: Apply cavity air barrier system on the entire exterior face of the inner wythe of masonry (behind the insulation board) to form a monolithic

membrane on the cavity wall. Air barrier accessories and transition membranes shall be installed as detailed and/or required by system manufacturer over all dissimilar material transitions such as wood blocking, structural framing, cracks and voids, door and window openings and any other construction elements that will prevent a continuous monolithic membrane. Follow manufacturers recommended installation procedures. System shall meet the requirements of the International Energy Conservation Code (IECC) ASTM E2357 Air Assembly Test.

B. Metal Stud Masonry Veneer Walls: Apply cavity air barrier system on the entire exterior face of the metal stud wall sheathing (behind the insulation board). Air-barrier accessories and transition membranes shall be installed as detailed and/or required by system manufacturer over all dissimilar material transitions such as wood blocking, structural framing, cracks and voids, door and window openings and any other construction elements that will prevent a continuous monolithic membrane. Follow manufacturers recommended installation procedures. System shall meet the requirements of the International Energy Conservation Code (IECC) ASTM E2357 Air Assembly Test.

3.13 FLASHING, WEEPS, AND VENTS

A. General: In addition to base-of-wall flashing, install continuous thru-wall flashing and weeps in composite masonry walls at all shelf angles, lintels, sills, ledges, and other obstructions to downward flow of water in wall. All flashing applications shall be installed in accordance with details on Drawings and using all manufacturer's standard accessory products.

B. Prepare masonry surfaces so they are smooth and free from projections that could puncture flashing. Unless otherwise indicated, place through-wall flashing on sloping bed of mortar. Seal overlaps and transitions in flashing with adhesive, sealant or tape as recommended by flashing manufacturer.

C. Install flashing as follows:

1a. <u>Insulated Composite Masonry Wall Base Flashing Conditions:</u> Adhere the specified stainless steel drip plate to the bedding joint of the veneer masonry with manufacturer's approved moisture cure sealant creating a 1/4-inch drip flange, as detailed. Seal all laps between lengths of drip plate with lap sealant overlapped a minimum of 4-inches. The drip flange of one of the overlapping pieces shall be cut back so that only the concealed portion of the drip plate overlaps. The drip flange portions of adjacent drip plates shall be neatly abutted to eliminate sharp edges. At outside corners, miter the drip flange portion of the drip plate to form a neatly abutted corner. Beginning at a point 1-inch in from the exterior face of the veneer masonry, adhere the specified laminated stainless-steel flashing to the top of the drip plate with manufacturer's approved non-asphaltic adhesive, mastic or bonding tape. All inside and outside corners shall be flashed with manufacturer's preformed stainless-steel corners. Seal all laps between lengths of the flashing material, and all transitions to the preformed corners with manufacturer's approved lap sealant, overlapped a minimum of 4-inches. Extend the flashing material back working from the drip plate back to the outer face of the inner wythe of masonry then fold and turn the flashing material up a minimum of 8-inches (behind the insulation and over the specified air barrier system) and secure it at 8-inches o.c. to the outer face

of the inner wythe of masonry with the specified stainless-steel termination bar. Install a continuous bead of elastomeric sealant in the angled sealant flange. Within the cavity, angle the flashing material downward toward the veneer masonry to provide for positive drainage to the weeps. Install transition membranes as required at all corners, obstructions, and other interferences in the cavity to assure a continuous and watertight flashing installation. Install all accessory components including, but not limited to, weeps, vents, cavity drainage material, etc. in accordance with details on Drawings and with subparagraph D below.

1b. Insulated Metal Stud with Masonry Veneer Base Flashing Conditions: Adhere the specified stainless steel drip plate to the bedding joint of the veneer masonry with manufacturer's approved moisture cure sealant creating a 1/4-inch drip flange, as detailed. Seal all laps between lengths of drip plate with lap sealant overlapped a minimum of 4-inches. The drip flange of one of the overlapping pieces shall be cut back so that only the concealed portion of the drip plate overlaps. The drip flange portions of adjacent drip plates shall be neatly abutted to eliminate sharp edges. At outside corners, miter the drip flange portion of the drip plate to form a neatly abutted corner. Beginning at a point 1-inch in from the exterior face of the veneer masonry, adhere the specified laminated stainless-steel flashing to the top of the drip plate with manufacturer's approved non-asphaltic adhesive, mastic or bonding tape. All inside and outside corners shall be flashed with manufacturer's preformed stainless-steel corners. Seal all laps between lengths of the flashing material, and all transitions to the preformed corners with manufacturer's approved lap sealant, overlapped a minimum of 4-inches. Extend the flashing material back working from the drip plate back to the face of the wall sheathing. Fold and turn the flashing up a minimum of 8-inches (behind the insulation and over the specified air barrier system) and secure it to the metal wall framing at each stud with the specified stainless-steel termination bar. Install a continuous bead of elastomeric sealant in the angled sealant flange. Within the cavity, angle the flashing material downward toward the veneer masonry to provide for positive drainage to the weeps. Install transition membranes as required at all corners, obstructions, and other interferences in the cavity to assure a continuous and watertight flashing installation. Install all accessory components including, but not limited to, weeps, vents, cavity drainage material, etc. in accordance with details on Drawings and with subparagraph D below.

1c. Masonry Relieving Angles in Insulated Composite Walls: Follow the installation methods prescribed above for either insulated composite masonry walls (method 1a) or insulated metal stud walls with masonry veneer (method 1b) but in addition, at masonry relieving angles, install backer rod and sealant under the metal drip plate drip flange.

1d. Masonry Opening Sill Flashing Conditions: Adhere the specified stainless steel drip plate to the bedding joint of the veneer masonry located directly below the exterior sill with manufacturer's approved moisture cure sealant creating a 1/4-inch drip flange, as detailed. Seal all laps between lengths of drip plate (if any) with lap sealant overlapped a minimum of 4-inches. The drip flange of one of the overlapping pieces shall be cut back so that only the concealed portion of the drip plate overlaps. The drip flange portions of adjacent drip plates shall be neatly abutted to eliminate sharp edges. Beginning at a point 1-inch in from the exterior face of the veneer masonry, adhere the specified laminated stainless-steel flashing to the top of the drip plate with manufacturer's approved non-asphaltic adhesive, mastic or bonding tape. Seal all laps between lengths of the flashing material (if any) with manufacturer's approved lap sealant, overlapped a minimum of 4-

inches. Extend the flashing material working back from the drip plate and turn it up vertically behind the sill, then continue it horizontally below the window frame sill to a point 1-inch from the inside face of the window frame. Extend the flashing material at the sill ends and turn the ends up not less than 2-inches to form a pan. Install the specified air barrier behind the flashing. Provide positive drainage to weeps where the bottom of the flashing turns out to the veneer masonry. At precast concrete or stone sills, install the specified weeps horizontally laid flat on top of the flashing material at 16-inches o.c. At brick sills, install sill weeps vertically at 16-inches o.c. Equally space the weeps along the length of the sill and tool the joints. At sill blocking, provide Hohmann & Barnard, Inc. #345 SV and at jamb blocking provide Hohmann & Barnard, Inc. #345-BT veneer anchors as specified and as detailed on Drawings. Space and secure anchors horizontally and vertically at 16-inches o.c. Install transition membranes as required at all jambs and sills and at any obstructions and other interferences in the cavity to assure a continuous and watertight flashing installation.

2. Lintels and Shelf Angles in Insulated Composite Walls: Adhere the specified stainless steel drip plate to the top of the lintel plate of the veneer masonry with manufacturer's approved moisture cure sealant creating a 1/4-inch drip flange, as detailed. Seal all laps between lengths of drip plate (if any) with lap sealant overlapped a minimum of 4-inches. The drip flange of one of the overlapping pieces shall be cut back so that only the concealed portion of the drip plate overlaps. The drip flange portions of adjacent drip plates shall be neatly abutted to eliminate sharp edges. At outside corners, miter the drip flange portion of the drip plate to form a neatly abutted corner. Beginning at a point 1-inch in from the exterior face of the veneer masonry, adhere the specified laminated stainless-steel flashing to the top of the drip plate with manufacturer's approved non-asphaltic adhesive, mastic or bonding tape. All inside and outside corners shall be flashed with manufacturer's preformed stainless-steel corners. Seal all laps between lengths of the flashing material (if any), and all transitions to the preformed corners (if any) with manufacturer's approved lap sealant, overlapped a minimum of 4-inches. Extend the flashing material back working from the drip plate back to the outer face of the inner wythe of masonry then fold and turn the flashing material up a minimum of 8-inches (behind the insulation and over the specified air barrier system) and secure it at 8-inches o.c. to the outer face of the inner wythe of masonry with the specified stainless-steel termination bar. Install a continuous bead of elastomeric sealant in the angled sealant flange. Extend the flashing a minimum of 4-inches into the masonry at each end or to cover the full length of the lintel, whichever is greater. At heads and sills, extend the flashing at the ends and turn the flashing up not less than 2-inches to form a pan. Seal all laps between lengths of the membrane flashing with manufacturer's approved lap sealant overlapped a minimum of 4-inches. Within the cavity, provide positive drainage to the weeps. where the bottom of the flashing turns out to the outer wythe of the masonry. Install backer rod and sealant under the metal drip plate. Install transition membranes as required at all corners, obstructions, and other interferences in the cavity to assure a continuous and watertight flashing installation. Install all accessory components including, but not limited to, weeps, vents, cavity drainage material, etc. in accordance with details on Drawings and with subparagraph D below.

3a. Low Roof to High Wall Conditions at Insulated Composite Masonry Walls: Adhere a two-piece interlocking type, 26-gauge stainless-steel sheet flashing to the bedding joint of the veneer masonry with manufacturer's approved moisture cure sealant, as detailed. Extend

the embedded sheet metal flashing back to the outer face of the inner wythe of masonry and turn it up a minimum of 2-inches to form a pan (behind the insulation). Seal all laps between lengths of sheet flashing with lap sealant overlapped a minimum of 6-inches. The extended portion of one of the overlapping pieces of sheet flashing shall be cut back so that only the concealed portion of the flashing overlaps. The extended portions of adjacent sheet flashings shall be neatly abutted to eliminate sharp edges. Beginning at a point 1-inch in from the exterior face of the veneer masonry, adhere the specified laminated stainless-steel flashing to the top of the embedded flashing with manufacturer's approved non-asphaltic adhesive, mastic or bonding tape. All inside and outside corners shall be flashed with manufacturer's preformed stainless-steel corners. Seal all laps between lengths of the flashing material, and all transitions to the preformed corners with manufacturer's approved lap sealant, overlapped a minimum of 4-inches. Extend the flashing material back working from the veneer masonry back to the outer face of the inner wythe of masonry then fold and turn the flashing material up a minimum of 8-inches (behind the insulation and over the specified air barrier system) and secure it at 8-inches o.c. to the outer face of the inner wythe of masonry with the specified stainless-steel termination bar. Install a continuous bead of elastomeric sealant in the angled sealant flange. Within the cavity, angle the flashing material downward toward the veneer masonry to provide for positive drainage to the weeps. Install transition membranes as required at all corners, obstructions, and other interferences in the cavity to assure a continuous and watertight flashing installation. Install all accessory components including, but not limited to, weeps, vents, cavity drainage material, etc. in accordance with details on Drawings and with subparagraph D below. Install the interlocking piece of flashing over the roof termination as detailed on Drawings. The seams of the interlocking flashing and the embedded portion of the two-piece sheet metal flashing shall be offset a minimum of 18-inches.

3b. <u>Low Roof to High Wall Conditions at Insulated Metal Stud/Masonry Veneer Walls:</u> Adhere a two-piece interlocking type, 26-gauge stainless-steel sheet flashing to the bedding joint of the veneer masonry with manufacturer's approved moisture cure sealant, as detailed. Extend the embedded sheet metal flashing back to the outside face of the cavity sheathing and turn it up a minimum of 2-inches to form a pan (behind the insulation).Seal all laps between lengths of sheet flashing with lap sealant overlapped a minimum of 6-inches. The extended portion of one of the overlapping pieces of sheet flashing shall be cut back so that only the concealed portion of the flashing overlaps. The extended portions of adjacent sheet flashings shall be neatly abutted to eliminate sharp edges. Beginning at a point 1-inch in from the exterior face of the veneer masonry, adhere the specified laminated stainless-steel flashing to the top of the embedded flashing with manufacturer's approved non-asphaltic adhesive, mastic or bonding tape. All inside and outside corners shall be flashed with manufacturer's preformed stainless-steel corners. Seal all laps between lengths of the flashing material, and all transitions to the preformed corners with manufacturer's approved lap sealant, overlapped a minimum of 4-inches. Extend the flashing material back working from the veneer masonry back to the outside face of the cavity sheathing then fold and turn the flashing material up a minimum of 8-inches (behind the insulation and over the specified air barrier system) and secure it to the metal wall framing at each stud with the specified stainless-steel termination bar. Install a continuous bead of elastomeric sealant in the angled sealant flange. Within the cavity, angle the flashing material downward toward the veneer masonry to provide for

positive drainage to the weeps. Install transition membranes as required at all corners, obstructions, and other interferences in the cavity to assure a continuous and watertight flashing installation. Install all accessory components including, but not limited to, weeps, vents, cavity drainage material, etc. in accordance with details on Drawings and with subparagraph D below. Install the interlocking piece of flashing over the roof termination as detailed on Drawings. The seams of the interlocking flashing and the embedded portion of the two-piece sheet metal flashing shall be offset a minimum of 18-inches.

D. Install cavity weeps, cavity vents, sill sweeps and cavity drainage material in the head joints in exterior wythes of masonry as indicated on Drawings and as follows:

1. Space cavity weeps at 24-inches o.c. for both modular and utility sized brick veneer units and at 32-inches o.c. for decorative concrete masonry veneer units.
2. Space cavity vents at minimum 48-inches o.c.
3. Install weep material horizontally on top of flashing at all sills.
4. Place continuous cavity drainage material immediately above flashing in cavities.
5. Test weep with water poured into cavity to insure draining water freely comes out of each weep hole.

E. Install reglets and nailers for flashing and other related construction where shown to be built into masonry.

3.14 REINFORCED UNIT MASONRY INSTALLATION

A. Temporary Formwork and Shores: Construct formwork and shores to support reinforced masonry elements during construction.

1. Construct formwork to conform to shape, line, and dimensions shown. Make the formwork sufficiently tight to prevent leakage of mortar and grout. Brace, tie, and support forms to maintain position and shape during construction and curing of reinforced masonry.
2. Do not remove forms and shores until reinforced masonry members have hardened sufficiently to carry their own weight and other temporary loads that may be placed on them during construction.

B. Placing Reinforcement: Comply with requirements of ACI 530.1/ASCE 6/TMS 602.

C. Grouting: Do not place grout until entire height of masonry to be grouted has attained sufficient strength to resist grout pressure.

1. Comply with requirements of ACI 530.1/ASCE 6/TMS 602 for cleanouts and for grout placement, including minimum grout space and maximum pour height.

3.15 FIELD QUALITY CONTROL

A. Owner will engage a qualified independent testing agency to perform all required field quality-control testing services, including IBC Special Inspections.

1. Contractor shall coordinate with and provide all support services required by Owner's testing agency including, but not limited to, collecting mortar and grout samples, providing samples of other materials for testing, and providing access to the Work.

3.16 REPAIRING, POINTING, AND CLEANING

A. Remove and replace masonry units that are loose, chipped, broken, stained, or otherwise damaged or that do not match adjoining units. Install new units to match adjoining units; install in fresh mortar, pointed to eliminate evidence of replacement.

B. Pointing: During the tooling of joints, enlarge voids and holes, except weep holes, and completely fill with mortar. Point up joints, including corners, openings, and adjacent construction to provide a neat, uniform appearance. Prepare joints for sealant application.

C. In-Progress Cleaning: Clean unit masonry as work progresses by dry brushing to remove mortar fins and smears before tooling joints.

D. Final Cleaning: After mortar is thoroughly set and cured, clean exposed masonry as follows:

1. Remove large mortar particles by hand with wooden paddles and nonmetallic scrape hoes or chisels.
2. Test cleaning methods on sample wall panel; leave one-half of panel uncleaned for comparison purposes. Obtain Architect's approval of sample cleaning before proceeding with cleaning of masonry.
3. Protect adjacent stone and non-masonry surfaces from contact with cleaner by covering them with liquid strippable masking agent, polyethylene film, or waterproof masking tape.
4. Wet wall surfaces with water before applying cleaners; remove cleaners promptly by rinsing the surfaces thoroughly with clear water.
5. Clean brick by the bucket-and-brush hand-cleaning method described in BIA Technical Notes No. 20, using job-mixed detergent solution.
6. Clean masonry with a proprietary acidic cleaner applied according to manufacturer's written instructions.
7. Clean concrete masonry by cleaning method indicated in NCMA TEK 8-2 applicable to type of stain on exposed surfaces.

3.17 MASONRY WASTE DISPOSAL

A. Unless otherwise indicated, excess masonry materials are Contractor's property. At completion of unit masonry work, remove from Project site.

END OF SECTION 042000

SECTION 047200 - CAST STONE MASONRY

PART 1 - GENERAL

1.1 RELATED DOCUMENTS

A. Drawings and general provisions of the Contract, including General and Supplementary Conditions and Division 01 Specification Sections, apply to this Section.

1.2 SUMMARY

A. Section Includes:

1. Cast-stone trim of shapes indicated on the Drawings, which may include, but not be limited to, sills, curbs, bases, caps and copings.

B. Related Section: Division 4 Section "Unit Masonry Assemblies" for installing cast stone units in unit masonry.

1.3 ACTION SUBMITTALS

A. Product Data: For each type of product.

1. For cast-stone units, include construction details, material descriptions, dimensions of individual components and profiles, and finishes.

B. Sustainable Design Submittals: Refer to Division 1 Section "LEED Requirements."

C. Shop Drawings: Show fabrication and installation details for cast-stone units. Include dimensions, details of reinforcement and anchorages if any, and indication of finished faces.

1. Include building elevations showing layout of units and locations of joints and anchors.

D. Samples for Initial Selection: For colored mortar.

E. Samples for Verification: For each color and texture of cast stone required, 10 inches square in size.

1.4 INFORMATIONAL SUBMITTALS

A. Qualification Data: For manufacturer.

1. Include copies of material test reports for completed projects, indicating compliance of cast stone with ASTM C 1364.

B. Material Test Reports: For each mix required to produce cast stone, based on testing according to ASTM C 1364, including test for resistance to freezing and thawing.

1.5 QUALITY ASSURANCE

A. Manufacturer Qualifications: A qualified manufacturer of cast-stone units similar to those indicated for this Project that has sufficient production capacity to manufacture required units, and is a plant certified by the Cast Stone Institute or the Architectural Precast Association.

B. Testing Agency Qualifications: Qualified according to ASTM E 329 for testing indicated.

C. Mockups: If directed by the Architect, furnish cast stone for installation in mockups specified in Division 4 Section "Unit Masonry Assemblies."

1.6 DELIVERY, STORAGE, AND HANDLING

A. Coordinate delivery of cast stone with unit masonry work to avoid delaying the Work and to minimize the need for on-site storage.

B. Pack, handle, and ship cast-stone units in suitable packs or pallets.

1. Lift with wide-belt slings; do not use wire rope or ropes that might cause staining or wearing. Move cast-stone units if required, using dollies with wood supports.
2. Store cast-stone units on wood skids or pallets with nonstaining, waterproof covers, securely tied. Arrange to distribute weight evenly and to prevent damage to units. Ventilate under covers to prevent condensation.

C. Store cementitious materials on elevated platforms, under cover, and in a dry location. Do not use cementitious materials that have become damp.

D. Store mortar aggregates where grading and other required characteristics can be maintained and contamination can be avoided.

1.7 PROJECT CONDITIONS

A. Cold-Weather Requirements: Do not use frozen materials or materials mixed or coated with ice or frost. Do not build on frozen substrates. Comply with cold-weather construction requirements in TMS 602/ACI 530.1/ASCE 6.

1. Cold-Weather Cleaning: Use liquid cleaning methods only when air temperature is 40 deg F and above and will remain so until cast stone has dried, but no fewer than seven days after completing cleaning.

B. Hot-Weather Requirements: Comply with hot-weather construction requirements in TMS 602/ACI 530.1/ASCE 6.

PART 2 - PRODUCTS

2.1 MANUFACTURERS

A. Source Limitations for Cast Stone: Obtain cast-stone units from single source from single manufacturer.

2.2 CAST-STONE MATERIALS

A. General: Comply with ASTM C 1364.

B. Portland Cement: ASTM C 150/C 150M, Type I or Type III, containing not more than 0.60 percent total alkali when tested according to ASTM C 114. Provide natural color or white cement as required to produce cast-stone color indicated.

C. Coarse Aggregates: Granite, quartz, or limestone complying with ASTM C 33; gradation and colors as needed to produce required cast-stone textures and colors.

D. Fine Aggregates: Natural sand or crushed stone complying with ASTM C 33, gradation and colors as needed to produce required cast-stone textures and colors.

E. Color Pigment: ASTM C 979/C 979M, synthetic mineral-oxide pigments or colored water-reducing admixtures; color stable, free of carbon black, nonfading, and resistant to lime and other alkalis.

F. Admixtures: Use only admixtures specified or approved in writing by Architect.

1. Do not use admixtures that contain more than 0.1 percent water-soluble chloride ions by mass of cementitious materials. Do not use admixtures containing calcium chloride.
2. Use only admixtures that are certified by manufacturer to be compatible with cement and other admixtures used.
3. Air-Entraining Admixture: ASTM C 260.
4. Water-Reducing Admixture: ASTM C 494, Type A.
5. Water-Reducing, Retarding Admixture: ASTM C 494, Type D.
6. Water-Reducing, Accelerating Admixture: ASTM C 494, Type E.

G. Reinforcement: Deformed steel bars complying with ASTM A 615, Grade 60. Use galvanized or epoxy-coated reinforcement when covered with less than 1-1/2 inches of cast-stone material.

1. Epoxy Coating: ASTM A 775.
2. Galvanized Coating: ASTM A 767.

H. Embedded Anchors and Other Inserts: Fabricated from stainless steel complying with ASTM A 240, ASTM A 276, or ASTM A 666, Type 304.

2.3 CAST-STONE UNITS

A. Available Manufacturers: Subject to compliance with requirements, manufacturers that may be incorporated in the Work include, but are not limited to, the following:

1. Sun Precast Co., Inc.
2. Advanced Architectural Stone; Advanced Cast Stone (Girard, PA plant).
3. Continental Cast Stone (West Berlin, NJ plant).
4. Corinthian Cast Stone, Inc.
5. Brentano's Cast Stone.
6. Stafford Stone Works, LLC.
7. David Kucera, Inc.
8. Faddis Concrete Products.
9. Cast Stone Systems, Inc.
10. Arban Precast Stone, LTD.
11. Reading Rock, Inc.

B. Cast-Stone Units: Comply with ASTM C 1364.

1. Units shall be manufactured using the wet-cast method.
2. Units shall be resistant to freezing and thawing as determined by laboratory testing according to ASTM C 666, Procedure A, as modified by ASTM C 1364.

C. Fabricate units with sharp arris and accurately reproduced details, with indicated texture on all exposed surfaces unless otherwise indicated.

1. Slope exposed horizontal surfaces 1:12 to drain unless otherwise indicated.
2. Provide raised fillets at backs of sills and at ends indicated to be built into jambs.
3. Provide drips on projecting elements unless otherwise indicated.

D. Fabrication Tolerances:

1. Variation in Cross Section: Do not vary from indicated dimensions by more than 1/8 inch.
2. Variation in Length: Do not vary from indicated dimensions by more than 1/360 of the length of unit or 1/8 inch, whichever is greater, but in no case by more than 1/4 inch.
3. Warp, Bow, and Twist: Not to exceed 1/360 of the length of unit or 1/8 inch, whichever is greater.
4. Location of Grooves, False Joints, Holes, Anchorages, and Similar Features: Do not vary from indicated position by more than 1/8 inch on formed surfaces of units and 3/8 inch on unformed surfaces.

E. Cure Units as Follows:

1. Cure units in enclosed, moist curing room at 95 to 100 percent relative humidity and temperature of 100 deg F for 12 hours or 70 deg F for 16 hours.

2. Keep units damp and continue curing to comply with one of the following:

a. No fewer than five days at mean daily temperature of 70 deg F or above.
b. No fewer than six days at mean daily temperature of 60 deg F or above.
c. No fewer than seven days at mean daily temperature of 50 deg F or above.
d. No fewer than eight days at mean daily temperature of 45 deg F or above.

F. Acid etch units after curing to remove cement film from surfaces to be exposed to view.

G. Colors and Textures: Match existing units or as selected by Architect from manufacturer's full range.

H. Colors and Textures: Provide units with fine-grained texture and buff color resembling smooth-finished or sand-rubbed Indiana limestone.

2.4 MORTAR MATERIALS

A. Provide mortar materials that comply with Division 4 Section "Unit Masonry Assemblies."

2.5 ACCESSORIES

A. Anchors: Type and size indicated, fabricated from Type 304 stainless steel complying with ASTM A 240, ASTM A 276, or ASTM A 666.

B. Dowels: 1/2-inch-diameter round bars, fabricated from Type 304 stainless steel complying with ASTM A 240, ASTM A 276, or ASTM A 666.

C. Proprietary Acidic Cleaner: Manufacturer's standard-strength cleaner designed for removing mortar/grout stains, efflorescence, and other new construction stains from new masonry without discoloring or damaging masonry surfaces. Use product expressly approved for intended use by cast-stone manufacturer and expressly approved by cleaner manufacturer for use on cast stone and adjacent masonry materials.

2.6 MORTAR MIXES

A. Comply with requirements in Section 042000 "Unit Masonry" for mortar mixes.

PART 3 - EXECUTION

3.1 EXAMINATION

A. Examine substrates and conditions, with Installer present, for compliance with requirements for installation tolerances and other conditions affecting performance of the Work.

B. Proceed with installation only after unsatisfactory conditions have been corrected.

3.2 SETTING CAST STONE IN MORTAR

A. Install cast-stone units to comply with requirements in Division 4 Section "Unit Masonry Assemblies."

B. Set cast stone as indicated on Drawings. Set units accurately in locations indicated, with edges and faces aligned according to established relationships and indicated tolerances.

1. Install anchors, supports, fasteners, and other attachments indicated or necessary to secure units in place.
2. Coordinate installation of cast stone with installation of flashing specified in other Sections.

C. Wet joint surfaces thoroughly before applying mortar or setting in mortar.

D. Set units in full bed of mortar with full head joints unless otherwise indicated.

1. Set units with joints 3/8 to 1/2 inch wide unless otherwise indicated.
2. Build anchors and ties into mortar joints as units are set.
3. Fill dowel holes and anchor slots with mortar.
4. Build concealed flashing into mortar joints as units are set.
5. Keep head joints in copings and between other units with exposed horizontal surfaces open to receive sealant.
6. Keep joints at shelf angles open to receive sealant.

E. Rake out joints for pointing with mortar to profiles and depths to match unit masonry assemblies, unless otherwise indicated by the Architect. Scrub faces of units to remove excess mortar as joints are raked.

F. Point mortar joints by placing and compacting mortar in layers not greater than 3/8 inch. Compact each layer thoroughly and allow it to become thumbprint hard before applying next layer.

G. Tool exposed joints slightly concave when thumbprint hard. Use a smooth plastic jointer larger than joint thickness.

H. Where indicated, rake out joints for pointing with sealant to depths of not less than 3/4 inch. Scrub faces of units to remove excess mortar as joints are raked.

I. Where indicated, point joints with sealant to comply with applicable requirements in Division 7 Section "Joint Sealants."

1. Prime cast-stone surfaces to receive sealant and install compressible backer rod in joints before applying sealant unless otherwise indicated.

J. Provide sealant joints at head joints of copings and other horizontal surfaces; at expansion, control, and pressure-relieving joints; and at locations indicated.

1. Keep joints free of mortar and other rigid materials.

2. Build in compressible foam-plastic joint fillers where indicated.
3. Form joint of width indicated, but not less than 3/8 inch.
4. Prime cast-stone surfaces to receive sealant and install compressible backer rod in joints before applying sealant unless otherwise indicated.
5. Prepare and apply sealant of type and at locations indicated to comply with applicable requirements in Division 7 Section "Joint Sealants."

K. Prepare and apply sealant of type and at locations indicated to comply with applicable requirements in Section 079200 "Joint Sealants."

3.3 INSTALLATION TOLERANCES

A. Variation from Plumb: Do not exceed 1/8 inch in 10 feet, 1/4 inch in 20 feet or 1/2 inch maximum.

B. Variation from Level: Do not exceed 1/8 inch in 10 feet, 1/4 inch in 20 feet, or 1/2 inch maximum.

C. Variation in Joint Width: Do not vary joint thickness more than 1/8 inch in 36 inches or one-fourth of nominal joint width, whichever is less.

D. Variation in Plane between Adjacent Surfaces (Lipping): Do not vary from flush alignment with adjacent units or adjacent surfaces indicated to be flush with units by more than 1/16 inch, except where variation is due to warpage of units within tolerances specified.

3.4 ADJUSTING AND CLEANING

A. Remove and replace stained and otherwise damaged units and units not matching approved Samples. Cast stone may be repaired if methods and results are approved by Architect.

B. Replace units in a manner that results in cast stone matching approved Samples, complying with other requirements, and showing no evidence of replacement.

C. In-Progress Cleaning: Clean cast stone as work progresses.

1. Remove mortar fins and smears before tooling joints.
2. Remove excess sealant immediately, including spills, smears, and spatter.

D. Final Cleaning: After mortar is thoroughly set and cured, clean exposed cast stone as follows:

1. Remove large mortar particles by hand with wooden paddles and nonmetallic scrape hoes or chisels.
2. Test cleaning methods on sample; leave one sample uncleaned for comparison purposes. Obtain Architect's approval of sample cleaning before proceeding with cleaning of cast stone.
3. Protect adjacent surfaces from contact with cleaner by covering them with liquid strippable masking agent or polyethylene film and waterproof masking tape.

4. Wet surfaces with water before applying cleaners; remove cleaners promptly by rinsing thoroughly with clear water.
5. Clean cast stone by bucket-and-brush hand-cleaning method described in BIA Technical Notes 20.
6. Clean cast stone with proprietary acidic cleaner applied according to manufacturer's written instructions.

END OF SECTION 047200

SECTION 051200 - STRUCTURAL STEEL FRAMING

PART 1 - GENERAL

1.1 RELATED DOCUMENTS

A. Drawings and general provisions of the Contract, including General and Supplementary Conditions and Division 01 Specification Sections, apply to this Section.

1.2 SUMMARY

A. Section Includes:

1. Structural steel.
2. Shrinkage-resistant grout.

B. Related Requirements:

1. Section 053100 "Steel Decking" for field installation of shear stud connectors through deck.
2. Section 055000 "Metal Fabrications" for [steel lintels and shelf angles not attached to structural-steel frame miscellaneous steel fabrications and other steel items not defined as structural steel.
3. Section 099113 "Exterior Painting" and Section 099123 "Interior Painting"

1.3 DEFINITIONS

A. Structural Steel: Elements of the structural frame indicated on Drawings and as described in ANSI/AISC 303.

1.4 COORDINATION

A. Coordinate selection of shop primers with topcoats to be applied over them. Comply with paint and coating manufacturers' written recommendations to ensure that shop primers and topcoats are compatible with one another.

B. Coordinate installation of anchorage items to be embedded in or attached to other construction without delaying the Work. Provide setting diagrams, sheet metal templates, instructions, and directions for installation.

1.5 PREINSTALLATION MEETINGS

A. Preinstallation Conference: Conduct conference at Project site.

1.6 ACTION SUBMITTALS

A. Product Data: For each type of product.

B. Shop Drawings: Show fabrication of structural-steel components.

1. Include details of cuts, connections, splices, camber, holes, and other pertinent data.
2. Include embedment Drawings.
3. Indicate welds by standard AWS symbols, distinguishing between shop and field welds, and show size, length, and type of each weld. Show backing bars that are to be removed and supplemental fillet welds where backing bars are to remain.
4. Indicate type, size, and length of bolts, distinguishing between shop and field bolts. Identify pretensioned and slip-critical, high-strength bolted connections.

C. Welding Procedure Specifications (WPSs) and Procedure Qualification Records (PQRs): Provide in accordance with AWS D1.1/D1.1M for each welded joint whether prequalified or qualified by testing, including the following:

1. Power source (constant current or constant voltage).
2. Electrode manufacturer and trade name, for demand-critical welds.

D. Delegated-Design Submittal: For structural-steel connections indicated on Drawings to comply with design loads, include analysis data signed and sealed by the qualified professional engineer responsible for their preparation and licensed in the appropriate state.

1.7 INFORMATIONAL SUBMITTALS

A. Qualification Data: For Installer and fabricator

B. Welding certificates.

C. Paint Compatibility Certificates: From manufacturers of topcoats applied over shop primers, certifying that shop primers are compatible with topcoats.

D. Mill test reports for structural-steel materials, including chemical and physical properties.

E. Product Test Reports: For the following:

1. Bolts, nuts, and washers, including mechanical properties and chemical analysis.
2. Direct-tension indicators.
3. Tension-control, high-strength, bolt-nut-washer assemblies.
4. Shear stud connectors.
5. Nonshrink grout.
6. Structural steel including chemical and physical properties.

F. Source quality-control reports.

G. Field quality-control reports and special inspection reports.

1.8 QUALITY ASSURANCE

A. Fabricator Qualifications: A qualified fabricator that participates in the AISC Quality Certification Program and is designated an AISC-Certified Plant OR has 5 or more years of experience in similar sized projects.

B. Installer Qualifications: A qualified installer that participates in the AISC Quality Program OR has 5 or more years of experience in similar sized projects.

C. Shop-Painting Applicators: Qualified in accordance with AISC's Sophisticated Paint or to SSPC-QP 3.

D. Welding Qualifications: Qualify procedures and personnel in accordance with AWS D1.1/D1.1M.

1.9 DELIVERY, STORAGE, AND HANDLING

A. Store materials to permit easy access for inspection and identification. Keep steel members off ground and spaced by using pallets, dunnage, or other supports and spacers. Protect steel members and packaged materials from corrosion and deterioration.

1. Do not store materials on structure in a manner that might cause distortion, damage, or overload to members or supporting structures. Repair or replace damaged materials or structures as directed.

B. Store materials out of direct sunlight or insulate to ensure that beams and other members do not expand in the heat prior to be welded to bearing walls. Expanded beams that contract after installation can cause damage to the masonry walls local to the bearing plates. Such damage will require repair at no additional cost to the owner.

C. Store fasteners in a protected place in sealed containers with manufacturer's labels intact.

1. Fasteners may be repackaged provided Owner's testing and inspecting agency observes repackaging and seals containers.
2. Clean and relubricate bolts and nuts that become dry or rusty before use.
3. Comply with manufacturers' written recommendations for cleaning and lubricating ASTM F3125/F3125M, Grade F1852 bolt assemblies and for retesting bolt assemblies after lubrication.

PART 2 - PRODUCTS

2.1 PERFORMANCE REQUIREMENTS

A. Comply with applicable provisions of the following specifications and documents:

1. ANSI/AISC 303.
2. ANSI/AISC 341.
3. ANSI/AISC 360.
4. RCSC's "Specification for Structural Joints Using High-Strength Bolts."

B. Connection Design Information:

1. Design connections and final configuration of member reinforcement at connections in accordance with ANSI/AISC 303 by fabricator's qualified professional engineer.

a. Use Allowable Stress Design; data are given at service-load level.

C. Moment Connections Type FR, fully restrained.

D. Construction: Combined system of moment frame and shear walls.

2.2 STRUCTURAL-STEEL MATERIALS

A. W-Shapes: ASTM A992/A992M].

B. Channels, Angles: ASTM A36/A36M..

C. Plate and Bar: ASTM A36/A36M or ASTM A572/A572M, Grade 50 (345) as required for connection design.

D. Cold-Formed Hollow Structural Sections: ASTM A500/A500M, Grade C structural tubing.

E. Welding Electrodes: Comply with AWS requirements.

2.3 BOLTS AND CONNECTORS

A. High-Strength A325 Bolts, Nuts, and Washers: ASTM F3125/F3125M, Grade A325 (Grade A325M), Type 1, heavy-hex steel structural bolts; ASTM A563, Grade DH (ASTM A563M, Class 10S), heavy-hex carbon-steel nuts; and ASTM F436/F436M, Type 1, hardened carbon-steel washers; all with plain finish.

1. Direct-Tension Indicators: ASTM F959/F959M, Type 325-1 (Type 8.8-1), compressible-washer type with plain finish.

B. Tension-Control, High-Strength Bolt-Nut-Washer Assemblies: ASTM F3125/F3125M, Grade F1852, Type 1, round head assemblies, consisting of steel structural bolts with splined

ends; ASTM A563, Grade DH (ASTM A563M, Class 10S), heavy-hex carbon-steel nuts; and ASTM F436/F436M, Type 1, hardened carbon-steel washers.

1. Finish: Plain.

C. Shear Stud Connectors: ASTM A108, AISI C-1015 through C-1020, headed-stud type, cold-finished carbon steel; AWS D1.1/D1.1M, Type B.

2.4 RODS

A. Unheaded Anchor Rods: ASTM F1554, Grade 36

1. Configuration: Straight.
2. Nuts: ASTM A563 (ASTM A563M) heavy hex carbon steel.
3. Plate Washers: ASTM A36/A36M carbon steel.
4. Washers: ASTM F436 (ASTM F436M), Type 1, hardened carbon steel.
5. Finish: Plain or Hot-dip zinc coating, ASTM A153/A153M, Class C for exterior exposed columns.

B. Threaded Rods: ASTM A36/A36M

1. Nuts: ASTM A 63 (ASTM A563M) hex carbon steel.
2. Washers: ASTM F436 (ASTM F436M), Type 1, hardened
3. Finish: Plain

2.5 PRIMER

A. Steel Primer:

1. Comply with [Section 099113 "Exterior Painting" and Section 099123 "Interior Painting." Section 099600 "High-Performance Coatings."
2. SSPC-Paint 23, latex primer.
3. Fabricator's standard lead- and chromate-free, nonasphaltic, rust-inhibiting primer complying with MPI#79 and compatible with topcoat.

B. Galvanized-Steel Primer: MPI#26

1. Etching Cleaner: MPI#25, for galvanized steel.
2. Galvanizing Repair Paint: ASTM A780/A780M.

2.6 SHRINKAGE-RESISTANT GROUT

A. Nonmetallic, Shrinkage-Resistant Grout: ASTM C1107/C1107M, factory-packaged, nonmetallic aggregate grout, noncorrosive and nonstaining, mixed with water to consistency suitable for application and a 30-minute working time.

2.7 FABRICATION

A. Structural Steel: Fabricate and assemble in shop to greatest extent possible. Fabricate in accordance with ANSI/AISC 303 and to ANSI/AISC 360.

1. Camber structural-steel members where indicated.
2. Fabricate beams with rolling camber up.
3. Identify high-strength structural steel in accordance with ASTM A6/A6M and maintain markings until structural-steel framing has been erected.
4. Mark and match-mark materials for field assembly.
5. Complete structural-steel assemblies, including welding of units, before starting shop-priming operations.

B. Thermal Cutting: Perform thermal cutting by machine to greatest extent possible.

1. Plane thermally cut edges to be welded to comply with requirements in AWS D1.1/D1.1M.

C. Bolt Holes: Cut, drill, or punch standard bolt holes perpendicular to metal surfaces.

D. Finishing: Accurately finish ends of columns and other members transmitting bearing loads.

E. Cleaning: Clean and prepare steel surfaces that are to remain unpainted in accordance with **SSPC-SP 2.**

F. Shear Stud Connectors: Prepare steel surfaces as recommended by manufacturer of shear connectors. Weld using automatic end welding of headed-stud shear connectors in accordance with AWS D1.1/D1.1M and manufacturer's written instructions.

G. Holes: Provide holes required for securing other work to structural steel and for other work to pass through steel members.

1. Cut, drill, or punch holes perpendicular to steel surfaces. Do not thermally cut bolt holes or enlarge holes by burning.
2. Baseplate Holes: Cut, drill, mechanically thermal cut, or punch holes perpendicular to steel surfaces.
3. Weld threaded nuts to framing and other specialty items indicated to receive other work.

2.8 SHOP CONNECTIONS

A. High-Strength Bolts: Shop install high-strength bolts in accordance with RCSC's "Specification for Structural Joints Using High-Strength Bolts" for type of bolt and type of joint specified.

1. Joint Type: Snug tightened

B. Weld Connections: Comply with AWS D1.1/D1.1M and AWS D1.8/D1.8M for tolerances, appearances, welding procedure specifications, weld quality, and methods used in correcting welding work.

1. Assemble and weld built-up sections by methods that maintain true alignment of axes without exceeding tolerances in ANSI/AISC 303 for mill material.

2. All visually exposed HSS beam to HSS column connections shall be welded all around and ground smooth.

2.9 GALVANIZING

A. Hot-Dip Galvanized Finish: Apply zinc coating by the hot-dip process to structural steel in accordance with ASTM A123/A123M.

1. Fill vent and drain holes that are exposed in the finished Work unless they function as weep holes, by plugging with zinc solder and filing off smooth.
2. Galvanize lintels and shelf angles attached to structural-steel frame and located in exterior walls.
3. Galvanize all exterior columns including all base connection material and anchor rods.

2.10 SHOP PRIMING

A. Shop prime steel surfaces, except the following:

1. Surfaces embedded in concrete or mortar. Extend priming of partially embedded members to a depth of 2 inches (50 mm).
2. Surfaces to be field welded.
3. Surfaces of high-strength bolted, slip-critical connections.
4. Surfaces to receive sprayed fire-resistive materials (applied fireproofing).
5. Galvanized surfaces unless indicated to be painted.
6. Surfaces enclosed in interior construction.

B. Surface Preparation of Steel: Clean surfaces to be painted. Remove loose rust and mill scale and spatter, slag, or flux deposits. Prepare surfaces in accordance with the following specifications and standards:

2.11 SOURCE QUALITY CONTROL

A. Testing Agency: Owner will engage a qualified testing agency to perform shop tests and inspections.

1. Allow testing agency access to places where structural-steel work is being fabricated or produced to perform tests and inspections.
2. Bolted Connections: Inspect and test shop-bolted connections in accordance with RCSC's "Specification for Structural Joints Using High-Strength Bolts."

3. Welded Connections: Visually inspect shop-welded connections in accordance with AWS D1.1/D1.1M and the following inspection procedures, at testing agency's option:

    a. Liquid Penetrant Inspection: ASTM E165/E165M.
    b. Magnetic Particle Inspection: ASTM E709; performed on root pass and on finished weld. Cracks or zones of incomplete fusion or penetration are not accepted.
    c. Ultrasonic Inspection: ASTM E164.
    d. Radiographic Inspection: ASTM E94/E94M.

4. In addition to visual inspection, test and inspect shop-welded shear stud connectors in accordance with requirements in AWS D1.1/D1.1M for stud welding and as follows:

    a. Perform bend tests if visual inspections reveal either a less-than-continuous 360-degree flash or welding repairs to any shear stud connector.
    b. Conduct tests in accordance with requirements in AWS D1.1/D1.1M on additional shear stud connectors if weld fracture occurs on shear stud connectors already tested.

5. Prepare test and inspection reports.

PART 3 - EXECUTION

3.1 EXAMINATION

A. Verify, with certified steel erector present, elevations of concrete- and masonry-bearing surfaces and locations of anchor rods, bearing plates, and other embedments for compliance with requirements.

    1. Prepare a certified survey of existing conditions. Include bearing surfaces, anchor rods, bearing plates, and other embedments showing dimensions, locations, angles, and elevations.

B. Proceed with installation only after unsatisfactory conditions have been corrected.

3.2 PREPARATION

A. Provide temporary shores, guys, braces, and other supports during erection to keep structural steel secure, plumb, and in alignment against temporary construction loads and loads equal in intensity to design loads. Remove temporary supports when permanent structural steel, connections, and bracing are in place unless otherwise indicated on Drawings.

    1. Do not remove temporary shoring supporting structural-steel framing until cast-in-place concrete has attained its design compressive strength.

3.3 ERECTION

A. Set structural steel accurately in locations and to elevations indicated and in accordance with ANSI/AISC 303 and ANSI/AISC 360.

B. Baseplates Bearing Plates and Leveling Plates: Clean concrete- and masonry-bearing surfaces of bond-reducing materials, and roughen surfaces prior to setting plates. Clean bottom surface of plates.

1. Set plates for structural members on wedges, shims, or setting nuts as required.
2. Weld plate washers to top of baseplate.
3. **Snug-tighten** anchor rods after supported members have been positioned and plumbed. Do not remove wedges or shims but, if protruding, cut off flush with edge of plate before packing with grout.
4. Promptly pack shrinkage-resistant grout solidly between bearing surfaces and plates, so no voids remain. Neatly finish exposed surfaces; protect grout and allow to cure. Comply with manufacturer's written installation instructions for grouting.

C. Maintain erection tolerances of structural steel within ANSI/AISC 303.

D. Align and adjust various members that form part of complete frame or structure before permanently fastening. Before assembly, clean bearing surfaces and other surfaces that are in permanent contact with members. Perform necessary adjustments to compensate for discrepancies in elevations and alignment.

1. Level and plumb individual members of structure. Slope roof framing members to slopes indicated on Drawings.
2. Make allowances for difference between temperature at time of erection and mean temperature when structure is completed and in service.

E. Splice members only where indicated.

F. Do not use thermal cutting during erection unless approved by Architect. Finish thermally cut sections within smoothness limits in AWS D1.1/D1.1M.

G. Do not enlarge unfair holes in members by burning or using drift pins. Ream holes that must be enlarged to admit bolts.

3.4 FIELD CONNECTIONS

A. High-Strength Bolts: Install high-strength bolts in accordance with RCSC's "Specification for Structural Joints Using High-Strength Bolts" for bolt and joint type specified.

1. Joint Type: Snug tightened or Pretensioned

B. Weld Connections: Comply with AWS D1.1/D1.1M and AWS D1.8/D1.8M for tolerances, appearances, welding procedure specifications, weld quality, and methods used in correcting welding work.

1. Comply with ANSI/AISC 303 and ANSI/AISC 360 for bearing, alignment, adequacy of temporary connections, and removal of paint on surfaces adjacent to field welds.
2. Remove backing bars or runoff tabs where indicated or exposed to view, back gouge, and grind steel smooth.
3. Assemble and weld built-up sections by methods that maintain true alignment of axes without exceeding tolerances in ANSI/AISC 303 for mill material.

3.5 FIELD QUALITY CONTROL

A. Special Inspections: Owner will engage a special inspector to perform the following special inspections:

1. Verify structural-steel materials and inspect steel frame joint details.
2. Verify weld materials and inspect welds.
3. Verify connection materials and inspect high-strength bolted connections.

B. Testing Agency: Owner will engage a qualified testing agency to perform tests and inspections.

1. Bolted Connections: Inspect bolted connections in accordance with RCSC's "Specification for Structural Joints Using High-Strength Bolts."
2. Welded Connections: Visually inspect field welds in accordance with AWS D1.1/D1.1M.

a. In addition to visual inspection, test and inspect field welds in accordance with AWS D1.1/D1.1M and the following inspection procedures, at testing agency's option:

1) Liquid Penetrant Inspection: ASTM E165/E165M.
2) Magnetic Particle Inspection: ASTM E709; performed on root pass and on finished weld. Cracks or zones of incomplete fusion or penetration are not accepted.
3) Ultrasonic Inspection: ASTM E164.
4) Radiographic Inspection: ASTM E94/E94M.

3.6 PROTECTION

A. Galvanized Surfaces: Clean areas where galvanizing is damaged or missing, and repair galvanizing to comply with ASTM A780/A780M.

B. Touchup Painting: Immediately after erection, clean exposed areas where primer is damaged or missing, and paint with the same material as used for shop painting to comply with SSPC-PA 1 for touching up shop-painted surfaces.

1. Clean and prepare surfaces by SSPC-SP 2 hand-tool cleaning or SSPC-SP 3 power-tool cleaning.

C. Touchup Painting: Cleaning and touchup painting are specified in Section 099113 "Exterior Painting." Section 099123 "Interior Painting."

D. Touchup Priming: Cleaning and touchup priming are specified in Section 099600 "High-Performance Coatings."

END OF SECTION 051200

SECTION 052100 - STEEL JOIST FRAMING

PART 1 - GENERAL

1.1 RELATED DOCUMENTS

A. Drawings and general provisions of the Contract, including General and Supplementary Conditions and Division 01 Specification Sections, apply to this Section.

1.2 SUMMARY

A. Section Includes:

1. K-series steel joists.
2. KCS-type K-series steel joists.
3. K-series steel joist substitutes.
4. LH- and DLH-series long-span steel joists.
5. Joist accessories.

B. Related Requirements:

1. Section 033000 "Cast-in-Place Concrete" for installing bearing plates in concrete.
2. Section 042000 "Unit Masonry" for installing bearing plates in unit masonry.
3. Section 051200 "Structural Steel Framing" for field-welded shear connectors.

1.3 DEFINITIONS

A. SJI's "Specifications": Steel Joist Institute's "Standard Specifications, Load Tables and Weight Tables for Steel Joists and Joist Girders."

B. Special Joists: Steel joists requiring modification by manufacturer to support non-uniform, unequal, or special loading conditions that invalidate load tables in SJI's "Specifications."

1.4 ACTION SUBMITTALS

A. Product Data: For each type of joist, accessory, and product.

B. Shop Drawings:

1. Include layout, designation, number, type, location, and spacing of joists.
2. Include joining and anchorage details; bracing, bridging, and joist accessories; splice and connection locations and details; and attachments to other construction.
3. Indicate locations and details of bearing plates to be embedded in other construction.

1.5 INFORMATIONAL SUBMITTALS

A. Qualification Data: For manufacturer

B. Welding certificates.

C. Manufacturer certificates.

D. Mill Certificates: For each type of bolt.

E. Comprehensive engineering analysis of special joists signed and sealed by the qualified professional engineer responsible for its preparation.

F. Field quality-control reports.

1.6 QUALITY ASSURANCE

A. Manufacturer Qualifications: A manufacturer certified by SJI to manufacture joists complying with applicable standard specifications and load tables in SJI's "Specifications."" and "Standard Specification for Composite Steel Joists, CJ-Series" in "Standard Specifications for Composite Steel Joists, Weight Tables and Bridging Tables, Code of Standard Practice."

1. Manufacturer's responsibilities include providing professional engineering services for designing special joists to comply with performance requirements.

B. Welding Qualifications: Qualify field-welding procedures and personnel according to AWS D1.1/D1.1M, "Structural Welding Code - Steel."

1.7 DELIVERY, STORAGE, AND HANDLING

A. Deliver, store, and handle joists as recommended in SJI's "Specifications."" and "Standard Specification for Composite Steel Joists, CJ-Series" in "Standard Specifications for Composite Steel Joists, Weight Tables and Bridging Tables, Code of Standard Practice."

B. Protect joists from corrosion, deformation, and other damage during delivery, storage, and handling.

1.8 SEQUENCING

A. Deliver steel bearing plates to be built into cast-in-place concrete and masonry construction.

PART 2 - PRODUCTS

2.1 PERFORMANCE REQUIREMENTS

A. Structural Performance: Provide special joists and connections capable of withstanding design loads indicated.

1. Use ASD; data are given at service-load level
2. Design special joists to withstand design loads with live-load deflections no greater than the following:

a. Floor Joists: Vertical deflection of 1/360 of the span.
b. Roof Joists: Vertical deflection of 1/360 of the span.

2.2 K-SERIES STEEL JOISTS

A. Manufacture steel joists of type indicated according to "Standard Specification for Open Web Steel Joists, K-Series" in SJI's "Specifications," with steel-angle top- and bottom-chord members, underslung ends, and parallel top chord.

1. Joist Type: K-series steel joists and KCS-type K-series steel joists.

B. Steel Joist Substitutes: Manufacture according to "Standard Specifications for Open Web Steel Joists, K-Series" in SJI's "Specifications," with steel-angle or -channel members.

C. Provide holes in chord members for connecting and securing other construction to joists.

D. Top-Chord Extensions: Extend top chords of joists with SJI's Type S top-chord extensions where indicated, complying with SJI's "Specifications."

E. Extended Ends: Extend bearing ends of joists with SJI's Type R extended ends where indicated, complying with SJI's "Specifications."

F. Camber joists according to SJI's "Specifications.".

G. Equip bearing ends of joists with manufacturer's standard beveled ends or sloped shoes if joist slope exceeds 1/4 inch per 12 inches (1:48).

2.3 LONG-SPAN STEEL JOISTS

A. Manufacture steel joists according to "Standard Specification for Longspan Steel Joists, LH-Series and Deep Longspan Steel Joists, DLH-Series" in SJI's "Specifications," with steel-angle top- and bottom-chord members; of joist type and end and top-chord arrangements as follows: as indicated.

1. Joist Type: LH-series steel joists and DLH-series steel joists.
2. End Arrangement: Underslung.

3. Top-Chord Arrangement: Parallel or Pitched 1/4 inch per 12 inches, two ways as indicated on drawings.

B. Provide holes in chord members for connecting and securing other construction to joists.

C. Camber long-span steel joists according to SJI's "Specifications.".

D. Equip bearing ends of joists with manufacturer's standard beveled ends or sloped shoes if joist slope exceeds 1/4 inch per 12 inches (1:48).

2.4 PRIMERS

A. Primer: SSPC-Paint 15, or manufacturer's standard shop primer complying with performance requirements in SSPC-Paint 15.

B. Primer: Provide shop primer that complies with Section 099123 "Interior Painting." where exposed to view.

2.5 JOIST ACCESSORIES

A. Bridging: Provide bridging anchors and number of rows of horizontal or diagonal bridging of material, size, and type required by SJI's "Specifications for type of joist, chord size, spacing, and span. Furnish additional erection bridging if required for stability.

B. Bridging: Schematically indicated. Detail and fabricate according to SJI's "Specifications. Furnish additional erection or uplift bridging if required for stability.

C. Fabricate steel bearing plates from ASTM A36/A36M steel with integral anchorages of sizes and thicknesses indicated.

D. Furnish ceiling extensions, either extended bottom-chord elements or a separate extension unit of enough strength to support ceiling construction. Extend ends to within 1/2 inch (13 mm) of finished wall surface unless otherwise indicated.

1. Finish: Plain, uncoated.

E. High-Strength Bolts, Nuts, and Washers: ASTM F3125/F3125M,Grade A325 (Grade A325M), Type 1, heavy-hex steel structural bolts; ASTM A563, Grade DH, (ASTM A563M, Class 10S) heavy-hex carbon-steel nuts; and ASTM F436/F436M, Type 1, hardened carbon-steel washers.

1. Finish: Plain.

F. Welding Electrodes: Comply with AWS standards.

G. Galvanizing Repair Paint: ASTM A780/A780M.

H. Furnish miscellaneous accessories including splice plates and bolts required by joist manufacturer to complete joist assembly.

2.6 CLEANING AND SHOP PAINTING

A. Clean and remove loose scale, heavy rust, and other foreign materials from fabricated joists and accessories by hand-tool cleaning, SSPC-SP 2.

B. Do not prime paint joists and accessories to receive sprayed fire-resistive materials.

C. Apply one coat of shop primer to joists and joist accessories to be primed to provide a continuous, dry paint film not less than 1 mil (0.025 mm) thick.

D. Shop priming of joists and joist accessories is specified in and Section 099123 "Interior Painting."

PART 3 - EXECUTION

3.1 EXAMINATION

A. Examine supporting substrates, embedded bearing plates, and abutting structural framing for compliance with requirements for installation tolerances and other conditions affecting performance of the Work.

B. Proceed with installation only after unsatisfactory conditions have been corrected.

3.2 INSTALLATION

A. Do not install joists until supporting construction is in place and secured.

B. Install joists and accessories plumb, square, and true to line; securely fasten to supporting construction according to SJI's "Specifications joist manufacturer's written instructions, and requirements in this Section.

1. Before installation, splice joists delivered to Project site in more than one piece.
2. Space, adjust, and align joists accurately in location before permanently fastening.
3. Install temporary bracing and erection bridging, connections, and anchors to ensure that joists are stabilized during construction.
4. Delay rigidly connecting bottom-chord extensions to columns or supports until dead loads are applied. See drawings for joists to be used in moment frames.

C. Field weld joists to supporting steel bearing plates and framework. Coordinate welding sequence and procedure with placement of joists. Comply with AWS requirements and procedures for welding, appearance and quality of welds, and methods used in correcting welding work.

D. Bolt joists to supporting steel framework only as required using carbon-steel bolts.

E. Bolt joists to supporting steel framework using high-strength structural bolts. Comply with RCSC's "Specification for Structural Joints Using ASTM A325 or ASTM A490 Bolts" for high-strength structural bolt installation and tightening requirements.

F. Install and connect bridging concurrently with joist erection, before construction loads are applied. Anchor ends of bridging lines at top and bottom chords if terminating at walls or beams.

3.3 FIELD QUALITY CONTROL

A. Testing Agency: Owner will engage a qualified testing agency to perform tests and inspections.

B. Visually inspect field welds according to AWS D1.1/D1.1M.

1. In addition to visual inspection, test field welds according to AWS D1.1/D1.1M and the following procedures, at testing agency's option:

a. Liquid Penetrant Inspection: ASTM E165/E165M.
b. Magnetic Particle Inspection: ASTM E709.
c. Ultrasonic Testing: ASTM E164.
d. Radiographic Testing: ASTM E94.

C. Visually inspect bolted connections.

D. Prepare test and inspection reports.

3.4 PROTECTION

A. Repair damaged galvanized coatings on galvanized items with galvanized repair paint according to ASTM A780/A780M and manufacturer's written instructions.

B. Touchup Painting: After installation, promptly clean, prepare, and prime or reprime field connections, rust spots, and abraded surfaces of prime-painted joists, **abutting structural steel** and accessories.

1. Clean and prepare surfaces by hand-tool cleaning according to SSPC-SP 2 or power-tool cleaning according to SSPC-SP 3.
2. Apply a compatible primer of same type as primer used on adjacent surfaces.

C. Touchup Painting: Cleaning and touchup painting are specified in [Section 099113 "Exterior Painting" and Section 099123 "Interior Painting." Section 099600 "High-Performance Coatings."

END OF SECTION 052100

SECTION 053100 - STEEL DECKING

PART 1 - GENERAL

1.1 RELATED DOCUMENTS

A. Drawings and general provisions of the Contract, including General and Supplementary Conditions and Division 01 Specification Sections, apply to this Section.

1.2 SUMMARY

A. Section Includes:

1. Roof deck.

B. Related Requirements:

1. Section 033000 "Cast-in-Place Concrete" for normal-weight and lightweight structural concrete fill over steel deck.
2. Section 051200 "Structural Steel Framing" for shop- and field-welded shear connectors.
3. Section 055000 "Metal Fabrications" for framing deck openings with miscellaneous steel shapes.
4. Section 099113 "Exterior Painting" for repair painting of primed deck and finish painting of deck.
5. Section 099123 "Interior Painting" for repair painting of primed deck and finish painting of deck.
6. Section 053000 “ Cellular Roof Deck”

1.3 ACTION SUBMITTALS

A. Product Data: For each type of deck, accessory, and product indicated.

B. Shop Drawings:

1. Include layout and types of deck panels, anchorage details, reinforcing channels, pans, cut deck openings, special jointing, accessories, and attachments to other construction.

1.4 INFORMATIONAL SUBMITTALS

A. Welding certificates.

B. Product Certificates: For each type of steel deck.

C. Product Test Reports: For tests performed by a qualified testing agency, indicating that each of the following complies with requirements:

1. Power-actuated mechanical fasteners.

1.5 QUALITY ASSURANCE

A. Testing Agency Qualifications: Qualified according to ASTM E329 for testing indicated.

B. Welding Qualifications: Qualify procedures and personnel according to AWS D1.3/D1.3M, "Structural Welding Code - Sheet Steel."

C. Electrical Raceway Units: Provide UL-labeled cellular floor-deck units complying with UL 209 and listed in UL's "Electrical Construction Equipment Directory" for use with standard header ducts and outlets for electrical distribution systems.

1.6 DELIVERY, STORAGE, AND HANDLING

A. Protect steel deck from corrosion, deformation, and other damage during delivery, storage, and handling.

B. Stack steel deck on platforms or pallets and slope to provide drainage. Protect with a waterproof covering and ventilate to avoid condensation.

1. Protect and ventilate acoustical cellular roof deck with factory-installed insulation to maintain insulation free of moisture.

PART 2 - PRODUCTS

2.1 PERFORMANCE REQUIREMENTS

A. AISI Specifications: Comply with calculated structural characteristics of steel deck according to AISI's "North American Specification for the Design of Cold-Formed Steel Structural Members."

B. Fire-Resistance Ratings: Comply with ASTM E119; testing by a qualified testing agency. Identify products with appropriate markings of applicable testing agency.

1. Indicate design designations from UL's "Fire Resistance Directory" or from the listings of another qualified testing agency.

2.2 ROOF DECK

A. Roof Deck: Fabricate panels, without top-flange stiffening grooves, to comply with "SDI Specifications and Commentary for Steel Roof Deck," in SDI Publication No. 31, and with the following:

1. Galvanized-Steel Sheet: ASTM A653/A653M, Structural Steel (SS), Grade 33 (230), G60 (Z180)] zinc coating.
2. Galvanized and Shop-Primed Steel Sheet: ASTM A653/A653M, Structural Steel (SS), Grade 33 (230), G60 (Z180) zinc coating; cleaned, pretreated, and primed with manufacturer's standard baked-on, rust-inhibitive primer.

    a. Color: Manufacturer's standard Gray

3. Aluminum-Zinc-Alloy-Coated Steel Sheet: ASTM A792/A792M, Structural Steel (SS), Grade 33 (230) minimum, AZ50 (AZ150) aluminum-zinc-alloy coating.
4. Deck Profile: As indicated Retain one option in "Profile Depth" Subparagraph below or revise to suit Project. Indicate locations on Drawings if various depths are required..
5. Profile Depth: As indicated
6. Design Uncoated-Steel Thickness: As indicated
7. Design Uncoated-Steel Thicknesses; Deck Unit/Bottom Plate: As indicated
8. Span Condition: As indicated
9. Side Laps: Overlapped.

2.3 ACCESSORIES

A. General: Provide manufacturer's standard accessory materials for deck that comply with requirements indicated.

B. Mechanical Fasteners: Corrosion-resistant, low-velocity, power-actuated or pneumatically driven carbon-steel fasteners; or self-drilling, self-threading screws.

C. Side-Lap Fasteners: Corrosion-resistant, hexagonal washer head; self-drilling, carbon-steel screws, No. 10 (4.8-mm) minimum diameter.

D. Flexible Closure Strips: Vulcanized, closed-cell, synthetic rubber.

E. Miscellaneous Sheet Metal Deck Accessories: Steel sheet, minimum yield strength of 33,000 psi (230 MPa), not less than 0.0359-inch (0.91-mm) design uncoated thickness, of same material and finish as deck; of profile indicated or required for application.

F. Pour Stops and Girder Fillers: Steel sheet, minimum yield strength of 33,000 psi (230 MPa), of same material and finish as deck, and of thickness and profile [indicated] [recommended by SDI Publication No. 31 for overhang and slab depth].

G. Column Closures, End Closures, Z-Closures, and Cover Plates: Steel sheet, of same material, finish, and thickness as deck unless otherwise indicated.

H. Piercing Hanger Tabs: Piercing steel sheet hanger attachment devices for use with floor deck.

I. Flat Sump Plates: Single-piece steel sheet, 0.0747 inch (1.90 mm) thick, of same material and finish as deck. For drains, cut holes in the field.

J. Recessed Sump Pans: Single-piece steel sheet, 0.0747 inch (1.90 mm) thick, of same material and finish as deck, with 3-inch- (76-mm-) wide flanges and level recessed pans of 1-1/2-inch (38-mm) minimum depth. For drains, cut holes in the field.

K. Galvanizing Repair Paint: ASTM A780/A780M.

L. Repair Paint: Manufacturer's standard rust-inhibitive primer of same color as primer.

PART 3 - EXECUTION

3.1 EXAMINATION

A. Examine supporting frame and field conditions for compliance with requirements for installation tolerances and other conditions affecting performance of the Work.

B. Proceed with installation only after unsatisfactory conditions have been corrected.

3.2 INSTALLATION, GENERAL

A. Install deck panels and accessories according to applicable specifications and commentary in SDI Publication No. 31, manufacturer's written instructions, and requirements in this Section.

B. Install temporary shoring before placing deck panels if required to meet deflection limitations.

C. Locate deck bundles to prevent overloading of supporting members.

D. Place deck panels on supporting frame and adjust to final position with ends accurately aligned and bearing on supporting frame before being permanently fastened. Do not stretch or contract side-lap interlocks.

1. Align cellular deck panels over full length of cell runs and align cells at ends of abutting panels.

E. Place deck panels flat and square and fasten to supporting frame without warp or deflection.

F. Cut and neatly fit deck panels and accessories around openings and other work projecting through or adjacent to deck.

G. Provide additional reinforcement and closure pieces at openings as required for strength, continuity of deck, and support of other work.

H. Comply with AWS requirements and procedures for manual shielded metal arc welding, appearance and quality of welds, and methods used for correcting welding work.

I. Mechanical fasteners may be used in lieu of welding to fasten deck with Architect's approval. Locate mechanical fasteners and install according to deck manufacturer's written instructions.

3.3 ROOF-DECK INSTALLATION

A. Fasten roof-deck panels to steel supporting members by arc spot (puddle) welds of the surface diameter indicated or arc seam welds with an equal perimeter that is not less than 1-1/2 inches (38 mm) long, and as follows:

1. Weld Diameter: As indicated.
2. Weld Spacing: Weld edge and interior ribs of deck units with a minimum of two welds per deck unit at each support. Space welds as indicated.

B. Side-Lap and Perimeter Edge Fastening: Fasten side laps and perimeter edges of panels between supports, at intervals not exceeding the lesser of one-half of the span or 36 inches (914 mm), and as follows:

1. Mechanically fasten with self-drilling, No. 10 (4.8-mm-) diameter or larger, carbon-steel screws.
2. Fasten with a minimum of 1-1/2-inch- (38-mm-) long welds.

C. End Bearing: Install deck ends over supporting frame with a minimum end bearing of 1-1/2 inches (38 mm), with end joints as follows:

1. End Joints: Lapped 2 inches (51 mm) minimum or butted at Contractor's option.

D. Roof Sump Pans and Sump Plates: Install over openings provided in roof deck and weld flanges to top of deck. Space welds not more than 12 inches (305 mm) apart with at least one weld at each corner.

1. Install reinforcing channels or zees in ribs to span between supports and weld.

E. Miscellaneous Roof-Deck Accessories: Install ridge and valley plates, finish strips, end closures, and reinforcing channels according to deck manufacturer's written instructions. Weld or mechanically fasten to substrate to provide a complete deck installation.

1. Weld cover plates at changes in direction of roof-deck panels unless otherwise indicated.

F. Flexible Closure Strips: Install flexible closure strips over partitions, walls, and where indicated. Install with adhesive according to manufacturer's written instructions to ensure complete closure.

3.4 FIELD QUALITY CONTROL

A. Testing Agency: Owner will engage a qualified testing agency to perform tests and inspections.

B. Field welds will be subject to inspection.

C. Prepare test and inspection reports.

D. Remove and replace work that does not comply with specified requirements.

E. Additional inspecting, at Contractor's expense, will be performed to determine compliance of corrected work with specified requirements.

3.5 PROTECTION

A. Galvanizing Repairs: Prepare and repair damaged galvanized coatings on both surfaces of deck with galvanized repair paint according to ASTM A780/A780M and manufacturer's written instructions.

B. Repair Painting: Wire brush and clean rust spots, welds, and abraded areas on **both surfaces** of prime-painted deck immediately after installation, and apply repair paint.

1. Apply repair paint, of same color as adjacent shop-primed deck, to bottom surfaces of deck exposed to view.
2. Wire brushing, cleaning, and repair painting of bottom deck surfaces are included in Section 099113 "Exterior Painting" and Section 099123 "Interior Painting."

C. Repair Painting: Wire brushing, cleaning, and repair painting of rust spots, welds, and abraded areas of both deck surfaces are included in Section 099113 "Exterior Painting" and Section 099123 "Interior Painting."

D. Provide final protection and maintain conditions to ensure that steel deck is without damage or deterioration at time of Substantial Completion.

END OF SECTION 053100

SECTION 054000 - COLD-FORMED METAL FRAMING

PART 1 - GENERAL

1.1 RELATED DOCUMENTS

A. Drawings and general provisions of the Contract, including General and Supplementary Conditions and Division 01 Specification Sections, apply to this Section.

1.2 SUMMARY

A. Section Includes:

1. Exterior non-load-bearing wall framing.
2. Soffit framing.

B. Related Requirements:

1. Section 055000 "Metal Fabrications" for miscellaneous steel shapes, masonry shelf angles, and connections used with cold-formed metal framing.
2. Section 092216 "Non-Structural Metal Framing" for standard, interior non-load-bearing, metal-stud framing, with height limitations and ceiling-suspension assemblies.

1.3 PREINSTALLATION MEETINGS

A. Preinstallation Conference: Conduct conference at Project site

1.4 ACTION SUBMITTALS

A. Product Data: For each type of product.

B. Shop Drawings:

1. Include layout, spacings, sizes, thicknesses, and types of cold-formed steel framing; fabrication; and fastening and anchorage details, including mechanical fasteners.
2. Indicate reinforcing channels, opening framing, supplemental framing, strapping, bracing, bridging, splices, accessories, connection details, and attachment to adjoining work.

C. Delegated-Design Submittal: For cold-formed steel framing.

1.5 INFORMATIONAL SUBMITTALS

A. Qualification Data: For testing agency.

B. Welding certificates.

C. Product Certificates: For each type of code-compliance certification for studs and tracks.

D. Product Test Reports: For each listed product, for tests performed by **manufacturer and witnessed by a qualified testing agency a qualified testing agency**.

1. Steel sheet.
2. Expansion anchors.
3. Power-actuated anchors.
4. Mechanical fasteners.
5. Vertical deflection clips.
6. Horizontal drift deflection clips
7. Miscellaneous structural clips and accessories.

1.6 QUALITY ASSURANCE

A. Testing Agency Qualifications: Qualified according to ASTM E329 for testing indicated.

B. Product Tests: Mill certificates or data from a qualified independent testing agency**, or in-house testing with calibrated test equipment,** indicating steel sheet complies with requirements, including base-metal thickness, yield strength, tensile strength, total elongation, chemical requirements, and metallic-coating thickness.

C. Welding Qualifications: Qualify procedures and personnel according to the following:

1. AWS D1.1/D1.1M, "Structural Welding Code - Steel."
2. AWS D1.3/D1.3M, "Structural Welding Code - Sheet Steel."

D. Comply with AISI S230 "Standard for Cold-Formed Steel Framing - Prescriptive Method for One and Two Family Dwellings."

PART 2 - PRODUCTS

2.1 MANUFACTURERS

A. Manufacturers: Subject to compliance with requirements, provide products by one of the following:

1. ClarkDietrich Building Systems
2. Marino\WARE
3. Nuconsteel, A Nucor Company
4. Steel Network, Inc. (The)

5. Steel Structural Systems
6. United Steel Deck, Inc.

2.2 PERFORMANCE REQUIREMENTS

A. Delegated Design: Engage a qualified professional engineer, as defined in Section 014000 "Quality Requirements," to design cold-formed steel framing.

B. Structural Performance: Provide cold-formed steel framing capable of withstanding design loads within limits and under conditions indicated.

1. Design Loads: A**s indicated on Drawings or as calculated per code.**
2. Deflection Limits: Design framing systems to withstand **design loads** without deflections greater than the following:
   a. Exterior Non-Load-Bearing Framing: Horizontal deflection of **1/360 typical of the wall height and 1/600** of the wall height where supporting adhered veneer.
   b. Interior Non-Load-Bearing Framing: Horizontal deflection of **1/240** of the wall height under a horizontal load of 5 lbf/sq. ft. (239 Pa).
   ~~c.~~ Floor Joist Framing: Vertical deflection of **1/360** for live loads and l/240 for total loads of the span.

3. Design framing systems to provide for movement of framing members located outside the insulated building envelope without damage or overstressing, sheathing failure, connection failure, undue strain on fasteners and anchors, or other detrimental effects when subject to a maximum ambient temperature change of 120 deg F (67 deg C).
4. Design framing system to maintain clearances at openings, to allow for construction tolerances, and to accommodate live load deflection of primary building structure as follows:

   a. Upward and downward movement of **1 inch (25 mm) unless noted otherwise on structural drawings**.

5. Design exterior non-load-bearing wall framing to accommodate horizontal deflection without regard for contribution of sheathing materials.

C. Cold-Formed Steel Framing Standards: Unless more stringent requirements are indicated, framing shall comply with AISI S100, AISI S200, and the following:

1. Floor and Roof Systems: AISI S210.
2. Wall Studs: AISI S211.
3. Headers: AISI S212.

D. Fire-Resistance Ratings: Comply with ASTM E119; testing by a qualified testing agency. Identify products with appropriate markings of applicable testing agency.

1. Indicate design designations from UL's "Fire Resistance Directory" or from the listings of another qualified testing agency acceptable to authorities having jurisdiction.

2.3 COLD-FORMED STEEL FRAMING MATERIALS

A. Steel Sheet: ASTM A1003/A1003M, Structural Grade, Type H, metallic coated, of grade and coating designation as follows:

1. Grade: **As required by structural performance**.
2. Coating: **G60 (Z180).**.

B. Steel Sheet for **Vertical Deflection** and Drift Clips: ASTM A653/A653M, structural steel, zinc coated, of grade and coating as follows:

1. Grade: **As required by structural performance**.
2. Coating: **G90 (Z275)**.

2.4 EXTERIOR NON-LOAD-BEARING WALL FRAMING

A. Steel Studs: Manufacturer's standard C-shaped steel studs, of web depths indicated, punched, with stiffened flanges, and as follows:

1. Minimum Base-Metal Thickness: **0.0538 inch (1.37 mm).**
2. Flange Width: **1-3/8 inches (35 mm) minimum**.

B. Steel Track: Manufacturer's standard U-shaped steel track, of web depths indicated, unpunched, with unstiffened flanges, and as follows:

1. Minimum Base-Metal Thickness: **0.0538 inch (1.37 mm)**.
2. Flange Width: **1-1/4 inches (32 mm**.

C. Vertical Deflection Clips: Manufacturer's standard [**bypass**] [**head**] clips, capable of accommodating upward and downward vertical displacement of primary structure through positive mechanical attachment to stud web.

D. Single Deflection Track: Manufacturer's single, deep-leg, U-shaped steel track; unpunched, with unstiffened flanges, of web depth to contain studs while allowing free vertical movement, with flanges designed to support horizontal loads and transfer them to the primary structure, and as follows:

1. Minimum Base-Metal Thickness: **0.0538 inch (1.37 mm**.
2. Flange Width: Minimum of 2½” inch or **1 inch (25 mm) plus the design deflection given on the drawings.**

E. Double Deflection Tracks: Manufacturer's double, deep-leg, U-shaped steel tracks, consisting of nested inner and outer tracks; unpunched, with unstiffened flanges.

1. Outer Track: Of web depth to allow free vertical movement of inner track, with flanges designed to support horizontal loads and transfer them to the primary structure, and as follows:

a. Minimum Base-Metal Thickness **0.0538 inch (1.37 mm)**.
b. Flange Width: Minimum of 2½" inch or **1 inch (25 mm) plus the design deflection given on the drawings**.

2. Inner Track: Of web depth indicated, and as follows:

a. Minimum Base-Metal Thickness: **0.0538 inch (1.37 mm)**.
b. Flange Width: dimension **equal to sum of outer deflection track flange width plus 1 inch**, minimum.

F. Drift Clips: Manufacturer's standard bypass or head clips, capable of isolating wall stud from upward and downward vertical displacement and lateral drift of primary structure through positive mechanical attachment to stud web and structure.

G. Vertical Deflection Clips: Manufacturer's standard **bypass** clips, capable of accommodating upward and downward vertical displacement of primary structure through positive mechanical attachment to stud web.

2.5 SOFFIT FRAMING

A. Exterior Soffit Frame: Manufacturer's standard C-shaped steel sections, of web depths indicated, with stiffened flanges, and as follows:

1. Minimum Base-Metal Thickness: **0.0428 inch (1.09 mm)**.
2. Flange Width: **1-5/8 inches (41 mm)**, minimum.

2.6 FRAMING ACCESSORIES

A. Fabricate steel-framing accessories from ASTM A1003/A1003M, Structural Grade, Type H, metallic coated steel sheet, of same grade and coating designation used for framing members.

B. Provide accessories of manufacturer's standard thickness and configuration, unless otherwise indicated, as follows:

1. Supplementary framing.
2. Bracing, bridging, and solid blocking.
3. Web stiffeners.
4. Anchor clips.
5. End clips.
6. Gusset plates.
7. Stud kickers and knee braces.
8. Hole-reinforcing plates.
9. Backer plates.

2.7 ANCHORS, CLIPS, AND FASTENERS

A. Steel Shapes and Clips: ASTM A36/A36M, zinc coated by hot-dip process according to ASTM A123/A123M.

B. Post-Installed Anchors: Fastener systems with bolts of same basic metal as fastened metal, if visible, unless otherwise indicated; with working capacity greater than or equal to the design load, according to an evaluation report acceptable to authorities having jurisdiction, and as appropriate for the substrate.

1. Uses: Securing cold-formed steel framing to structure.
2. Type: **Torque-controlled expansion anchor or adhesive anchor**.
3. Material for Interior Locations: Carbon-steel components zinc plated to comply with ASTM B633 or ASTM F1941 (ASTM F1941M), Class Fe/Zn 5, unless otherwise indicated.

C. Power-Actuated Anchors: Fastener systems with working capacity greater than or equal to the design load, according to an evaluation report acceptable to authorities having jurisdiction, based on ICC-ES AC70.

D. Mechanical Fasteners: ASTM C1513, corrosion-resistant-coated, self-drilling, self-tapping, steel drill screws.

1. Head Type: Low-profile head beneath sheathing; manufacturer's standard elsewhere.

E. Welding Electrodes: Comply with AWS standards.

2.8 MISCELLANEOUS MATERIALS

A. Galvanizing Repair Paint: **SSPC-Paint 20**.

B. Cement Grout: Portland cement, ASTM C150/C150M, Type I; and clean, natural sand, ASTM C404. Mix at ratio of 1 part cement to 2-1/2 parts sand, by volume, with minimum water required for placement and hydration.

C. Nonmetallic, Nonshrink Grout: Factory-packaged, nonmetallic, noncorrosive, nonstaining grout, complying with ASTM C1107/C1107M, and with a fluid consistency and 30-minute working time.

D. Shims: Load-bearing, high-density, multimonomer, nonleaching plastic; or cold-formed steel of same grade and metallic coating as framing members supported by shims.

E. Sealer Gaskets: Closed-cell neoprene foam, 1/4 inch (6 mm) thick, selected from manufacturer's standard widths to match width of bottom track or rim track members as required.

2.9 FABRICATION

A. Fabricate cold-formed steel framing and accessories plumb, square, and true to line, and with connections securely fastened, according to referenced AISI's specifications and standards, manufacturer's written instructions, and requirements in this Section.

1. Fabricate framing assemblies using jigs or templates.
2. Cut framing members by sawing or shearing; do not torch cut.
3. Fasten cold-formed steel framing members by welding, screw fastening, clinch fastening, pneumatic pin fastening, or riveting as standard with fabricator. Wire tying of framing members is not permitted.

    a. Comply with AWS D1.3/D1.3M requirements and procedures for welding, appearance and quality of welds, and methods used in correcting welding work.
    b. Locate mechanical fasteners and install according to Shop Drawings, with screws penetrating joined members by no fewer than three exposed screw threads.

4. Fasten other materials to cold-formed steel framing by welding, bolting, pneumatic pin fastening, or screw fastening, according to Shop Drawings.

B. Reinforce, stiffen, and brace framing assemblies to withstand handling, delivery, and erection stresses. Lift fabricated assemblies by means that prevent damage or permanent distortion.

C. Tolerances: Fabricate assemblies level, plumb, and true to line to a maximum allowable variation of 1/8 inch in 10 feet (1:960) and as follows:

1. Spacing: Space individual framing members no more than plus or minus 1/8 inch (3 mm) from plan location. Cumulative error shall not exceed minimum fastening requirements of sheathing or other finishing materials.
2. Squareness: Fabricate each cold-formed steel framing assembly to a maximum out-of-square tolerance of 1/8 inch (3 mm).

PART 3 - EXECUTION

3.1 EXAMINATION

A. Examine substrates, areas, conditions, and abutting structural framing for compliance with requirements for installation tolerances and other conditions affecting performance of the Work.

B. Proceed with installation only after unsatisfactory conditions have been corrected.

3.2 PREPARATION

A. Install sealer gaskets at the underside of wall bottom track or rim track and at the top of foundation wall or slab at stud or joist locations.

3.3 INSTALLATION, GENERAL

A. Cold-formed steel framing may be shop or field fabricated for installation, or it may be field assembled.

B. Install cold-formed steel framing according to AISI S200, AISI S202, and manufacturer's written instructions unless more stringent requirements are indicated.

C. Install shop- or field-fabricated, cold-formed framing and securely anchor to supporting structure.

   1. Screw, bolt, or weld wall panels at horizontal and vertical junctures to produce flush, even, true-to-line joints with maximum variation in plane and true position between fabricated panels not exceeding 1/16 inch (1.6 mm).

D. Install cold-formed steel framing and accessories plumb, square, and true to line, and with connections securely fastened.

   1. Cut framing members by sawing or shearing; do not torch cut.
   2. Fasten cold-formed steel framing members by welding, screw fastening, clinch fastening, or riveting. Wire tying of framing members is not permitted.

      a. Comply with AWS D1.3/D1.3M requirements and procedures for welding, appearance and quality of welds, and methods used in correcting welding work.
      b. Locate mechanical fasteners, install according to Shop Drawings, and comply with requirements for spacing, edge distances, and screw penetration.

E. Install framing members in one-piece lengths unless splice connections are indicated for track or tension members.

F. Install temporary bracing and supports to secure framing and support loads equal to those for which structure was designed. Maintain braces and supports in place, undisturbed, until entire integrated supporting structure has been completed and permanent connections to framing are secured.

G. Do not bridge building expansion joints with cold-formed steel framing. Independently frame both sides of joints.

H. Install insulation, specified in Section 072100 "Thermal Insulation," in framing-assembly members, such as headers, sills, boxed joists, and multiple studs at openings, that are inaccessible on completion of framing work.

I. Fasten hole-reinforcing plate over web penetrations that exceed size of manufacturer's approved or standard punched openings.

3.4 EXTERIOR NON-LOAD-BEARING WALL INSTALLATION

A. Install continuous tracks sized to match studs. Align tracks accurately and securely anchor to supporting structure.

B. Fasten both flanges of studs to **top and** bottom track unless otherwise indicated or at a defelection track that should not be fasted to top track. Space studs as follows:

   1. Stud Spacing: [**16 inches (406 mm)**] maximum.

C. Set studs plumb, except as needed for diagonal bracing or required for nonplumb walls or warped surfaces and similar requirements.

D. Isolate non-load-bearing steel framing from building structure to prevent transfer of vertical loads while providing lateral support.

   1. Install single deep-leg deflection tracks and anchor to building structure.
   2. Install double deep-leg deflection tracks and anchor outer track to building structure.
   3. Connect vertical deflection clips to **bypassing** studs and anchor to building structure.
   4. Connect drift clips to cold-formed steel framing and anchor to building structure.

E. Install horizontal bridging in wall studs, spaced vertically in rows indicated **on Shop Drawings** but not more than 48 inches (1220 mm) apart. Fasten at each stud intersection.

   1. Channel Bridging: Cold-rolled steel channel, welded or mechanically fastened to webs of punched studs.
   2. Strap Bridging: Combination of flat, taut, steel sheet straps of width and thickness indicated and stud-track solid blocking of width and thickness to match studs. Fasten flat straps to stud flanges and secure solid blocking to stud webs or flanges.
   3. Bar Bridging: Proprietary bridging bars installed according to manufacturer's written instructions.

F. Top Bridging for Single Deflection Track: Install row of horizontal bridging within **12 inches (305 mm)** of single deflection track. Install a combination of bridging and stud or stud-track solid blocking of width and thickness matching studs, secured to stud webs or flanges.

   1. Install solid blocking at **96-inch (2440-mm) centers**.

G. Install miscellaneous framing and connections, including stud kickers, web stiffeners, clip angles, continuous angles, anchors, and fasteners, to provide a complete and stable wall-framing system.

3.5 FIELD QUALITY CONTROL

A. Testing: Owner will engage a qualified independent testing and inspecting agency to perform field tests and inspections and prepare test reports.

B. Field and shop welds will be subject to testing and inspecting.

C. Testing agency will report test results promptly and in writing to Contractor and Architect.

D. Cold-formed steel framing will be considered defective if it does not pass tests and inspections.

E. Additional testing and inspecting, at Contractor's expense, will be performed to determine compliance of replaced or additional work with specified requirements.

3.6 REPAIRS AND PROTECTION

A. Galvanizing Repairs: Prepare and repair damaged galvanized coatings on fabricated and installed cold-formed steel framing with galvanized repair paint according to ASTM A780/A780M and manufacturer's written instructions.

B. Provide final protection and maintain conditions, in a manner acceptable to manufacturer and Installer, that ensure that cold-formed steel framing is without damage or deterioration at time of Substantial Completion.

END OF SECTION 054000

SECTION 055000 - METAL FABRICATIONS

PART 1 - GENERAL

1.1 RELATED DOCUMENTS

A. Drawings and general provisions of the Contract, including General and Supplementary Conditions and Division 1 Specification Sections, apply to this Section.

1.2 SUMMARY

A. This Section includes, but is not limited to the following items. Contractor shall thoroughly review and use both the Architectural and Structural drawings for details requiring miscellaneous metal fabrications that may be detailed throughout.

1. Loose bearing plates.
2. Loose steel lintels.
3. Steel framing and supports for operable partitions.
4. Steel angle framing for support of mechanical rooftop equipment.
5. Steel angle framing for support of roof openings at mechanical penetrations and roof hatches.
6. Miscellaneous steel angles and clip angles for support of lite-gauge metal framing.
7. Steel framing and supports for applications where framing and supports are not specified in other Sections.
8. Steel and other metal shapes, plates and bars for applications not specifically noted herein.
9. Metal fabrications detailed in the drawings and not specifically noted herein.
10. Elevator hoist beams.
11. Shelf angles.
12. Metal ladders.
13. Elevator pit sump covers.
14. Metal bollards.
15. Fasteners.
16. Miscellaneous materials.

B. Products furnished, but not installed under this Section include the following:

1. Loose steel lintels.
2. Anchor bolts, steel pipe sleeves, slotted-channel inserts, and wedge-type inserts indicated to be cast into concrete or built into unit masonry.
3. Steel weld plates and angles for casting into concrete for applications where they are not specified in other Sections.

C. Related Sections include the following:

1. Division 3 Section "Cast-in-Place Concrete" for installing anchor bolts, steel pipe sleeves, slotted-channel inserts, wedge-type inserts, and other items cast into concrete.
2. Division 4 Section "Unit Masonry (Assemblies)" for installing loose lintels, anchor bolts, and other items built into unit masonry.
3. Division 5 Section "Structural Steel Framing."
4. Division 9 Section “Painting” for primers and paint products.
5. Division 9 Section “High Performance Coatings” for primers.

1.3 COORDINATION

A. Coordinate selection of shop primers with topcoats to be applied over them. Comply with paint and coating manufacturers' written recommendations to ensure that shop primers and topcoats are compatible with one another.

B. Coordinate installation of metal fabrications that are anchored to or that receive other work. Furnish setting drawings, templates, and directions for installing anchorages, including sleeves, concrete inserts, anchor bolts, and items with integral anchors, that are to be embedded in concrete or masonry. Deliver such items to Project site in time for installation.

1.4 SUBMITTALS

A. Product Data: For the following:

1. Paint products. Also provide a copy to painter who will be applying paint topcoat.
2. Non-slip aggregates and non-slip aggregate surface finishes.
3. Grout.

B. Shop Drawings: Show fabrication and installation details. Include plans, elevations, sections, and details of metal fabrications and their connections. Show anchorage and accessory items.

1. Provide setting diagrams or templates for anchors and bolts which are to be embedded in concrete or masonry.

C. Delegated-Design Submittal: For ladders, including analysis data signed and sealed by the qualified professional engineer responsible for their preparation.

D. Qualification Data: For professional engineer.

E. Mill Certificates: Signed by stainless-steel manufacturers, certifying that products furnished comply with requirements.

F. Welding certificates: Copies of certificates for field welding personnel must be available at Project site for review by Architect.

G. Paint Compatibility Certificates: From manufacturers of topcoats applied over shop primers, certifying that shop primers are compatible with topcoats.

H. Research/Evaluation Reports: For post-installed anchors, from ICC-ES.

1.5 QUALITY ASSURANCE

A. Fabricator Qualifications: A firm experienced in producing metal fabrications similar to those indicated for Project and with a record of successful in-service performance, as well as sufficient production capacity to produce required units.

B. Welding Qualifications: Qualify procedures and personnel according to the following. Certify that welder has satisfactorily passed AWS qualification tests for welding processes involved.

1. AWS D1.1, "Structural Welding Code - Steel."
2. AWS D1.2, "Structural Welding Code - Aluminum."
3. AWS D1.6, "Structural Welding Code - Stainless Steel."

1.6 FIELD CONDITIONS

A. Field Measurements: Verify actual locations of walls and other construction contiguous with metal fabrications by field measurements before fabrication and indicate measurements on Shop Drawings.

1. Established Dimensions: Where field measurements cannot be made without delaying the Work, establish dimensions and proceed with fabricating metal fabrications without field measurements. Coordinate wall and other contiguous construction to ensure that actual dimensions correspond to established dimensions.
2. Provide allowance for trimming and fitting at site.

1.7 DELIVERY AND COORDINATION

A. Coordinate installation of anchorages for metal fabrications. Furnish setting drawings, templates, and directions for installing anchorages, including sleeves, concrete inserts, anchor bolts, and items with integral anchors, that are to be embedded in concrete or masonry. Deliver such items to Project site in time for installation.

B. Deliver fabrications to the Project site and store to avoid damage.

C. Identify pieces with suitable mark for easy location.

D. Deliver products in their original wrappings or carton clearly marked for identification and bearing manufacturer’s name, and model or part number, if applicable. Store to avoid damage.

PART 2 - PRODUCTS

2.1 PERFORMANCE REQUIREMENTS

A. Delegated Design: Engage a qualified professional engineer, as defined in Division 1 Section "Quality Requirements," to design ladders and custom banner posts.

B. Structural Performance of Ladders: Ladders shall withstand the effects of loads and stresses within limits and under conditions specified in ANSI A14.3.

C. Thermal Movements: Allow for thermal movements from ambient and surface temperature changes acting on exterior metal fabrications by preventing buckling, opening of joints, overstressing of components, failure of connections, and other detrimental effects.

1. Temperature Change: 120 deg F, ambient; 180 deg F, material surfaces.

2.2 METALS

A. Metal Surfaces, General: Provide materials with smooth, flat surfaces unless otherwise indicated. For metal fabrications exposed to view in the completed Work, provide materials without seam marks, roller marks, rolled trade names, or blemishes.

B. Steel Plates, Shapes, and Bars: ASTM A36, except all wide flange shapes shall conform to ASTM A992/A572, Grade 50.

C. Steel Plates to be Bent or Cold Formed: ASTM A203.

D. Cold-finished Steel Bars: ASTM A108.

E. Checkered Plate: ASTM A786, rolled from plate complying with ASTM A500, or hot-rolled ASTM A283, Grade C or D.

F. Steel Tubing: Cold-form steel tubing complying with ASTM A500, or hot-rolled ASTM A501.

G. Steel Pipe: ASTM A53, standard weight (Schedule 40), unless another weight is indicated or required by structural loads; welded or seamless; uncoated or hot-dipped galvanized as indicated on Contract Drawings.

H. Stainless-Steel Sheet, Strip, and Plate: ASTM A240 or ASTM A666, Type304.

I. Stainless-Steel Bars and Shapes: ASTM A276, Type304.

J. Cast Iron: Either gray iron, ASTM A48, or malleable iron, ASTM A47, unless otherwise indicated.

K. Aluminum Plate and Sheet: ASTM B209, Alloy 6061-T6.

L. Aluminum Extrusions: ASTM B221, Alloy 6063-T6.

M. Aluminum Castings: ASTM B26, Alloy 443.0-F.

2.3 PAINT

A. Shop Primer for Ferrous Metal: Fast-curing, lead- and chromate-free, universal modified-alkyd primer complying with performance requirements in FS TT-P-664; selected for good resistance

to normal atmospheric corrosion, compatibility with finish paint systems indicated, and capability to provide a sound foundation for field-applied topcoats despite prolonged exposure.

B. Water-Based Primer: Emulsion type, anticorrosive primer for mildly corrosive environments that is resistant to flash rusting when applied to cleaned steel, complying with MPI#107 and compatible with topcoat.

C. Bituminous Paint: Cold-applied asphalt mastic complying with SSPC-Paint12, except containing no asbestos fibers, or cold-applied asphalt emulsion complying with ASTM D1187.

D. Epoxy Zinc-Rich Primer: Complying with MPI#20 and compatible with topcoat.

E. Shop Primer for Galvanized Metal: Factory-formulated galvanized metal primer for exterior application.

1. ICI Dulux Paints; 4160-XXXX Devguard Multi-purpose Tank and Structural Primer.
2. Kelly-Moore: 1722 Kel-Guard Acrylic Galvanized Iron Primer.
3. MAB Paints: Rust-O-Lastic Hydro-Prime II Acrylic (DTM) Maintenance Primer 073-189.
4. Pittsburgh Paints: 90-709 Pitt-Tech One Pack Interior/Exterior Primer/Finish DTM Industrial Enamel.
5. Sherwin Williams: Galvite HS Paint B50WZ3.

F. Galvanizing Repair Paint: High-zinc-dust-content paint complying with SSPC-Paint 20 and compatible with paints specified to be used over it.

2.4 FASTENERS

A. General: Unless otherwise indicated, provide Type 304 stainless-steel fasteners for exterior use and zinc-plated fasteners with coating complying with ASTM B633 or ASTM F1941, Class Fe/Zn 5, at exterior walls. Select fasteners for type, grade, and class required.

1. Provide stainless-steel fasteners for fastening aluminum.
2. Provide stainless-steel fasteners for fastening stainless steel.

B. Steel Bolts and Nuts: Regular hexagon-head bolts, ASTM A307, Grade A; with hex nuts, ASTM A563; and, where indicated, flat washers.

C. Steel Bolts and Nuts: Regular hexagon-head bolts, ASTM A325, Type 3; with hex nuts, ASTM A563, Grade C3; and, where indicated, flat washers.

D. Stainless-Steel Bolts and Nuts: Regular hexagon-head annealed stainless-steel bolts, ASTM F593; with hex nuts, ASTM F594; and, where indicated, flat washers; Alloy Group 1.

E. Anchor Bolts: ASTM F1554, Grade 36, of dimensions indicated; with nuts, ASTM A563; and, where indicated, flat washers.

1. Hot-dip galvanize or provide mechanically deposited, zinc coating where item being fastened is indicated to be galvanized.

F. Machine Screws: ASME B18.6.3.

G. Lag Bolts: ASME B18.2.1.

H. Wood Screws: Flat head, carbon steel, ASME B18.6.1.

I. Plain Washers: Round, carbon steel, ASME B18.22.1.

J. Lock Washers: Helical, spring type, carbon steel, ASME B18.21.1.

K. Anchors, General: Anchors capable of sustaining, without failure, a load equal to six times the load imposed when installed in unit masonry and four times the load imposed when installed in concrete, as determined by testing according to ASTM E488, conducted by a qualified independent testing agency.

L. Cast-in-Place Anchors in Concrete: Either threaded type or wedge type unless otherwise indicated; galvanized ferrous castings, either ASTM A47 malleable iron or ASTM A27 cast steel. Provide bolts, washers, and shims as needed, all hot-dip galvanized per ASTM F2329.

M. Post-Installed Anchors: Torque-controlled expansion anchors or chemical anchors.

1. Material for Interior Locations: Carbon-steel components zinc plated to comply with ASTM B633 or ASTM F1941, Class Fe/Zn 5, unless otherwise indicated
2. Material for Exterior Locations and Where Stainless Steel Is Indicated: Alloy Group 1 stainless-steel bolts, ASTM F593, and nuts, ASTM F594.

2.5 MISCELLANEOUS MATERIALS

A. Non-shrink, Nonmetallic Grout: Factory-packaged, non-staining, non-corrosive, non-gaseous grout complying with ASTM C1107. Provide grout specifically recommended by manufacturer for interior and exterior applications.

B. Concrete: Comply with requirements in Division 3 Section "Cast-in-Place Concrete" for normal-weight, air-entrained, concrete with a minimum 28-day compressive strength of 3000 psi.

2.6 FABRICATION, GENERAL

A. Shop Assembly: Preassemble items in the shop to greatest extent possible to minimize field splicing and assembly. Disassemble units only as necessary for shipping and handling limitations. Use connections that maintain structural value of joined pieces. Clearly mark units for reassembly and coordinated installation.

B. Cut, drill, and punch metals cleanly and accurately. Remove burrs and ease edges to a radius of approximately 1/32 inch unless otherwise indicated. Remove sharp or rough areas on exposed surfaces.

C. Form bent-metal corners to smallest radius possible without causing grain separation or otherwise impairing work.

D. Form exposed work with accurate angles and surfaces and straight edges.

E. Weld corners and seams continuously to comply with the following:

1. Use materials and methods that minimize distortion and develop strength and corrosion resistance of base metals.
2. Obtain fusion without undercut or overlap.
3. Remove welding flux immediately.
4. At exposed connections, finish exposed welds and surfaces smooth and blended so no roughness shows after finishing and contour of welded surface matches that of adjacent surface.

F. Form exposed connections with hairline joints, flush and smooth, using concealed fasteners or welds where possible. Where exposed fasteners are required, use Phillips flat-head (countersunk) fasteners unless otherwise indicated. Locate joints where least conspicuous.

G. Fabricate seams and other connections that are exposed to weather in a manner to exclude water. Provide weep holes where water may accumulate.

H. Cut, reinforce, drill, and tap metal fabrications as indicated to receive finish hardware, screws, and similar items.

I. Provide for anchorage of type indicated; coordinate with supporting structure. Space anchoring devices to secure metal fabrications rigidly in place and to support indicated loads.

J. Where units are indicated to be cast into concrete or built into masonry, equip with integrally welded steel strap anchors, 1/8 by 1-1/2 inches, with a minimum 6-inch embedment and 2-inch hook, not less than 8 inches from ends and corners of units and 24 inches o.c., unless otherwise indicated.

2.7 MISCELLANEOUS FRAMING AND SUPPORTS

A. General: Provide steel framing and supports not specified in other Sections as needed to complete the Work.

B. Fabricate units from steel shapes, plates, and bars of welded construction unless otherwise indicated. Fabricate to sizes, shapes, and profiles indicated and as necessary to receive adjacent construction retained by framing and supports. Cut, drill, and tap units to receive hardware, hangers, and similar items.

1. Furnish inserts for units installed after concrete is placed.

C. Fabricate supports for operable partitions from continuous steel beams of sizes indicated with attached bearing plates, anchors, and braces as indicated. Drill or punch bottom flanges of beams to receive partition track hanger rods; locate holes where indicated on operable partition Shop Drawings.

D. Galvanize miscellaneous framing and supports where indicated.

E. Prime miscellaneous framing and supports with primer specified in Division 9 Sections “Painting” and “High-Performance Coatings" where indicated.

2.8 MISCELLANEOUS STEEL TRIM

A. Unless otherwise indicated, fabricate units from structural-steel shapes, plates, and bars of profiles shown with continuously welded joints, and smooth exposed edges. Miter corners and use concealed field splices where possible.

B. Provide cutouts, fittings, and anchorages as needed to coordinate assembly and installation with other work. Provide anchors, welded to trim, when members will be embedded in concrete or masonry construction, spaced not more than 6 inches from each end, 6 inches from corners, and 24 inches o.c., unless otherwise indicated.

C. Galvanize and prime exterior miscellaneous steel trim.

D. Prime exterior miscellaneous steel trim with primer specified in Division 9 Section “Painting”.

2.9 METAL LADDERS

A. General:

1. Comply with ANSI A14.3, except for elevator pit ladders.
2. For elevator pit ladders, comply with ASME A17.1/CSA B44.

B. Steel Ladders: Engage a qualified professional engineer to design metal ladders, including connections to structure. Include effects of thermal movements.

1. Space siderails 18 inches apart unless otherwise indicated.
2. Siderails: Continuous, 3/8-by-3-inch steel flat bars, with eased edges.
3. Rungs: 1-inch diameter steel bars.
4. Fit rungs in centerline of siderails; plug-weld and grind smooth on outer rail faces.
5. Provide nonslip surfaces on top of each rung, either by coating rung with aluminum-oxide granules set in epoxy-resin adhesive or by using a type of manufactured rung filled with aluminum-oxide grout.
6. Support each ladder at top and bottom and not more than 60 inches o.c. with welded or bolted steel brackets.
7. Galvanize and prime exterior ladders, including brackets.

2.10 ELEVATOR PIT SUMP COVERS

A. Fabricate from welded or pressure-locked steel bar grating Limit openings in gratings to no more than 3/4 inch in least dimension.

B. Provide steel angle supports as indicated.

2.11 METAL BOLLARDS

A. Fabricate metal bollards from Schedule 40 steel pipe 1/4-inch wall-thickness round steel tubing. Galvanize exterior bollards.

1. Provide bollards as detailed on Drawings.
2. Bollards shall be concrete filled with mounted tops.

B. Prime bollards with primer specified in Division 9 Section "Painting”.

2.12 LOOSE BEARING AND LEVELING PLATES

A. Provide loose bearing and leveling plates for steel items bearing on masonry or concrete construction. Drill plates to receive anchor bolts and for grouting.

B. Galvanize plates.

C. Prime plates with primer specified in Division 9 Section "Painting".

2.13 LOOSE STEEL LINTELS

A. Fabricate loose steel lintels from steel angles and shapes of size indicated for openings and recesses in masonry walls and partitions at locations indicated. Fabricate in single lengths for each opening unless otherwise indicated. Weld adjoining members together to form a single unit where indicated.

B. Size loose lintels to provide bearing length at each side of openings equal to 1/12 of clear span, but not less than 8 inches unless otherwise indicated.

C. Galvanize and prime loose steel lintels located in exterior walls.

D. Prime loose steel lintels located in exterior walls with primer specified in Division 9 Section "Painting".

2.14 STEEL WELD PLATES AND ANGLES

A. Provide steel weld plates and angles not specified in other Sections, for items supported from concrete construction as needed to complete the Work. Provide each unit with no fewer than two integrally welded steel strap anchors for embedding in concrete.

2.15 FINISHES, GENERAL

A. Comply with NAAMM’s “Metal Finishes Manual for Architectural and Metal Products” for recommendations for applying and designating finishes.

B. Finish metal fabrications after assembly.

C. Finish exposed surfaces to remove tool and die

2.16 STEEL AND IRON FINISHES

A. Galvanizing: Hot-dip galvanize items as indicated to comply with applicable standards listed below:

1. ASTM A123 for galvanizing steel and iron products.
2. ASTM A153 for galvanizing steel and iron hardware.

3. Do not quench or apply post galvanizing treatments that might interfere with paint adhesion.

B. Preparation for Shop Priming Galvanized Items: After galvanizing, thoroughly clean railings of grease, dirt, oil, flux, and other foreign matter, and treat with metallic phosphate process.

C. Shop prime iron and steel items unless they are to be embedded in concrete, sprayed-on fireproofing, or masonry, or unless otherwise indicated.

1. Shop prime with primers specified in Division 9 Sections "Painting" and "High-Performance Coatings".

D. Preparation for Shop Priming: Prepare surfaces to comply with requirements indicated below:

1. Exterior Items: SSPC-SP 6/NACE No. 3, "Commercial Blast Cleaning."
2. Items Indicated to Receive Zinc-Rich Primer: SSPC-SP 6/NACE No. 3, "Commercial Blast Cleaning."
3. Items Indicated to Receive Primers Specified in Division 9 Section “High-Performance Coatings": SSPC-SP 6/NACE No. 3, "Commercial Blast Cleaning."
4. Other Items: SSPC-SP 3, "Power Tool Cleaning."

E. Shop Priming: Apply shop primer to comply with SSPC-PA 1, "Paint Application Specification No. 1: Shop, Field, and Maintenance Painting of Steel," for shop painting.

1. Stripe paint corners, crevices, bolts, welds, and sharp edges.

2.17 ALUMINUM FINISHES

A. As-Fabricated Finish: AA-M12.

B. Clear Anodic Finish: AAMA 611, Class I, AA-M12C22A41.

PART 3 - EXECUTION

3.1 INSTALLATION, GENERAL

A. Cutting, Fitting, and Placement: Perform cutting, drilling, and fitting required for installing metal fabrications. Set metal fabrications accurately in location, alignment, and elevation; with edges and surfaces level, plumb, true, and free of rack; and measured from established lines and levels.

B. Fit exposed connections accurately together to form hairline joints. Weld connections that are not to be left as exposed joints but cannot be shop welded because of shipping size limitations. Do not weld, cut, or abrade surfaces of exterior units that have been hot-dip galvanized after fabrication and are for bolted or screwed field connections.

C. Field Welding: Comply with the following requirements:

1. Use materials and methods that minimize distortion and develop strength and corrosion resistance of base metals.
2. Obtain fusion without undercut or overlap.
3. Remove welding flux immediately.
4. At exposed connections, finish exposed welds and surfaces smooth and blended so no roughness shows after finishing and contour of welded surface matches that of adjacent surface.

D. Fastening to In-Place Construction: Provide anchorage devices and fasteners where metal fabrications are required to be fastened to in-place construction. Provide threaded fasteners for use with concrete and masonry inserts, toggle bolts, through bolts, lag screws, wood screws, and other connectors.

E. Provide temporary bracing or anchors in formwork for items that are to be built into concrete, masonry, or similar construction.

F. Corrosion Protection: Coat concealed surfaces of aluminum that come into contact with grout, concrete, masonry, wood, or dissimilar metals with the following:

1. Cast Aluminum: Heavy coat of bituminous paint.
2. Extruded Aluminum: Two coats of clear lacquer.

3.2 INSTALLING MISCELLANEOUS FRAMING AND SUPPORTS

A. General: Install framing and supports to comply with requirements of items being supported, including manufacturers' written instructions and requirements indicated on Shop Drawings.

B. Anchor supports for operable partitions securely to, and rigidly brace from, building structure.

3.3 INSTALLING METAL BOLLARDS

A. Anchor bollards in place with concrete footings. Center and align bollards in holes 3 inches above bottom of excavation. Place concrete and vibrate or tamp for consolidation. Support and brace bollards in position until concrete has cured.

B. Anchor internal sleeves for removable bollards in concrete by inserting in pipe sleeves preset into concrete. Fill annular space around internal sleeves solidly with non-shrink grout; mixed and placed to comply with grout manufacturer's written instructions. Slope grout up approximately 1/8 inch toward internal sleeve.

C. Place removable bollards over internal sleeves and secure with 3/4-inch machine bolts and nuts. After tightening nuts, drill holes in bolts for inserting padlocks. Owner furnishes padlocks.

D. Fill bollards solidly with concrete, mounding top surface to shed water.

1. Do not fill removable bollards with concrete.

3.4 INSTALLING BEARING AND LEVELING PLATES

A. Clean concrete and masonry bearing surfaces of bond-reducing materials, and roughen to improve bond to surfaces. Clean bottom surface of plates.

B. Set bearing and leveling plates on wedges, shims, or leveling nuts. After bearing members have been positioned and plumbed, tighten anchor bolts. Do not remove wedges or shims but, if protruding, cut off flush with edge of bearing plate before packing with non-shrink grout. Pack grout solidly between bearing surfaces and plates to ensure that no voids remain.

3.5 ADJUSTING AND CLEANING

A. Touchup Painting: Immediately after erection, clean field welds, bolted connections, and abraded areas. Paint uncoated and abraded areas with the same material as used for shop painting to comply with SSPC-PA 1 for touching up shop-painted surfaces.

1. Apply by brush or spray to provide a minimum 2.0-mil dry film thickness.

B. Touchup Painting: Cleaning and touchup painting of field welds, bolted connections, and abraded areas of shop paint are specified in Division 9 Section “Painting".

C. Galvanized Surfaces: Clean field welds, bolted connections, and abraded areas and repair galvanizing to comply with ASTM A780.

END OF SECTION 055000

SECTION 061000 ROUGH CARPENTRY

PART 1 - GENERAL

1.1 RELATED DOCUMENTS

A. Drawings and general provisions of the Contract, including General and Supplementary Conditions and Division 1 Specification Sections, apply to this Section.

1.2 SUMMARY

A. Section Includes:

1. Framing with dimension lumber.
2. Rooftop equipment bases and support curbs.
3. Wood blocking, cants, and nailers.
4. Wood furring and grounds.
5. Plywood backing panels.
6. Fire-retardant blocking and Plywood

1.3 DEFINITIONS

A. Exposed Framing: Framing not concealed by other construction.

B. Dimension Lumber: Lumber of 2 inches nominal or greater but less than 5 inches nominal in least dimension.

C. Lumber grading agencies, and the abbreviations used to reference them, include the following:

1. NeLMA: Northeastern Lumber Manufacturers' Association.
2. NLGA: National Lumber Grades Authority.
3. RIS: Redwood Inspection Service.
4. SPIB: The Southern Pine Inspection Bureau.
5. WCLIB: West Coast Lumber Inspection Bureau.
6. WWPA: Western Wood Products Association.

1.4 ACTION SUBMITTALS

A. Product Data: For each type of process and factory-fabricated product. Indicate component materials and dimensions and include construction and application details.

1. Include data for wood-preservative treatment from chemical treatment manufacturer and certification by treating plant that treated materials comply with requirements. Indicate type of preservative used and net amount of preservative retained.

2. For products receiving a waterborne treatment, include statement that moisture content of treated materials was reduced to levels specified before shipment to Project site.
3. Include copies of warranties from chemical treatment manufacturers for each type of treatment.
4. Include data for fire-retardant treatment from chemical treatment manufacturer and certification by treating plant that treated materials comply with requirements. Include physical properties of treated materials based on testing by a qualified independent testing agency.

1.5 INFORMATIONAL SUBMITTALS

A. Material Certificates: For dimension lumber specified to comply with minimum allowable unit stresses. Indicate species and grade selected for each use and design values approved by the ALSC Board of Review.

B. Evaluation Reports: For the following, from ICC-ES:

1. Wood-preservative-treated wood.
2. Fire-retardant-treated wood.
3. Power-driven fasteners.
4. Powder-actuated fasteners.
5. Expansion anchors.

1.6 QUALITY ASSURANCE

A. Testing Agency Qualifications: For testing agency providing classification marking for fire-retardant treated material, an inspection agency acceptable to authorities having jurisdiction that periodically performs inspections to verify that the material bearing the classification marking is representative of the material tested.

1.7 DELIVERY, STORAGE, AND HANDLING

A. Stack lumber flat with spacers beneath and between each bundle to provide air circulation. Protect lumber from weather by covering with waterproof sheeting, securely anchored. Provide for air circulation around stacks and under coverings.

PART 2 - PRODUCTS

2.1 WOOD PRODUCTS, GENERAL

A. Lumber: DOC PS 20 and applicable rules of grading agencies indicated. If no grading agency is indicated, provide lumber that complies with the applicable rules of any rules-writing agency certified by the ALSC Board of Review. Provide lumber graded by an agency certified by the ALSC Board of Review to inspect and grade lumber under the rules indicated.

1. Factory mark each piece of lumber with grade stamp of grading agency.
2. Where nominal sizes are indicated, provide actual sizes required by DOC PS 20 for moisture content specified. Where actual sizes are indicated, they are minimum dressed sizes for dry lumber.
3. Provide dressed lumber, S4S, unless otherwise indicated.

B. Maximum Moisture Content of Lumber: 15 percent for 2-inch nominal thickness or less, 19 percent for more than 2-inch nominal thickness unless otherwise indicated.

2.2 WOOD-PRESERVATIVE-TREATED LUMBER

A. Preservative Treatment by Pressure Process: AWPA U1; Use Category UC2 for interior construction not in contact with the ground, Use Category UC3b for exterior construction not in contact with the ground, and Use Category UC4a for items in contact with the ground.

1. Preservative Chemicals: Acceptable to authorities having jurisdiction and containing no arsenic or chromium.
2. For exposed items indicated to receive a stained or natural finish, use chemical formulations that do not require incising, contain colorants, bleed through, or otherwise adversely affect finishes.

B. Kiln-dry lumber after treatment to a maximum moisture content of 19 percent. Do not use material that is warped or that does not comply with requirements for untreated material.

C. Mark lumber with treatment quality mark of an inspection agency approved by the ALSC Board of Review.

D. Application: Treat items indicated on Drawings.

2.3 FIRE-RETARDANT-TREATED MATERIALS

A. General: Where fire-retardant-treated materials are indicated, use materials complying with requirements in this article, that are acceptable to authorities having jurisdiction, and with fire-test-response characteristics specified as determined by testing identical products per test method indicated by a qualified testing agency.

B. Fire-Retardant-Treated Lumber and Plywood by Pressure Process: Products with a flame spread index of 25 or less when tested according to ASTM E 84.

1. Use treatment that does not promote corrosion of metal fasteners.
2. Exterior Type: Treated materials shall comply with requirements specified above for fire-retardant-treated lumber and plywood by pressure process after being subjected to accelerated weathering according to ASTM D 2898. Use for exterior locations and where indicated.
3. Interior Type: Treated materials shall have a moisture content of 28 percent or less when tested according to ASTM D 3201 at 92 percent relative humidity. Use where exterior type is not indicated.

C. Identify fire-retardant-treated wood with appropriate classification marking of qualified testing agency.

D. Application: Treat all rough carpentry blocking & plywood where indicated on the construction documents.

2.4 DIMENSION LUMBER FRAMING

A. Non-Load-Bearing Interior Partitions: Construction, Stud, or No. 3 grade, any species.

2.5 MISCELLANEOUS LUMBER

A. General: Provide miscellaneous lumber indicated and lumber for support or attachment of other construction, including the following:

1. Blocking.
2. Nailers.
3. Rooftop equipment bases and support curbs.
4. Cants.
5. Furring.
6. Grounds.

B. For items of dimension lumber size, provide Standard, Stud, or No. 3 grade lumber of any species.

C. For concealed boards, provide lumber with 15 percent maximum moisture content and any of the following species and grades:

1. Mixed southern pine; No. 2 grade; SPIB.
2. Hem-fir or hem-fir (north); Standard or No. 3 Common grade; NLGA, WCLIB, or WWPA.
3. Eastern softwoods; No. 2 Common grade; NeLMA.
4. Northern species; No. 2 Common grade; NLGA.

D. For blocking not used for attachment of other construction, Utility, Stud, or No. 3 grade lumber of any species may be used provided that it is cut and selected to eliminate defects that will interfere with its attachment and purpose.

E. For blocking and nailers used for attachment of other construction, select and cut lumber to eliminate knots and other defects that will interfere with attachment of other work.

F. For furring strips for installing plywood or hardboard paneling, select boards with no knots capable of producing bent-over nails and damage to paneling.

2.6 PLYWOOD BACKING PANELS

A. Electrical, Phone and Data Equipment Backing Panels: DOC PS 1, fire-retardant treated, in thickness indicated or, if not indicated, not less than 3/4-inch nominal thickness.

2.7 FASTENERS

A. General: Provide fasteners of size and type indicated that comply with requirements specified in this article for material and manufacture.

1. Where rough carpentry is exposed to weather, in ground contact, pressure-preservative treated, or in area of high relative humidity, provide fasteners with hot-dip zinc coating complying with ASTM A 153 or Type 304 stainless steel.

B. Nails, Brads, and Staples: ASTM F 1667.

C. Power-Driven Fasteners: NES NER-272.

D. Wood Screws: ASME B18.6.1.

E. Lag Bolts: ASME B18.2.1.

F. Bolts: Steel bolts complying with ASTM A 307, Grade A; with ASTM A 563 hex nuts and, where indicated, flat washers.

G. Expansion Anchors: Anchor bolt and sleeve assembly of material indicated below with capability to sustain, without failure, a load equal to six times the load imposed when installed in unit masonry assemblies and equal to four times the load imposed when installed in concrete as determined by testing per ASTM E 488 conducted by a qualified independent testing and inspecting agency.

1. Material: Carbon-steel components, zinc plated to comply with ASTM B 633, Class Fe/Zn 5.
2. Material: Stainless steel with bolts and nuts complying with ASTM F 593 and ASTM F 594, Alloy Group 1 or 2.

PART 3 - EXECUTION

3.1 INSTALLATION, GENERAL

A. Set rough carpentry to required levels and lines, with members plumb, true to line, cut, and fitted. Fit rough carpentry to other construction; scribe and cope as needed for accurate fit. Locate furring, nailers, blocking, grounds, and similar supports to comply with requirements for attaching other construction.

B. Framing Standard: Comply with AF&PA's WCD 1, "Details for Conventional Wood Frame Construction," unless otherwise indicated.

C. Install plywood backing panels by fastening to studs or masonry; coordinate locations with utilities requiring backing panels. Install fire-retardant treated plywood backing panels with classification marking of testing agency exposed to view.

D. Shear Wall Panels: Install shear wall panels to comply with manufacturer's written instructions.

E. Provide blocking and framing as indicated and as required to support facing materials, fixtures, specialty items, tv brackets, trim, and other equipment shown on the drawings as Owner furnished equipment.

F. Do not use materials with defects that interfere with function of member or pieces that are too small to use with minimum number of joints or optimum joint arrangement.

G. Comply with AWPA M4 for applying field treatment to cut surfaces of preservative-treated lumber.

1. Use inorganic boron for items that are continuously protected from liquid water.
2. Use copper naphthenate for items not continuously protected from liquid water.

H. Securely attach rough carpentry work to substrate by anchoring and fastening as indicated, complying with the following:

1. NES NER-272 for power-driven fasteners.
2. Table 2304.9.1, "Fastening Schedule," in ICC's International Building Code.

I. Use steel common nails unless otherwise indicated. Select fasteners of size that will not fully penetrate members where opposite side will be exposed to view or will receive finish materials. Make tight connections between members. Install fasteners without splitting wood. Drive nails snug but do not countersink nail heads unless otherwise indicated.

3.2 WOOD GROUND, SLEEPER, BLOCKING, AND NAILER INSTALLATION

A. Install where indicated and where required for screeding or attaching other work. Form to shapes indicated and cut as required for true line and level of attached work. Coordinate locations with other work involved.

B. Attach items to substrates to support applied loading. Recess bolts and nuts flush with surfaces unless otherwise indicated.

C. Provide permanent grounds of dressed, pressure-preservative-treated, key-beveled lumber not less than 1-1/2 inches wide and of thickness required to bring face of ground to exact thickness of finish material. Remove temporary grounds when no longer required.

3.3 WOOD FURRING INSTALLATION

A. Install level and plumb with closure strips at edges and openings. Shim with wood as required for tolerance of finish work.

B. Furring to Receive Plywood or Hardboard Paneling: Install 1-by-3-inch nominal-size furring as indicated.

3.4 PROTECTION

A. Protect wood that has been treated with inorganic boron (SBX) from weather. If, despite protection, inorganic boron-treated wood becomes wet, apply EPA-registered borate treatment. Apply borate solution by spraying to comply with EPA-registered label.

B. Protect rough carpentry from weather. If, despite protection, rough carpentry becomes sufficiently wet that moisture content exceeds that specified, apply EPA-registered borate treatment. Apply borate solution by spraying to comply with EPA-registered label.

END OF SECTION 061000

SECTION 061600 - SHEATHING

PART 1 - GENERAL

1.1 RELATED DOCUMENTS

A. Drawings and general provisions of the Contract, including General and Supplementary Conditions and Division 01 Specification Sections, apply to this Section.

1.2 SUMMARY

A. Section includes exterior gypsum-based wall, roof, ceiling and soffit sheathing.

B. Related Requirements:

1. Division 5 Section “Cold-Formed Metal Framing” and Division 9 Section “Non-Structural Metal Framing,” for metal framing designed to accommodate exterior gypsum sheathing.
2. Division 6 Section “Rough Carpentry,” for other types of sheathing not specified in this Section.
3. Division 7 Section “Thermoplastic Polyolefin (TPO) Roofing” for roof sheathing to be installed as part of membrane roofing assemblies.
4. Division 7 Section "Weather Barriers," for water-resistive barriers applied over wall sheathing.
5. Division 7 Section “Joint Sealants” for sealants specified to be used in conjunction with sheathing products.
6. Division 9 Section “Gypsum Board” for interior gypsum-based sheathing and tile backer.

1.3 ACTION SUBMITTALS

A. Product Data: For each type of process and factory-fabricated product. Indicate component materials and dimensions and include construction and application details.

B. Sustainable Design Submittals: Refer to Division 1 Section “LEED Requirements.”

1.4 DELIVERY, STORAGE, AND HANDLING

A. Stack panels flat with spacers beneath and between each bundle to provide air circulation. Protect sheathing from weather by covering with waterproof sheeting, securely anchored. Provide for air circulation around stacks and under coverings.

PART 2 - PRODUCTS

2.1 PERFORMANCE REQUIREMENTS

A. Fire-Test-Response Characteristics: For assemblies with fire-resistance ratings, provide materials and construction identical to those of assemblies tested for fire resistance per ASTM E 119 by a testing and inspecting agency acceptable to authorities having jurisdiction.

1. Fire-Resistance Ratings: Indicated by design designations from UL's "Fire Resistance Directory."

2.2 EXTERIOR WALL SHEATHING

A. Glass-Mat Gypsum Wall Sheathing: ASTM C 1177.

1. Basis-of-Design Product: Subject to compliance with requirements, provide Georgia-Pacific Building Products “DensGlass Sheathing,” or comparable product by one of the following:

a. CertainTeed Corporation.
b. National Gypsum Company.
c. United States Gypsum Co.

2. Type and Thickness: Type X, 5/8 inch thick, unless otherwise indicated.
3. Size: 48 by 96, 108 or 120 inches for vertical installation.

2.3 ROOF SHEATHING

A. Glass-Mat Gypsum Roof Sheathing: ASTM C 1177; to be located within roof assembly above new Auditorium and Stage spaces, as well as for built-up asphalt roofing assemblies (Alternate Bid), as indicated.

1. Basis-of-Design Product: Subject to compliance with requirements, provide Georgia-Pacific Building Products “DensDeck Prime Roof Board,” or comparable product by one of the following:

a. CertainTeed Corporation.
b. National Gypsum Company.
c. United States Gypsum Co.

2. Type and Thickness: Type X, 1/4, 1/2 or 5/8 inch thick, as indicated.
3. Size: 48 by 48 or 96 inches for horizontal installation.

2.4 EXTERIOR CEILING AND SOFFIT SHEATHING

A. Exterior Gypsum Board: ASTM C 1396, with manufacturer’s standard edges.

1. Basis-of-Design Product: Subject to compliance with requirements, provide Georgia-Pacific Building Products "ToughRock Fireguard C Soffit Board," or comparable product by one of the following:

    a. CertainTeed Corporation.
    b. National Gypsum Company.
    c. United States Gypsum Co.

2. Type and Thickness: Type X, 5/8 inch thick.
3. Size: 48 by 96 or 120 inches for horizontal installation.

B. Glass-Mat Gypsum Sheathing Board: ASTM C 1177, with fiberglass mat laminated to both sides and with manufacturer's standard edges; Type X.

1. Basis-of-Design Product: Subject to compliance with requirements, provide Georgia-Pacific Building Products "DensGlass Sheathing," or comparable product by one of the following:

    a. CertainTeed Corporation.
    b. National Gypsum Company.
    c. United States Gypsum Co.

2. Type and Thickness: Type X, 5/8 inch thick.
3. Size: 48 by 96, 108 or 120 inches for horizontal installation.

2.5 FASTENERS

A. General: Provide fasteners of size and type indicated that comply with requirements specified in this article for material and manufacture.

1. For wall sheathing, provide fasteners with hot-dip zinc coating complying with ASTM A 153 of Type 304 stainless steel.

B. Screws for Fastening Gypsum Sheathing to Cold-Formed Metal Framing: Steel drill screws, in length recommended by sheathing manufacturer for thickness of sheathing to be attached, with organic-polymer or other corrosion-protective coating having a salt-spray resistance of more than 800 hours according to ASTM B 117.

1. For steel framing less than 0.0329 inch thick, use screws that comply with ASTM C 1002.
2. For steel framing from 0.033 to 0.112 inch thick, use screws that comply with ASTM C 954.

2.6 SHEATHING JOINT-AND-PENETRATION TREATMENT MATERIALS

A. Sealant for Glass-Mat Gypsum Sheathing: Silicone emulsion sealant complying with ASTM C 834, compatible with sheathing tape and sheathing and recommended by tape and

sheathing manufacturers for use with glass-fiber sheathing tape and for covering exposed fasteners. Refer to Division 7 Section “Joint Sealants.”

1. Sheathing Tape: Self-adhering glass-fiber tape, minimum 2 inches wide, 10 by 10 or 10 by 20 threads per inch, of type recommended by sheathing and tape manufacturers for use with silicone emulsion sealant in sealing joints in glass-mat gypsum sheathing and with a history of successful in-service use.

PART 3 - EXECUTION

3.1 INSTALLATION, GENERAL

A. Do not use materials with defects that impair quality of sheathing or pieces that are too small to use with minimum number of joints or optimum joint arrangement. Arrange joints so that pieces do not span between fewer than three support members.

B. Cut panels at penetrations, edges, and other obstructions of work; fit tightly against abutting construction unless otherwise indicated.

C. Securely attach to substrate by fastening as indicated, complying with the following:

1. NES NER-272 for power-driven fasteners.
2. Table 2304.9.1, "Fastening Schedule," in ICC's "International Building Code."
3. Table R602.3(1), "Fastener Schedule for Structural Members," and Table R602.3(2), "Alternate Attachments," in ICC's "International Residential Code for One- and Two-Family Dwellings."

D. Use common wire nails unless otherwise indicated. Select fasteners of size that will not fully penetrate members where opposite side will be exposed to view or will receive finish materials. Make tight connections. Install fasteners without splitting wood.

E. Coordinate wall sheathing installation with flashing and joint-sealant installation so these materials are installed in sequence and manner that prevent exterior moisture from passing through completed assembly.

F. Do not bridge building expansion joints; cut and space edges of panels to match spacing of structural support elements.

G. Coordinate sheathing installation with installation of materials installed over sheathing so sheathing is not exposed to precipitation or left exposed at end of the workday when rain is forecast.

3.2 GYPSUM SHEATHING INSTALLATION

A. Comply with GA-253 and with manufacturer's written instructions.

1. Fasten gypsum sheathing to cold-formed metal framing with screws.

2. Install boards with a 3/8-inch gap where non-load-bearing construction abuts structural elements.
3. Install boards with a 1/4-inch gap where they abut masonry or similar materials that might retain moisture, to prevent wicking.

B. Apply fasteners so heads bear tightly against face of sheathing, but do not cut into facing.

C. Horizontal Installation: Install sheathing with V-grooved edge down and tongue edge up. Interlock tongue with groove to bring long edges in contact with edges of adjacent panels without forcing. Abut ends over centers of studs, and stagger end joints of adjacent panels not less than one stud spacing. Attach at perimeter and within field of panel to each stud.

1. Space fasteners approximately 8 inches o.c. and set back a minimum of 3/8 inch from edges and ends of panels.

D. Vertical Installation: Install board vertical edges centered over studs or furring. Abut ends and edges of each board with those of adjacent boards. Attach boards at perimeter and within field of board to each stud.

1. Space fasteners approximately 8 inches o.c. and set back a minimum of 3/8 inch from edges and ends of boards.

E. Seal sheathing joints according to sheathing manufacturer's written instructions.

1. Apply glass-fiber sheathing tape to glass-mat gypsum sheathing joints and apply and trowel silicone emulsion sealant to embed entire face of tape in sealant. Apply sealant to exposed fasteners with a trowel so fasteners are completely covered. Seal other penetrations and openings.

END OF SECTION 061600

SECTION 064023 - INTERIOR ARCHITECTURAL WOODWORK

PART 1 - GENERAL

1.1 RELATED DOCUMENTS

A. Drawings and general provisions of the Contract, including General and Supplementary Conditions and Division 01 Specification Sections, apply to this Section.

1.2 SUMMARY

A. This Section includes the following:

1. Interior standing and running wood trim.
2. Interior wood stairs and risers.
3. Interior wood handrails.
4. Interior wood benches.
5. Custom plastic laminate millwork.
6. Accessories for custom millwork.

B. Related Requirements:

1. Division 5 Section “Pipe and Tube Railings” for brackets and accessories required for wood handrails.
2. Division 6 Section "Rough Carpentry" for wood furring, blocking, shims, and hanging strips required for installing woodwork and concealed within other construction before woodwork installation.
3. Division 8 Section “Flush Wood Doors” and “Sound Control Door Assemblies” for wood species and finishes related to interior architectural woodwork.
4. Division 9 Section "Painting" for shop-finishing requirements of interior architectural
5. Division 12 Section “Simulated Stone Fabrication” for solid-surface-material countertops /backsplashes and transaction ledges.

1.3 DEFINITIONS

A. Interior architectural woodwork includes wood furring, blocking, shims, and hanging strips for installing woodwork items unless concealed within other construction before woodwork installation.

1.4 COORDINATION

A. Coordinate sizes and locations of framing, blocking, furring, reinforcements, and other related units of Work specified in other Sections, to ensure that interior architectural woodwork can be supported and installed as indicated.

1.5 PREINSTALLATION MEETINGS

A. Preinstallation Conference: Conduct conference at Project site.

1.6 ACTION SUBMITTALS

A. Product Data: For each product indicated, including high-pressure decorative laminate and accessories, cabinet and millwork hardware and accessories, and finishing materials and processes.

B. Shop Drawings: Show location of each item, dimensioned plans and elevations, large-scale details, attachment devices, and other components.

1. Show details full size.
2. Show locations and sizes of furring, blocking, and hanging strips, including concealed blocking and reinforcement specified in other Sections.
3. Show locations and sizes of cutouts and holes for grommets and other wire management components installed in architectural woodwork.
4. Show laminate panels with dimensions, seams, grain direction and exposed face.

C. Samples for Verification:

1. Miter joints for standing and running trim.
2. Lumber with selected finishes, not less than 5 inches wide by 24 inches long, for each species and cut, finished on 1 side and 1 edge.
3. Plastic laminates.
4. Edging/banding materials.
5. Exposed millwork accessories; one unit for each type and finish.

1.7 INFORMATIONAL SUBMITTALS

A. Qualification Data: For fabricator.

B. Product Certificates: For each type of product, signed by product manufacturer.

1.8 QUALITY ASSURANCE

A. Fabricator Qualifications: Shop that employs skilled workers who custom-fabricate products similar to those required for this Project and whose products have a record of successful in-service performance.

B. Installer Qualifications: Installer who is either employed or approved by the Fabricator.

C. Quality Standard: AWI labeling and certification for fabrication is not required; however, as a standard of quality the Fabricator and Installer shall comply with AWI's "Architectural Woodwork Quality Standards" for grades of interior architectural woodwork indicated for construction, finishes, installation, and other requirements.

D. Mockups: Build mockups to verify selections made under sample submittals and to demonstrate aesthetic effects and set quality standards for materials and execution.

1. Approved mockups may become part of the completed Work if undisturbed at time of Substantial Completion.

1.9 DELIVERY, STORAGE, AND HANDLING

A. Do not deliver woodwork until painting and similar operations that could damage woodwork have been completed in installation areas. If woodwork must be stored in other than installation areas, store only in areas where environmental conditions comply with requirements specified in "Project Conditions" Article.

1.10 PROJECT CONDITIONS

A. Environmental Limitations: Do not deliver or install woodwork until building is enclosed, wet work is complete, and HVAC system is operating and maintaining temperature and relative humidity at occupancy levels during the remainder of the construction period.

B. Field Measurements: Where woodwork is indicated to fit to other construction, verify dimensions of other construction by field measurements before fabrication, and indicate measurements on Shop Drawings. Coordinate fabrication schedule with construction progress to avoid delaying the Work.

1. Locate concealed framing, blocking, and reinforcements that support woodwork by field measurements before being enclosed, and indicate measurements on Shop Drawings.

C. Established Dimensions: Where field measurements cannot be made without delaying the Work, establish dimensions and proceed with fabricating woodwork without field measurements. Provide allowance for trimming at site, and coordinate construction to ensure that actual dimensions correspond to established dimensions.

1.11 COORDINATION

A. Coordinate sizes and locations of framing, blocking, furring, reinforcements, and other related units of Work specified in other Sections to ensure that interior architectural woodwork can be supported and installed as indicated.

PART 2 - PRODUCTS

2.1 MATERIALS

A. Wood Species and Cut for Transparent Finish: Unless otherwise noted, all interior architectural woodwork components for this Project shall consist of White Maple, plain sliced.

B. Wood Products: Comply with the following:

1. Recycled Content of Medium-Density Fiberboard and Particleboard: Postconsumer recycled content plus one-half of pre-consumer recycled content not less than 20 percent.
2. Low-Emitting Materials: Composite wood products shall comply with the testing and product requirements of the California Department of Health Services' "Standard Practice for the Testing of Volatile Organic Emissions from Various Sources Using Small-Scale Environmental Chambers."
3. Medium-Density Fiberboard: ANSI A208.2, Grade MD, made with binder containing no urea formaldehyde.
4. Particleboard: ANSI A208.1, Grade M-2, made with binder containing no urea formaldehyde.
5. Softwood Plywood: DOC PS 1, Medium Density Overlay.
6. Veneer-Faced Panel Products (Hardwood Plywood): HPVA HP-1, made with adhesive containing no urea formaldehyde.

C. High-Pressure Decorative Laminate: NEMA LD 3, grades as indicated, or if not indicated, as required by woodwork quality standard.

1. Available Manufacturers: Subject to compliance with requirements, manufacturers offering high-pressure decorative laminates that may be incorporated into the Work include:

   a. Formica Corporation.
   b. Nevamar Company, LLC; Decorative Products Div.
   c. Panolam Industries International Incorporated.
   d. Wilsonart International; Div. of Premark International, Inc.

2. Color: As selected by Architect from manufacturer’s full range of colors.

2.2 INTERIOR STANDING AND RUNNING TRIM FOR TRANSPARENT FINISH

A. Architectural Woodwork Standards Grade: Custom

B. Hardwood Lumber:

1. Wood Species and Cut: Match species and cut indicated for other types of transparent-finished architectural woodwork located in same area of building unless otherwise indicated.
2. Species: White Maple.
3. Cut: Plain sliced/plain sawn.
4. Wood Moisture Content: 5 to 10 percent.
5. Provide split species on trim that faces areas with different wood species, matching each face of woodwork to species and cut of finish wood surfaces in areas finished.
6. For trim items, other than base wider than available lumber, use veneered construction. Do not glue for width.

7. For veneered base, use hardwood lumber core, glued for width.
8. For base wider than available lumber, glue for width. Do not use veneered construction.
9. Back-out or groove backs of flat trim members and kerf backs of other wide, flat members, except for members with ends exposed in finished work.
10. Assemble moldings in plant to maximum extent possible. Miter corners in plant and prepare for field assembly with bolted fittings designed to pull connections together.
11. Profiles and Locations: Refer to drawings.

2.3 INTERIOR WOOD TREADS AND RISERS FOR TRANSPARENT FINISH

A. Architectural Woodwork Standards Grade: Custom.

1. Species: White Maple.
2. Cut: Plain sliced/plain sawn.
3. Wood Moisture Content: 5 to 10 percent.
4. Provide split species on trim that faces areas with different wood species, matching each face of woodwork to species and cut of finish wood surfaces in areas finished.
5. For trims, treads and risers, and stair handrails wider or thicker than available lumber, use veneered construction. Do not glue for width or thickness.
6. Back-out or groove backs of flat trim members and kerf backs of other wide, flat members, except for members with ends exposed in finished work.
7. Assemble moldings in plant to maximum extent possible. Miter corners in plant and prepare for field assembly with bolted fittings designed to pull connections together.
8. Profiles and Locations: Refer to drawings.
9. Stain: Color to be determined.

2.4 HANDRAILS FOR TRANSPARENT FINISH

A. Architectural Woodwork Standards Grade: Custom.

1. Wood Species: White Maple.
2. Cut: Plain-sawn or sliced.
3. Wood Moisture Content: 5 to 10 percent.
4. Profiles: Round, 1-1/2 inch diameter.

    a. Mortise the bottom of handrails to receive flat stiffening bars and attachment brackets.

5. Locations: Refer to drawings.

2.5 INTERIOR WOOD BENCHES

A. Architectural Woodwork Standards Grade: Custom.

1. Wood Species: White Maple.
2. Cut: Plain-sawn or sliced.
3. Wood Moisture Content: 5 to 10 percent.
4. Locations: Refer to drawings.

2.6 PLASTIC LAMINATE MILLWORK

A. Laminate Cladding for Exposed Surfaces: High-pressure decorative laminate complying with the following requirements:

1. Horizontal Surfaces Other Than Tops: Grade HGS.
2. Vertical Surfaces: Grade VGS.
3. Edges: PVC edge banding, matching laminate in color, pattern and finish.

a. Cabinet Body Edges: 1mm thick.

B. Materials for Semiexposed Surfaces:

1. Surfaces Other Than Drawer Bodies: High-pressure decorative laminate, Grade VGS.

a. Edges of Plastic-Laminate Shelves: PVC edge banding, 1mm thick, matching laminate in color, pattern, and finish.
b. For semiexposed backs of panels with exposed plastic-laminate surfaces, provide surface of high-pressure decorative laminate, Grade VGS.

C. Concealed Backs of Panels with Exposed Plastic Laminate Surfaces: High-pressure decorative laminate, Grade BKL.

D. Edging: Provide 1mm PVC edging for all edges on laminate custom cabinets/millwork.

1. Doellken – Woodtape, Inc.

a. Color: As selected by Architect from manufacturer’s full range of colors.

E. Colors, Patterns, and Finishes: Provide materials and products that result in colors and textures of exposed laminate surfaces complying with the following requirements:

1. As selected by Architect from manufacturer's full range of colors including standard and premium laminates of solid colors, patterns and wood grains. Provide a minimum of (125) laminates.

2.7 MILLWORK ACCESSORIES

A. General: Provide cabinet hardware and accessory materials associated with architectural cabinets, except for items specified in Division 8 Section "Door Hardware”.

B. Accessories: Equal to products manufactured by Doug Mockett & Company, Inc. Refer to Drawings for locations and types.

1. Grommets: For cable passage through countertops; 2-1/2-inch outside diameter EDP grommets with flip-top with slot for wire passage. Equal to “EDP3-2-1/2-Set”. Color: As selected from manufacturers full range.
2. Duplex Junction Box Grommet: Provide Doug Mockett, No. JB-2 at custom millwork access stations where necessary to access power & data outlets.
3. Wire Management Hangers: Equal to “Model No. WM2;” color to be determined.

C. Fabric Wrapped Frameless Tack Boards.

1. Core: Composed of 100 percent post-consumer and post-industrial waste, or 100 percent naturally-sustainable; 1/4-inch fiberboard laminated to 1/4-inch natural cork.
2. Covering Material: Provide Carnegie-Xorel, Pattern: Meteor. 16-oz-per-linear-yard, 100% IRP Xorel. Provide fabric with a flame-spread rating of 25 or less when tested according to ASTM E 84. Provide color and texture as selected by Architect from manufacturer’s full range of (80) colors.
3. Refer to Drawings for locations and sizes.

2.8 MISCELLANEOUS MATERIALS

A. Furring, Blocking, Shims, and Hanging Strips: Softwood or hardwood lumber, kiln dried to less than 15 percent moisture content.

B. Anchors: Select material, type, size, and finish required for each substrate for secure anchorage. Provide nonferrous-metal or hot-dip galvanized anchors and inserts on inside face of exterior walls and elsewhere as required for corrosion resistance. Provide toothed-steel or lead expansion sleeves for drilled-in-place anchors.

C. Adhesives, General: Adhesives shall not contain urea formaldehyde.

D. Low-Emitting Materials: Adhesives shall comply with the testing and product requirements of the California Department of Health Services' "Standard Practice for the Testing of Volatile Organic Emissions from Various Sources Using Small-Scale Environmental Chambers."

E. VOC Limits for Installation Adhesives: Installation adhesives shall comply with the following limits for VOC content when calculated according to 40 CFR 59, Subpart D (EPA Method 24):

1. Wood Glues: 30 g/L.
2. Multipurpose Construction Adhesives: 70 g/L.
3. Contact Adhesive: 250 g/L.

F. Adhesive for Bonding Plastic Laminate: Unpigmented contact cement.

1. Adhesive for Bonding Edges: Hot-melt adhesive or adhesive specified above for faces.

2.9 FASTENERS AND ANCHORS

A. Screws: Select material, type, size, and finish required for each use. Comply with FS FF-S-111 for applicable requirements. For metal framing supports, provide screws as recommended by metal framing manufacturer.

B. Nails: Select material, type, size, and finish required for each use. Comply with FS FF-N-105 for applicable requirements. Provide any type of non-corrosive nail for exterior woodwork.

C. Anchors: Select material, type, size, and finish required by each substrate for secure anchorage. Provide non-ferrous metal or hot-dip galvanized anchors and inserts for exterior installations and elsewhere as required for corrosion-resistance. Provide toothed steel or lead expansion bolt devices for drilled-in-place anchors. Furnish inserts and anchors, as required, to be set into concrete or masonry work for subsequent woodwork anchorage.

2.10 FABRICATION, GENERAL

A. Interior Woodwork Grade: Unless otherwise indicated, provide Premium-grade interior woodwork complying with referenced quality standard.

B. Wood Moisture Content: Comply with requirements of referenced quality standard for wood moisture content in relation to ambient relative humidity during fabrication and in installation areas.

C. Fabricate woodwork to dimensions, profiles, and details indicated. Ease edges to radius indicated for the following:

1. Edges of Solid-Wood (Lumber) Members and Rails: 1/16 inch.
2. Edges of Rails and Similar Members More Than 3/4 Inch Thick: 1/8 inch.

D. Complete fabrication, including assembly, finishing, and hardware application, to maximum extent possible before shipment to Project site. Disassemble components only as necessary for shipment and installation. Where necessary for fitting at site, provide ample allowance for scribing, trimming, and fitting.

1. Notify Architect seven days in advance of the dates and times woodwork fabrication will be complete.
2. Trial fit assemblies at fabrication shop that cannot be shipped completely assembled. Install dowels, screws, bolted connectors, and other fastening devices that can be removed after trial fitting. Verify that various parts fit as intended and check measurements of assemblies against field measurements indicated on Shop Drawings before disassembling for shipment.

E. Shop-cut openings to maximum extent possible to receive hardware, grommets, electrical work, and similar items. Locate openings accurately and use templates or roughing-in diagrams to produce accurately sized and shaped openings. Sand edges of cutouts to remove splinters and burrs.

1. Seal edges of openings in countertops with a coat of varnish.

F. Where indicated, and whenever possible, install glass, plastic or metal panels, stand-offs, inlays, and similar decorative elements in the shop.

2.11 SHOP FINISHING

A. Grade: Provide finishes of same grades as items to be finished.

B. General: Finish architectural woodwork at fabrication shop as specified in this Section. Refer to Division 9 Section "Painting" for finish application requirements. Defer only final touchup, cleaning, and polishing until after installation.

C. Preparation for Finishing: Comply with referenced quality standard for sanding, filling countersunk fasteners, sealing concealed surfaces, and similar preparations for finishing architectural woodwork, as applicable to each unit of work.

1. Backpriming: Apply one coat of sealer or primer, compatible with finish coats, to concealed surfaces of woodwork. Apply two coats to back of paneling and to end-grain surfaces. Concealed surfaces of plastic-laminate-clad woodwork do not require backpriming when surfaced with plastic laminate or thermoset decorative panels. If referencing WI standards and retaining Laboratory grade for casework, insert special finishes required.

PART 3 - EXECUTION

3.1 PREPARATION

A. Before installation, condition woodwork to average prevailing humidity conditions in installation areas.

B. Before installing architectural woodwork, examine shop-fabricated work for completion and complete work as required, including removal of packing and backpriming.

3.2 INSTALLATION

A. Grade: Install woodwork to comply with requirements for the same grade specified in Part 2 for fabrication of type of woodwork involved.

B. Assemble woodwork and complete fabrication at Project site to comply with requirements for fabrication in Part 2, to extent that it was not completed in the shop.

C. Install woodwork level, plumb, true, and straight. Shim as required with concealed shims. Install level and plumb (including tops) to a tolerance of 1/8 inch in 96 inches.

D. Scribe and cut woodwork to fit adjoining work, refinish cut surfaces, and repair damaged finish at cuts.

E. Anchor woodwork to anchors or blocking built in or directly attached to substrates. Secure with countersunk, concealed fasteners and blind nailing as required for complete installation.

1. Use fine finishing nails or finishing screws for exposed fastening, countersunk and filled flush with woodwork and matching final finish if transparent finish is indicated.

F. Standing and Running Trim: Install with minimum number of joints possible, using full-length pieces (from maximum length of lumber available) to greatest extent possible. Do not use pieces less than 36 inches long, except where shorter single-length pieces are necessary. Scarf running joints and stagger in adjacent and related members.

1. Fill gaps, if any, between top of base and wall with plastic wood filler, sand smooth, and finish same as wood base if finished.
2. Install standing and running trim with no more variation from a straight line than 1/8 inch in 96 inches.

G. Stairs: Securely anchor carriages to supporting substrates.

1. Install stairs with treads and risers no more than 1/8 inch from indicated position.
2. Secure with countersunk, concealed fasteners and blind nailing.
3. Use fine finishing nails for exposed fastening, countersunk and filled flush with wood surface.

H. Handrails: Install handrails with no more than 1/8 inch in 96-inch variation from a straight line; install in maximum practical lengths. Neatly join ends of handrails of the same run together using dowels set into each end of handrail a minimum of 2 inches and adhering ends with wood glue. Do not use nails or screws. Install wood handrails using brackets and accessories as indicated in Division 5 Section "Pipe and Tube Railings."

1. Where handrails return to walls, neatly miter cut pieces at a 45-degree angle. Fit pieces together by applying wood glue, and countersinking a lag screw through a pilot hole from the center of the end of the longest piece and into short piece; check for alignment prior to drilling. Plug hole with glued plug, matching species and finish of handrail. Sand and finish to match adjacent railing finish.
2. Splices between sections of handrails shall be a minimum of 24 inches beyond splices of stiffening bars, on either side.
3. Mortise stiffening channels into underside of handrails.

    a. Secure channels to handrails through predrilled holes at 24 inches o.c., minimum, and secure with minimum 1/2-inch-long stainless steel panhead screws; set screws so that heads are flush with surface of channel.
    b. Where the angles of handrails transition, from following the pitch of the stairs or ramp to level above landings, channels shall be precisely clipped and bent to conform to angle change; do not splice channels at these transitions. Channels shall be in continuous lengths, with minimum lengths of 48 inches.
    c. Where handrails return to walls, neatly miter channels at 45-degree angles.

I. Benches: Anchor securely to supporting substrates, as detailed.

J. Millwork: Install without distortion so doors and drawers (by others) fit openings properly and are accurately aligned. Adjust hardware to center doors and drawers in openings and to provide unencumbered operation. Complete installation of hardware and accessory items as indicated.

1. Install cabinets with no more than 1/8 inch in 96-inch sag, bow, or other variation from a straight line.

K. Touch up finishing work specified in this Section after installation of woodwork. Fill nail holes with matching filler where exposed.

L. Refer to Division 9 Sections for final finishing of installed architectural woodwork not indicated to be shop finished.

3.3 ADJUSTING AND CLEANING

A. Repair damaged and defective woodwork, where possible, to eliminate functional and visual defects; where not possible to repair, replace woodwork. Adjust joinery for uniform appearance.

B. Clean, lubricate, and adjust hardware.

C. Clean woodwork on exposed and semiexposed surfaces. Touch up shop-applied finishes to restore damaged or soiled areas.

END OF SECTION 064023

SECTION 064219 – PLASTIC-LAMINATE-FACED WOOD PANELING

PART 1 - GENERAL

1.1 RELATED DOCUMENTS

A. Drawings and general provisions of the Contract, including General and Supplementary Conditions and Division 01 Specification Sections, apply to this Section.

1.2 SUMMARY

A. Section includes:

1. Plastic laminate-faced wood paneling.

B. Related Requirements:

1. Division 6 Section "Rough Carpentry" for wood furring, blocking, shims, and hanging strips required for installing paneling and that are concealed within other construction before paneling installation.
2. Division 6 Section “Interior Architectural Woodwork” for wood trim and other components to be used in combination with panels.

1.3 COORDINATION

A. Coordinate sizes and locations of framing, blocking, furring, reinforcements, and other related units of Work specified in other Sections to ensure that paneling can be installed as indicated.

1.4 PREINSTALLATION MEETINGS

A. Preinstallation Conference: Conduct conference at Project site.

1.5 ACTION SUBMITTALS

A. Product Data: For each type of product including panel products, high-pressure decorative laminate and adhesives.

B. Shop Drawings: For plastic-laminate-faced wood paneling.

1. Include dimensioned plans, elevations, sections, and attachment details.
2. Show details full size.
3. Show locations and sizes of furring and blocking, including concealed blocking specified in other Sections, including fire-resistant-treated backing materials.

C. Samples: Contractor shall provide manufacturer's color PDFs of images of metal reveals and plastic laminate manufacturers for review & approval. Actual samples are NOT required unless specifically requested by the architect/interior designer. Architect to have color choice from full range of laminates, including premium series.

1.6 INFORMATIONAL SUBMITTALS

A. Qualification Data: For Fabricator.

B. Product Certificates: For each type of product, including fire-resistance-treated materials.

C. Evaluation Reports: For fire-retardant-treated materials, from ICC-ES.

1.7 QUALITY ASSURANCE

A. Fabricator Qualifications: Shop that employs skilled workers who custom-fabricate products similar to those required for this Project and whose products have a record of successful in-service performance.

B. Mockups: Build mockups to verify selections made under Sample submittals and to demonstrate aesthetic effects and set quality standards for materials and execution.

1. Build mockups of typical paneling as shown on Drawings.
2. Subject to compliance with requirements, approved mockups may become part of the completed Work if undisturbed at time of Substantial Completion.

1.8 DELIVERY, STORAGE, AND HANDLING

A. Do not deliver paneling until painting and similar operations that could damage paneling have been completed in installation areas. If paneling must be stored in other than installation areas, store only in areas where environmental conditions comply with requirements specified in "Field Conditions" Article.

1.9 FIELD CONDITIONS

A. Environmental Limitations: Do not deliver or install paneling until building is enclosed, wet-work is complete, and HVAC system is operating and will maintain temperature between 60 and 90 deg F and relative humidity between 25 and 55 percent during the remainder of the construction period.

B. Field Measurements: Where paneling is indicated to fit to other construction, verify dimensions of other construction by field measurements before fabrication and indicate measurements on Shop Drawings. Coordinate fabrication schedule with construction progress to avoid delaying the Work.

1. Locate concealed framing, blocking, and reinforcements that support paneling by field measurements before being enclosed and indicate measurements on Shop Drawings.

C. Established Dimensions: Where paneling is indicated to fit to other construction, establish dimensions for areas where woodwork is to fit. Provide allowance for trimming at site, and coordinate construction to ensure that actual dimensions correspond to established dimensions.

1.10 COORDINATION

A. Coordinate sizes and locations of framing, blocking, furring, reinforcements, and other related units of Work specified in other Sections to ensure that paneling can be installed as indicated.

PART 2 - PRODUCTS

2.1 PANELING FABRICATORS

A. Available Manufacturers: Subject to compliance with requirements, manufacturers offering products that may be incorporated into the Work include the following:

1. Formica Corporation.
2. Nevamar Company, LLC; Decorative Products Div.
3. Panolam Industries International Incorporated.
4. Wilsonart International; Div. of Premark International, Inc.

2.2 PANELING, GENERAL

A. Quality Standard: Unless otherwise indicated, comply with the "Architectural Woodwork Standards" for grades of plastic-laminate-faced wood paneling (decorative laminate surfacing) indicated for construction, finishes, installation, and other requirements.

2.3 PLASTIC-LAMINATE-FACED WOOD PANELING

A. Grade: Custom.

B. Plastic Laminate: High-pressure decorative laminate complying with NEMA LD 3 and the following requirements:

1. Faces: Grade HGS.
2. Backs: Grade BKH.
3. Exposed Edges: Self-edged, same as faces.

C. Colors, Patterns, and Finishes: Provide materials and products that result in colors and textures of exposed surfaces complying with the following requirements:

1. Laminate finish, standard and premium, from manufacturer's full range of colors consisting of solid colors, patterns and wood grains.

    a. Provide a minimum of (125) laminates.

2. Finish: Matte.
3. Grain Direction: Horizontal.

D. Panel Core Construction: MDF.

1. Thickness: 3/4-inch.

E. Exposed Panel Edges: Plastic-laminate matching faces or Legs of metal channels forming reveals.

F. Panel Reveals: Black Paint. Refer to drawings for locations:

1. Fry Reglet Millwork – U Channel, 1/2-inch (MWU5050).
2. Finish: Powder Coat.
3. Color: Black.

G. Adhesives for Bonding Plastic Laminate: Catalyzed PVA. Adhesive shall be roller-applied.

1. Adhesive for Bonding Edges: Hot-melt adhesive or adhesive specified above for faces.

H. Assemble panels by gluing and concealed fastening.

2.4 MATERIALS

A. Materials, General: Provide materials that comply with requirements of referenced quality standard for each quality grade specified unless otherwise indicated.

B. Wood Moisture Content: 5 to 10 percent.

C. Composite Wood and Agrifiber Products: Provide materials that comply with requirements of referenced quality standard for each quality grade specified unless otherwise indicated.

1. Medium-Density Fiberboard: ANSI A208.2, Grade 130.

2.5 INSTALLATION MATERIALS

A. Furring, Blocking, Shims, and Hanging Strips: Softwood or hardwood lumber kiln-dried to less than 15 percent moisture content.

B. Anchors: Select material, type, size, and finish required for each substrate for secure anchorage. Provide metal expansion sleeves or expansion bolts for post-installed anchors. Use nonferrous-metal or hot-dip galvanized anchors and inserts at inside face of exterior walls.

2.5 FABRICATION

A. Complete fabrication, including assembly, to maximum extent possible, before shipment to Project site. Disassemble components only as necessary for shipment and installation. Where necessary for fitting at site, provide ample allowance for scribing, trimming, and fitting.

1. Notify Architect seven days in advance of the dates and times paneling fabrication will be complete.

B. Shop cut openings, to maximum extent possible, to receive hardware, appliances, plumbing fixtures, electrical work, and similar items. Locate openings accurately and use templates or roughing-in diagrams to produce accurately-sized and -shaped openings. Sand edges of cutouts to remove splinters and burrs.

PART 3 - EXECUTION

3.1 PREPARATION

A. Before installation, condition paneling to average prevailing humidity conditions in installation areas.

B. Before installing paneling, examine shop-fabricated work for completion and complete work as required, including removal of packing and back-priming.

3.2 INSTALLATION

A. Grade: Install paneling to comply with same grade as paneling to be installed.

B. Install paneling level, plumb, true, and straight with no distortions. Shim as required with concealed shims. Install level and plumb to a tolerance of 1/8 inch in 96 inches. Install with no more than 1/16 inch in 96-inch vertical cup or bow and 1/8 inch in 96-inch horizontal variation from a true plane.

1. For flush paneling with revealed joints, install with variations in reveal width, alignment of top and bottom edges, and flushness between adjacent panels not exceeding 1/32 inch.

C. Anchor paneling to supporting substrate with concealed panel-hanger clips (Z-clips) or other methods indicated on drawings or deemed acceptable to the Architect. Do not use face fastening unless otherwise indicated.

3.3 ADJUSTING AND CLEANING

A. Repair damaged and defective paneling, where possible, to eliminate defects; where not possible to repair, replace paneling. Adjust for uniform appearance.

B. Clean paneling on exposed surfaces. Touch up shop-applied finishes to restore damaged or soiled areas.

END OF SECTION 064219

SECTION 071110 - COMPOSITE SHEET WATERPROOFING

PART 1 – GENERAL

1.1 RELATED DOCUMENTS

A. Drawings and general provisions of the Contract, including General and Supplementary Conditions and Division 1 Specification Sections, apply to this Section.

1.2 SUMMARY

A. This Section includes the following:

1. Below-grade wall waterproofing.
2. Protection / Drainage course
3. Perforated drain pipe
4. Geotextile fabric
5. Below-grade rigid insulation board

B. Related Sections: The following Sections contain requirements that relate to this Section:

1. Division 3 Section "Cast-in-Place Concrete" for concrete placement, curing, and finishing.
2. Division 4 Section "Unit Masonry Assemblies”.

1.3 PERFORMANCE REQUIREMENTS

A. General: Provide waterproofing that prevents the passage of liquid water under hydrostatic pressure and complies with requirements as demonstrated by testing performed by an independent testing agency of manufacturer's current sheet membrane.

1.4 SUBMITTALS

A. General: Submit each item in this Article according to the Conditions of the Contract and Division 1 Specification Sections.

B. Product Data including manufacturer's printed instructions for evaluating, preparing, and treating substrate, technical data, and tested physical and performance properties.

C. Shop Drawings showing locations and extent of waterproofing, including details for substrate joints and cracks, sheet flashings, penetrations, tie-ins with adjoining construction, and other termination conditions. Also, drawing showing drain pipe layout plan and elevations indicating discharge methods and outlet locations.

D. Samples: For the following products:

1. 12 by 12 inch square of waterproofing sheet material.

2. 12 by 12 inch square of insulation board material.
3. 12 by 12 inch square of drainage course material.
4. 12 by 12 inch square of geotextile fabric material.

E. Product test reports from a qualified independent testing agency evidencing compliance of waterproofing with requirements and other physical properties reported by manufacturer based on comprehensive testing of products according to current standard test methods within previous 5 years.

1.5 QUALITY ASSURANCE

A. Installer Qualifications: Engage an Installer who has completed waterproofing similar to that indicated for this Project. Installer to submit certificate signed by waterproofing manufacturer.

B. Single-Source Responsibility: Obtain waterproofing materials from a single manufacturer regularly engaged in manufacturing waterproofing.

C. Mockups: Apply waterproofing to 100 sq. ft. of wall to demonstrate quality of materials and execution of work.

1. If architect determines mockup does not comply with requirements, reapply materials until mockup is approved.
2. Approved mockup may become part of the completed WORK.

D. Preinstallation Conference: Conduct conference at Project site to comply with requirements of Division 1 Section "Project Meetings."

1. Before installing waterproofing, conduct a combined meeting with Owner, Architect, Manufacturers Representative and other concerned entities.
2. Review requirements for waterproofing, including surface preparation specified under other Sections, substrate condition and pretreatment, minimum curing period, forecasted weather conditions, special details and sheet flashings, installation procedures, inspection and testing procedures, and protection and repairs.
3. Notify participants at least 7 days before conference.

1.6. DELIVERY, STORAGE, AND HANDLING

A. Deliver materials to Project site in original packages with seals unbroken, labeled with manufacturer's name, product, date of manufacture, and directions for storage.

B. Store materials in their original undamaged packages in a clean, dry, protected location and within temperature range required by waterproofing manufacturer. Protect stored materials from direct sunlight.

1.7 PROJECT CONDITIONS

A. Environmental Conditions: Apply waterproofing within range of ambient and substrate temperatures recommended by waterproofing manufacturer. Do not apply waterproofing to a damp or wet substrate.

1. Do not apply waterproofing in snow, rain, fog, or mist.

B. Maintain adequate ventilation during preparation and application of waterproofing materials.

1.8 WARRANTY

A. General Warranty: The special warranty specified in this Article shall not deprive the Owner of other rights the Owner may have under other provisions of the Contract Documents and shall be in addition to, and run concurrent with, other warranties made by the Contractor under requirements of the Contract Documents.

B. Special Manufacturers Warranty: Written warranty, signed by waterproofing manufacturer agreeing to replace waterproofing material that does not comply with requirements or that does not remain watertight during specified warranty period.

1. Warranty Period: Five years after date of Substantial Completion.

PART 2 - PRODUCTS

2.1 MANUFACTURERS

A. Available Products: Subject to compliance with requirements, manufacturers offering products that may be incorporated in the Work include, but are not limited to, the following:

1. Rubberized-Asphalt Composite Sheet:

a. CCW MiraDRI 860/861; Carlisle Corporation, Carlisle Coatings & Waterproofing Inc.
b. Bituthene 3000; Grace: W.R. Grace & Co.
c. Sealtight MEL-ROL: W.R. Meadows Inc.

2.2 SELF-ADHERING COMPOSITE SHEET

A. Rubberized-Asphalt Composite Sheet: 60-mil- thick self-adhering sheet consisting of 56 mils of rubberized asphalt laminated to a 4-mil- thick polyethylene film with release liner on adhesive side.

1. Sheet Type: Composite sheet formulated for use with primer or surface conditioner meeting VOC limits of authorities having jurisdiction.
2. Physical Properties: Provide waterproofing complying with the following:

a. Tensile Strength: 250 psi minimum; ASTM D 412, Die C, modified.
b. Ultimate Elongation: 300 percent minimum; ASTM D 412, Die C, modified.
c. Pliability: No cracks when bent 180 degrees over a 1-inch mandrel at minus 25 deg F; ASTM D 146.
d. Puncture Resistance: 40 lbf minimum; ASTM E 154.
e. Water Absorption: 0.15 percent weight-gain maximum after 48-hour immersion at 70 deg F; ASTM D 570.

2.3 AUXILIARY MATERIALS

A. General: Furnish auxiliary materials recommended by waterproofing manufacturer for intended use and compatible with waterproofing sheet membrane.

B. Primer: Liquid primer recommended by manufacturer of sheet waterproofing material for substrate.

C. Sheet Flashing: Self-adhering, rubberized-asphalt composite sheet of same material, construction, and thickness as waterproofing sheet membrane.

D. Protection / Drainage Course: As follows:

1. High-performance, high-strength, three dimensional high-impact polystyrene drainage core, bonded to a non-woven filter fabric on the drainage face and a polymeric sheet adhered to the back side of the core.

    a. Core: thickness; Nominal .40 inch; ASTM D 1777
    b. Fabric: grab tensile strength; 100 lb.; ASTM D 4632.
    c. Core: compressive strength; 15,000 lbs. per sq. ft.; ASTM D 1621.
    d. Core: flow rate installed vertically; 12.5 gpm per sq. ft.; ASTM D 4716.

E. Geotextile Fabric: As follows:

1. Woven monofilament filtration fabric.

    a. Flow rate: 18 gpm per sq. ft.; ASTM D 4491.
    b. Tensile strength: 370 x 250; ASTM D 4632.

F. Termination Bar: As recommended by Waterproofing manufacturer.

G. Drain Pipe: Perforated (PVC) Poly Vinyl Cloride sewer and drain pipe and fittings. Complies with ASTM D 2729.

H. Cap Flashing: Embedded flashing extending outbound concealing top termination of waterproofing assembly. Buried and covered by controlled earth backfill.

1. EPDM: Ethylene Propylene Diene Terpoymer synthetic rubber. Flexible 40 mil elastomeric rubber membrane.

    a. EPDM Flashing, flexible membrane:

        1) Carlisle Pre-Kleened EPDM; Carlisle Coatings & Waterproofing, Incorporated.
        2) Firestone Flashgard Thru-Wall Flashing; Firestone Building Products Co.

2. Adhesives, Primers, and Seam Tapes for Flashings: Flashing manufacturer's standard products or products recommended by the flashing manufacturer for bonding flashing sheets to each other and to substrates. Some rubberized-asphalt flashing products are

0.040 inch (0.8 mm); others are 0.030 inch (0.6 mm). BIA recommends 0.030 inch (0.6 mm) as a minimum.

I. Extruded-Polystyrene Insulation Board: Rigid, square-edged, cellular extruded polystyrene thermal insulation formed from polystyrene base resin by an extrusion process using hydrochlorofluorocarbons as blowing agent to comply with ASTM C 578 for Type IV, compressive strength minimum 25 lbs. psi.

PART 3 - EXECUTION

3.1 EXAMINATION

A. Examine substrates, areas, and conditions under which waterproofing systems will be applied, with Installer present, for compliance with Manufacturers requirements. Do not proceed with installation until unsatisfactory conditions have been corrected.

1. Do not proceed with installation until after minimum concrete curing period recommended by waterproofing manufacturer.
2. Verify substrate is visibly dry and free of moisture. Test for capillary moisture by plastic sheet method according to ASTM D 4263.
3. Notify Architect in writing of anticipated problems using waterproofing over substrate.

3.2 SURFACE PREPARATION

A. Clean, prepare, and treat substrate according to manufacturer's written instructions. Provide clean, dust-free, and dry substrate for waterproofing application.

B Remove grease, oil, form release agents, paints, and other penetrating contaminants from concrete.

C. Remove fins, ridges, mortar, and other projections and fill honeycomb, aggregate pockets, holes, and other voids.

D. Prepare, fill, prime, and treat joints and cracks in substrate. Remove dust and dirt from joints and cracks according to ASTM D 4258.

1. Install membrane strip and center over construction and control joints and cracks exceeding a width of 1/16 inch.

E. Inside Corners: Prepare, prime, and treat inside corners according to waterproofing manufacturer's written instructions.

1. Install membrane strip centered over vertical inside corners. Install 3/4-inch fillets of liquid membrane on horizontal inside corners and as follows:

a. At footing-to-wall intersections, install membrane strip centered over corner.

F. Outside Corners: Prepare and treat outside corners according to waterproofing manufacturer's written instructions.

1. Install strip of membrane 12 inches wide, centered over corner.

G. Prepare, treat, and seal vertical and horizontal surfaces at terminations and penetrations through waterproofing and at drains and protrusions according to waterproofing manufacturer's written instructions.

1. At expansion joints and discontinuous deck-to-wall or deck-to-deck joints, bridge and cover with sheet membrane strips.

3.3 SELF-ADHERING COMPOSITE SHEET APPLICATION

A. Install self-adhering composite sheet according to waterproofing manufacturer's written instructions.

B. Apply primer to substrate at required rate and allow to dry. Limit priming to areas that will be covered by waterproofing membrane in same day. Reprime areas exposed for more than 24 hours.

C. Apply and firmly adhere sheet membrane over area to receive waterproofing. Accurately align sheets and maintain uniform 2-1/2-inch- minimum lap widths and end laps. Overlap and seal seams and stagger end laps to ensure watertight installation.

1. When ambient and substrate temperatures exceed 40 deg F, install manufacturer's standard rubberized-asphalt composite sheet.

D. Apply continuous sheet membrane over membrane strips bridging each type of joint to dimensions indicated or required by manufacturer.

E. Seal exposed edges of membrane terminations not concealed by counterflashings or ending in reglets with mastic or sealant. Top edges, vertically and horizontally, to be sealed by installation of Waterproofing manufacturers mechanically fastened termination bar and concealed by cap flashing membrane.

F. Install sheet membrane and auxiliary materials to tie in adjacent waterproofing.

G. Repair tears, voids, and lapped seams in waterproofing not meeting requirements. Slit and flatten fishmouths and blisters. Patch with sheet membrane extending 6 inches beyond repaired areas in all directions.

3.4 PROTECTION / DRAINAGE COURSE INSTALLATION

A. Install protection / drainage course over waterproofing membrane according to waterproofing manufacturer's written instructions.

3.5 CAP FLASHING INSTALLATION

A. Extend EPDM flexible flashing from a point a minimum of 12-inches below the top edge of the waterproofing membrane, extending vertically up the outboard face of the drainage/protection course, continuing horizontally a minimum of 1¼” into the bottom masonry veneer mortar joint. Provide a minimum 1¼” overlap and adhere to wall cavity vapor retarder material using flashing manufacturer’s approved tape. Cap flashing material to conceal top exposed edge of Waterproofing assembly. Adhere flashing material to outboard face of drainage/protection course using flashing manufacturer’s approved adhesive or tape. Seal laps between lengths of flashing with lap sealant, over lap min. 4”.

3.6 DRAIN PIPE INSTALLATION

A. Install drain pipe with perforations on top according to pipe manufacturer's written instructions. Top of pipe to align with top of concrete footing, setting on a minimum of 2” deep clean approved granular backfill. Cover perforated top half of pipe with geotextile fabric. Install clean approved granular backfill covering pipe a minimum of 12” on top and outboard side. Granular backfill to be wrapped with geotextile fabric.

B. Pipe to drain to finished grade by means of sloped pipe discharges at specific site locations or pumping.

3.7 EXTRUDED-POLYSTYRENE INSULATION BOARD INSTALLATION

A. Install insulation board over waterproofing membrane according to insulation manufacturer's written instructions. Insulation board to be covered with protection/drainage course.

3.8 PROTECTING AND CLEANING

A. Protect waterproofing from damage and wear during application and remainder of construction period, according to manufacturer's written instructions.

B. Where insulation board is being used in conjunction with waterproofing assembly, protect installed insulation from damage due to ultraviolet light exposure, physical abuse, and other causes. Provide temporary coverings where insulation will be subject to abuse and cannot be concealed and protected by permanent construction immediately after installation.

C. Clean spillage and soiling from adjacent construction using cleaning agents and procedures recommended by manufacturer of affected construction.

END OF SECTION 071110

SECTION 072100 - THERMAL INSULATION

PART 1 - GENERAL

1.1 RELATED DOCUMENTS

A. Drawings and general provisions of the Contract, including General and Supplementary Conditions and Division 1 Specification Sections, apply to this Section.

1.2 SUMMARY

A. This Section includes the following:

1. Extruded polystyrene foam-plastic board insulation.
2. Glass-fiber blanket insulation.
3. Nail-base polyisocyanurate board insulation.
4. Mineral-wool blanket.
5. Spray polyurethane foam insulation for use in miscellaneous voids.

B. Related Sections include the following:

1. Division 4 Section "Unit Masonry (Assemblies)" for insulation installed in cavity walls.
2. Division 7 Section “Thermoplastic Polyolefin (TPO) Roofing”, for insulation specified as part of roofing construction.
3. Division 7 Section “Through-Penetration Firestop Systems” for fire safing insulation.
4. Division 7 Section “Foamed-In-Place Insulation” for exterior cavity insulation of additions.
5. Division 9 Section "Gypsum Board” for sound attenuation blankets.

1.3 SUBMITTALS

A. Product Data: For each type of product specified.

B. Product Test Reports: Based on evaluation of comprehensive tests performed by a qualified testing agency, for each product.

C. Research/Evaluation Reports: For foam-plastic insulation, from ICC-ES.

1.4 QUALITY ASSURANCE

A. Source Limitations: Obtain each type of building insulation through one source.

B. Fire-Test-Response Characteristics: Provide insulation and related materials with the fire-test-response characteristics indicated, as determined by testing identical products per test method indicated below by UL or another testing and inspecting agency acceptable to authorities having jurisdiction. Identify materials with appropriate markings of applicable testing and inspecting agency.

1. Surface-Burning Characteristics: ASTM E84.
2. Fire-Resistance Ratings: ASTM E119.
3. Combustion Characteristics: ASTM E136.

1.5 DELIVERY, STORAGE, AND HANDLING

A. Protect insulation materials from physical damage and from deterioration due to moisture, soiling, and other sources. Store inside and in a dry location. Comply with manufacturer's written instructions for handling, storing, and protecting during installation.

B. Protect foam-plastic board insulation as follows:

1. Do not expose to sunlight except to necessary extent for period of installation and concealment.
2. Protect against ignition at all times. Do not deliver foam-plastic board materials to Project site before installation time.
3. Quickly complete installation and concealment of foam-plastic board insulation in each area of construction.

PART 2 - PRODUCTS

2.1 EXTRUDED POLYSTYRENE FOAM-PLASTIC BOARD INSULATION

A. Extruded-Polystyrene Foam-Plastic Board Insulation: ASTM C578, of type and minimum compressive strength indicated below, with maximum flame-spread and smoke-developed indexes of 75 and 450, respectively, per ASTM E84.

1. Thermal Properties: Minimum continuous R-Value of 5.0 per inch; 2-inch-thick shall be the equivalent of R-10.
2. Manufacturers: Subject to compliance with requirements, available manufacturers offering products that may be incorporated into the Work include, but are not limited to, the following:

   a. Dow Chemical Company (The).
   b. DiversiFoam Products.
   c. Owens Corning.
   d. Pactiv Corporation.

3. Foundation Insulation: Type IV, 25 psi; equal to Dow “Styrofoam SquareEdge.”
4. Cavity Wall Insulation: Refer to Division 4 Section “Unit Masonry (Assemblies)”.
5. Roofing Insulation: Refer to Division 7 Section “Thermoplastic Polyolefin (TPO) Roofing” for polyisocyanurate board insulation.
6. Fire Propagation Characteristics: Passes NFPA 285 testing as part of an approved assembly.

2.2 GLASS-FIBER BLANKET INSULATION

A. Manufacturers: Subject to compliance with requirements, available manufacturers offering products that may be incorporated into the Work include, but are not limited to, the following:

1. CertainTeed Corporation.
2. Guardian Building Products, Inc.
3. Johns Manville.
4. Owens Corning.

B. Unfaced Glass-Fiber Blanket Insulation: ASTM C665, Type I; with maximum flame-spread and smoke-developed indexes of 25 and 50, respectively, per ASTM E84; passing ASTM E136 for combustion characteristics.

C. Thermal Properties: Minimum continuous R-Value of 3.2 per inch; 6-inch-thick shall be the equivalent of R-19.

2.3 NAIL BASE POLYISOCYANURATE BOARD INSULATION

A. Nail-Base Polyisocyanurate Board Insulation: Class A thermal rigid insulation composed of closed cell polyisocyanurate foam bonded to 5/8” fire-retardant treated plywood. ASTM C1289, Type V made with Type II, Class 2 foam, of type and minimum compressive strength indicated below, with maximum flame-spread and smoke-developed indexes of 25 and 250, respectively, per ASTM E84.

1. Compressive Strength: 25 psi minimum, complying with ASTM D1621.
2. Resistant to Mold: Passes (10), complying with ASTM D3273.
3. Water Absorption: Less than 0.1% volume; complying with ASTM C209.
4. Moisture Vapor Permeance: Less than 1.2 perms; complying with ASTM E96.

B. Manufacturers: Subject to compliance with requirements, available manufacturers offering products that may be incorporated into the Work include, but are not limited to, the following:

1. Basis of Design: Hunter Panels Xci
2. Carlisle Coatings and Waterproofing: R2+Base

C. Radius Installations: Contractor to score and cut panels as required to fit radius applications indicated. Boards shall be neatly fitted and butted together with small gaps sealed with spray-foam insulation.

D. Thermal Properties: Continuous R-Value of 6.44 per inch (average); 2-1/2-inch thick foam (3.1-inches overall with 5/8” plywood) for the equivalent of R-16.1.

2.4 MINERAL-WOOL BLANKETS

A. Manufacturers: Subject to compliance with requirements, available manufacturers offering products that may be incorporated into the Work include, but are not limited to, the following:

1. Roxul, Inc.
2. Industrial Insulation Group, LLC (IIG-LLC).
3. Thermafiber, Inc.; an Owens Corning company.

B. Mineral-Wool Blanket, Unfaced: ASTM C665, Type I (blankets without membrane facing); consisting of fibers; with maximum flame-spread and smoke-developed indexes of 25 and 50, respectively, per ASTM E84; passing ASTM E136 for combustion characteristics.

1. For use in firestopping assemblies, as indicated.

2.5 INSULATION FASTENERS

A. Adhesively Attached, Spindle-Type Anchors: Plate welded to projecting spindle; capable of holding insulation of specified thickness securely in position indicated with self-locking washer in place.

1. Products: Subject to compliance with requirements, available products that may be incorporated into the Work include, but are not limited to, the following:

a. AGM Industries, Inc.; Series T TACTOO Insul-Hangers.
b. Gemco; Spindle Type.

2. Plate: Perforated, galvanized carbon-steel sheet, 0.030 inch thick by 2 inches square.
3. Spindle: Copper-coated, low-carbon steel; fully annealed; 0.105 inch in diameter; length to suit depth of insulation indicated.

2.6 ACCESSORIES

A. Insulation for Miscellaneous Voids:

1. Glass-Fiber Insulation: ASTM C764, Type II, loose fill; with maximum flame-spread and smoke-developed indexes of 5, per ASTM E84.
2. Spray Polyurethane Foam Insulation: ASTM C1029, Type II, closed cell, with maximum flame-spread and smoke-developed indexes of 75 and 450, respectively, per ASTM E84.

B. Adhesive for Bonding Insulation: Product compatible with insulation and air and water barrier materials, and with demonstrated capability to bond insulation securely to substrates without damaging insulation and substrates.

PART 3 - EXECUTION

3.1 PREPARATION

A. Clean substrates of substances that are harmful to insulation or vapor retarders, including removing projections capable of puncturing vapor retarders, or that interfere with insulation attachment.

3.2 INSTALLATION, GENERAL

A. Comply with insulation manufacturer's written instructions applicable to products and applications indicated.

B. Install insulation that is undamaged, dry, and unsoiled and that has not been left exposed to ice, rain, or snow at any time.

C. Extend insulation to envelop entire area to be insulated. Cut and fit tightly around obstructions and fill voids with insulation. Remove projections that interfere with placement.

D. Provide sizes to fit applications indicated and selected from manufacturer's standard thicknesses, widths, and lengths. Apply single layer of insulation units to produce thickness indicated unless multiple layers are otherwise shown or required to make up total thickness.

3.3 INSTALLATION OF FOUNDATION WALL INSULATION

A. Butt panels together for tight fit. Prepare panels for one of the following attachment methods.

B. Anchor Installation: Install board insulation on concrete substrates by adhesively attached, spindle-type insulation anchors as follows:

1. Fasten insulation anchors to concrete substrates with insulation anchor adhesive according to anchor manufacturer's written instructions. Space anchors according to insulation manufacturer's written instructions for insulation type, thickness, and application.
2. Apply insulation standoffs to each spindle to create cavity width indicated on Drawings between concrete substrate and insulation.
3. After adhesive has dried, install board insulation by pressing insulation into position over spindles and securing it tightly in place with insulation-retaining washers, taking care not to compress insulation.
4. Where insulation will not be covered by other building materials, apply capped washers to tips of spindles.

C. Adhesive Installation: Install with adhesive or press into tacky waterproofing or dampproofing according to manufacturer's written instructions.

3.4 INSTALLATION OF BELOW-GRADE INSULATION

A. On vertical surfaces, including at composite sheet waterproofing assemblies, set insulation units using manufacturer's recommended adhesive or loosely laid according to manufacturer's written instructions.

1. If not otherwise indicated, extend insulation a minimum of 24 inches below exterior grade line.

3.5 INSTALLATION OF INSULATION FOR FRAMED CONSTRUCTION

A. Apply insulation units to substrates by method indicated, as detailed on Drawings, and complying with manufacturer's written instructions. If no specific method is indicated, bond units to substrate with adhesive or use mechanical anchorage to provide permanent placement and support of units.

B. Foam-Plastic Board Insulation: Seal joints between units by applying adhesive, mastic, or sealant to edges of each unit to form a tight seal as units are shoved into place. Fill voids in completed installation with adhesive, mastic, or sealant as recommended by insulation manufacturer.

C. Glass-Fiber or Mineral-Wool Blanket Insulation: Install where indicated on Drawings and in all voids and cavities in the building's thermal envelope formed by framing members according to the following requirements:

1. Use insulation widths and lengths that fill the voids and cavities formed by framing members. If more than one length is required to fill the void or cavity, provide lengths that will produce a snug fit between ends.
2. Where indicated on Drawings, place insulation in cavities formed by framing members to produce a friction fit between edges of insulation and adjoining framing members.
3. Maintain 3-inch clearance of insulation around recessed lighting fixtures not rated for or protected from contact with insulation.
4. For metal-framed wall cavities where cavity heights exceed 96 inches, support unfaced blankets mechanically and support faced blankets by taping flanges of insulation to flanges of metal studs.
5. Vapor-Retarder-Faced Blankets: Tape joints and ruptures in vapor-retarder facings, and seal each continuous area of insulation to ensure airtight installation.

    a. Set units in exterior walls with facing placed toward interior of construction.
    b. Set units in interior walls with facing placed toward areas of high humidity, unless otherwise indicated.

D. Miscellaneous Voids: Install insulation in miscellaneous voids and cavity spaces where required to prevent gaps in insulation using the following materials:

1. Loose-Fill Insulation: Compact to approximately 40 percent of normal maximum volume equaling a density of approximately 2.5 lb/cu. ft.
2. Spray Polyurethane Insulation: Apply according to manufacturer's written instructions.

3.6 INSTALLATION OF INSULATION FOR CONCRETE SUBSTRATES

A. Install board insulation on concrete substrates by adhesively attached, spindle-type insulation anchors as follows:

1. Fasten insulation anchors to concrete substrates with insulation anchor adhesive according to anchor manufacturer's written instructions. Space anchors according to insulation manufacturer's written instructions for insulation type, thickness, and application indicated.

2. Apply insulation standoffs to each spindle to create cavity width indicated between concrete substrate and insulation.
3. After adhesive has dried, install board insulation by pressing insulation into position over spindles and securing it tightly in place with insulation-retaining washers, taking care not to compress insulation below indicated thickness.
4. Where insulation will not be covered by other building materials, apply capped washers to tips of spindles.

3.7 PROTECTION

A. Protect installed insulation from damage due to harmful weather exposures, physical abuse, and other causes. Provide temporary coverings or enclosures where insulation is subject to abuse and cannot be concealed and protected by permanent construction immediately after installation.

END OF SECTION 072100

SECTION 072119 - FOAMED-IN-PLACE INSULATION

PART 1 - GENERAL

1.1 RELATED DOCUMENTS

A. Drawings and general provisions of the Contract, including General and Supplementary Conditions and Division 01 Specification Sections, apply to this Section.

1.2 SUMMARY

A. Section Includes:

1. Closed-cell and open-cell spray polyurethane foam insulation, also referenced as “spray-applied foam insulation” or “spray foam insulation,” primarily for thermal requirements.
2. Sprayed cellulose fiber acoustical insulation, primarily for acoustical requirements.

B. Related Requirements:

1. Division 4 Section “Unit Masonry Assemblies” for foamed-in-place masonry insulation required for thermal, acoustical and fire resistance requirements.
2. Division 7 Section "Thermal Insulation" for foam-plastic board insulation.

1.3 ACTION SUBMITTALS

A. Product Data: For each type of product; include certification of products tested to meet or exceed criteria indicated.

B. Sustainable Design Submittals: Refer to Division 1 Section “LEED Requirements.”

C. Shop Drawings:

1. Floor Plans: Scaled not less than 1-1/2 inches equaling 12 inches, symbolically indicating each location and type of foamed-in-place insulation, which shall cross-reference typical and special details.
2. Details: Scaled not less than 1-1/2 inches equaling 12 inches, indicating typical and special conditions of applications onto each type of substrate, including transition membrane details for each type of material change required, insulation stops, insulation thicknesses for each condition, including minimum thermal, fire resistance and acoustical values to be achieved for each type.

1.4 INFORMATIONAL SUBMITTALS

A. Qualification Data: For Installer.

B. Product Test Reports: For each product, for tests performed by a qualified testing agency.

C. Evaluation Reports: For spray-applied polyurethane foam-plastic insulation and cellulose-fiber insulation, from ICC-ES.

D. Compatibility Reports: Certification from spray-applied polyurethane insulation manufacturer indicating foamed-in-place insulation is chemically and adhesively compatible with all adjoining cavity wall assembly materials, including, but not limited to, membrane and metal flashing materials, sealants, backer rods, masonry reinforcing, masonry ties, gaskets, and similar materials. List all materials, if any, that may be damaged by coming into contact with foamed-in-place insulation, either by short-term or long-term contact.

1. If foamed-in-place insulation manufacturer fails to specify such materials in the compatibility report, the manufacturer shall be responsible for any and all costs associated with any material or assembly repairs or replacement due to damages caused by foamed-in-place insulation.

1.5 QUALITY ASSURANCE

A. Manufacturer Qualifications: Manufacturer shall be ISO 9001:2008-certified and possess a current Underwriters Laboratories (UL) Code Evaluation Report for each product.

B. Installer Qualifications: An authorized representative who is trained and approved by manufacturer.

C. Surface-Burning Characteristics: As determined by testing identical products according to ASTM E 84 by a qualified testing agency. Identify products with appropriate markings of applicable testing agency.

D. Fire Resistance Characteristics: As determined by testing identical products according to NFPA 285 by a qualified testing agency. Identify products with appropriate markings of applicable testing agency.

1.6 DELIVERY, STORAGE, AND HANDLING

A. Deliver components to Project site in original, unopened containers, in which each container shall bear the name of manufacturer, product and referenced testing information.

B. Store components between 60 deg F and 90 deg F, or other temperature range as instructed by manufacturer, in a dry location, under suitable protective cover and elevated above the ground or floor.

C. Use components within their labeled shelf-life.

PART 2 - PRODUCTS

2.1 PROPERTIES

A. Insulating Materials: Provide insulation materials complying with requirements indicated.

1. Foamed-In-Place Masonry Insulation: Two-component thermal insulation produced by combining plastic resin and catalyst foaming agent surfactant which, when properly mixed together and with compressed air, a cold-setting foam insulation is created.
2. Applications: For use in the following assemblies:

a. Inside cores of hollow masonry units, where indicated or required for continuous insulation.
b. Within masonry wall cavities, of 2-inch or greater thickness.

3. Thermal Values: Minimum continuous R-Value of 7.1 per inch, per ASTM C 177; 3-inch-thick cavity wall insulation shall equal R-21.3.

B. Fire Resistance Ratings: Provides a minimum of 4 hours of fire resistance rating in walls, per ASTM E 119.

1. For standard 2-hour-rated walls, when used with concrete masonry units of minimum thickness of 8 inches.

C. Acoustical Ratings: For polyurethane foams, when tested with standard 8-inch-thick concrete masonry unit, per ASTM E 90-90:

1. Minimum Sound Transmission Class (STC) rating of 53.
2. Minimum Outdoor-Indoor Transmission Class (OITC) rating of 44.

2.2 CLOSED-CELL SPRAY POLYURETHANE FOAM

A. Closed-Cell Spray Polyurethane Foam: ASTM C 1029, Type II, minimum density of 2.2 lbs/cu. ft. and minimum aged R-value at 1-inch thickness of 7.0 deg F x h x sq. ft./Btu at 75 deg F. Product shall be primarily used as thermal insulation, including cavity wall insulation.

1. Basis-of-Design Product: Subject to compliance with requirements, provide Icynene, Inc. “Icynene ProSeal” or comparable product by one of the following:

a. BASF Corporation.
b. CertainTeed Corporation.
c. Dow Chemical Company (The).
d. Johns Manville; a Berkshire Hathaway company.
e. Volatile Free, Inc.

2.3 OPEN-CELL SPRAY POLYURETHANE FOAM

A. Open-Cell Spray Polyurethane Foam: Spray-applied polyurethane foam using water as a blowing agent. Product shall be primarily used as compressible filler material, including conditions between interior head-of-wall and fluted floor and roof decking, for acoustical and visible closure purposes. Material shall be noncombustible and paintable where exposed to view.

1. Basis-of-Design Product: Subject to compliance with requirements, provide Icynene, Inc. “Icynene Classic” or comparable product by one of the following:

a. BASF Corporation.
b. CertainTeed Corporation.
c. Dow Chemical Company (The).
d. Johns Manville; a Berkshire Hathaway company.

2. Properties:

a. Core Density: 0.5 lb/cu. ft., per ASTM D 1622.

b. Dimensional Stability at 28 Days (Volume Change): 0.0 percent at 158 deg F and 95 percent RH, per ASTM D 2126.
c. Aged Thermal Resistance: R-3.7 at 1 inch.
d. Burn Characteristics: As follows:

1) ASTM E 84: Class 1 surface burning at 5 inches; flame spread index: 20; smoke developed: 340.
2) NFPA 285: Commercial fire resistance: pass.
3) ASTM E 119: Commercial fire resistance: 1-, 2- and 3-hour ratings.
4) ASTM E 918: Non-flammable at 140 deg F.

e. DC 315 Thermal Barrier: Less than 15 minutes, per NFPA 286.
f. Wall and Ceiling Application – Maximum Thickness: 7.5 inches at walls and 11.5 inches at ceilings, per NFPA 286.
g. Acoustical Properties (2x4 wood stud wall): Sound Transmission Class: 37; Noise Reduction Coefficient: .70.

2.4 MISCELLANEOUS MATERIALS

A. Primer: Material recommended by insulation manufacturer where required for adhesion of insulation to substrates.

B. Transition Membranes: Self-adhesive, flexible membrane consisting of rubberized asphalt integrally bonded to high-density, cross-laminated polyethylene film; total minimum thickness of 40 mils, or acceptable fluid-applied membranes. Transition membranes must be proven and documented by the foamed-in-place insulation manufacturer to be compatible with spray foam insulation. Include primers, adhesives, tapes, mastics and termination bars for complete transition membrane system.

1. Membrane Primer: Fast-setting, synthetic rubber-based primer, compatible with transition membrane, spray foam insulation and all substrates; to be applied as needed for adequate transition membrane bonding to substrates.
2. Acceptable Manufacturers: The following is an abbreviated list of approved transition membrane products and manufacturers as documented by the basis-of-design cavity wall foamed-in-place insulation manufacturer; the foamed-in-place insulation manufacturer for this Project shall verify such transition membrane products and accessories:

a. CCW-705; Carlisle Coatings and Waterproofing, Inc.
b. Perm-A-Barrier Wall Flashing; Grace Waterproofing Products.
c. Blueskin SA; Henry Company.
d. Air-Shield; W.R. Meadows, Inc.
e. Proglaze ETA; Tremco, Inc.

C. Insulation Stops: Continuous light-gauge break metal fabrications compatible with insulation type and other adjoining materials, bent at right angle for securing to backup substrates in cavity wall construction; to be placed on either side of control joints, expansion joints and similar construction to prevent foamed-in-place insulation from bridging over gaps; leg depth shall match thickness of insulation.

PART 3 - EXECUTION

3.1 PREPARATION

A. Verify that substrates are clean, dry, and free of substances that are harmful to insulation.

B. Protection: Provide masking, drop cloths, tarpaulins or similar protective coverings to protect adjacent in-place construction from overspray

C. Priming: Prime substrates where recommended by insulation manufacturer to ensure adequate bonding or to prevent discoloration from migratory stains or finishes. Apply primer to comply with insulation manufacturer's written instructions. Confine primers to areas to be insulated; do not allow spillage or migration onto adjoining surfaces.

3.2 INSTALLATION

A. Comply with insulation manufacturer's written instructions applicable to products and applications.

B. Spray insulation to envelop entire area to be insulated and fill voids.

C. Apply in multiple passes to not exceed maximum thicknesses recommended by manufacturer. Do not spray into rising foam.

D. Do not apply insulation within 3 inches of heat-emitting devices or where the temperature is in excess of 200 deg F, as per ASTM C 411 or in accordance with applicable codes.

E. Hollow Concrete Masonry Unit Cores: Install where indicated on the Drawings for sound resistance purposes, as follows:

1. General: Install from building interior, prior to commencement of interior finish material installation, but after all masonry work and concrete slabs are in place.
2. Installation: Fill all open cells and voids in hollow concrete masonry walls, where indicated on Drawings. Pressure-inject foam insulation through a series of 5/8-inch- to 7/8-inch-diameter drilled holes, located in the center of each vertical cell column, starting approximately 4 feet above each floor level and spaced vertically approximately each 10-foot interval above, or as per manufacturer’s written instructions. Continue until all cells are filled.

   a. Patch holes with mortar and finish to match texture of adjacent masonry surfaces prior to application of finishes.

F. Cavity Walls: Install onto face of cavity backup material, applied at rates instructed by manufacturer to achieve insulation thicknesses indicated on Drawings. Provide minimum cured thickness and ensure adequate air space is provided between the insulation and inside face of veneer; add material where application is too light and shave off overly-excessive amounts of insulation where application is too heavy by using manufacturer’s standard methods.

1. Install compatible transition membranes per insulation manufacturer’s written instructions and recommendations, including over flashings, movement joints, wood blocking, openings, penetrations and other dissimilar materials. Terminate transition

membranes with termination bars where necessary to ensure adequate mechanical and adhesive bonding. Where required by transition membrane manufacturer, apply primer to substrates prior to membrane installation; dress and finish all seams and joints with manufacturer-supplied or –approved adhesives, tapes, mastics and termination bars, as instructed by membrane manufacturer.

2. Anchor insulation stops with screws, powder-actuated fasteners, or other approved fasteners at each side of control and expansion joint assemblies and similar construction to prevent insulation from bridging over gaps; ensure stops are of adequate depth.

G. Head of Wall Conditions: Determine space between top of wall and roof or floor deck above, including top of flutes, do not exceed allowable thickness or width permitted by manufacturer. Continuously fill void space flush with both sides of wall. Allow insulation to cure. Where scheduled to remain exposed to view, neatly trim off excess insulation and paint surface to match color of roof deck, unless otherwise indicated.

H. Metal Decking: Review floor and roof deck surfaces and verify all clips, hangers, supports, sleeves and other substrates are completed and securely anchored, and that all penetrations and attachments have been completed to minimize disturbing insulation. Verify that suspended items, including ductwork, piping, conduits and suspended ceiling systems, will not be installed until insulation has fully cured.

I. Miscellaneous Voids: Apply according to manufacturer's written instructions.

3.3 PROTECTION

A. Protect installed insulation from damage due to harmful weather exposures, physical abuse, and other causes.

END OF SECTION 072119

SECTION 072500 - WEATHER BARRIERS

PART 1 - GENERAL

1.1 RELATED DOCUMENTS

A. Drawings and general provisions of the Contract, including General and Supplementary Conditions and Division 01 Specification Sections, apply to this Section.

1.2 SUMMARY

A. Section Includes:

1. Building paper.
2. Building wrap.
3. Flexible flashing.

1.3 ACTION SUBMITTALS

A. Product Data: For building wrap, include data on air and water-vapor permeance based on testing according to referenced standards.

B. Shop Drawings: Show details of weather barriers at terminations, openings, and penetrations. Show details of flexible flashing applications.

1.4 INFORMATIONAL SUBMITTALS

A. Evaluation Reports: For water-resistive barrier and flexible flashing, from ICC-ES.

PART 2 - PRODUCTS

2.1 WATER-RESISTIVE BARRIER

A. Building Paper: ASTM D 226, Type 1 (No. 15 asphalt-saturated organic felt), unperforated or water-vapor-permeable, asphalt-saturated kraft building paper that complies with ICC-ES AC38, Grade D.

B. Building Wrap: ASTM E 1677, Type I air barrier; with flame-spread and smoke-developed indexes of less than 25 and 450, respectively, when tested according to ASTM E 84; UV stabilized; and acceptable to authorities having jurisdiction.

1. Basis-of-Design Manufacturer: Subject to compliance with requirements, provide polymer-based exterior soffit finish system manufactured by DuPont Tyvek CommercialWrap, or comparable products by one of the following:

    a. Dow Building Solutions; Dow Chemical Company (The).
    b. GreenGuard Commercial Building Wrap; Pactiv Building Products.
    c. Raven Industries, Inc.

2. Water-Vapor Permeance: Not less than 75 perms per ASTM E 96, Desiccant Method (Procedure A).
3. Air Permeance: Not more than 0.004 cfm/sq. ft. at 0.3-inch wg when tested according to ASTM E 2178.
4. Allowable UV Exposure Time: Not less than three months.
5. Fire Propagation Characteristics: Passes NFPA 285 testing as part of an approved assembly.

C. Building-Wrap Tape: Pressure-sensitive plastic tape recommended by building-wrap manufacturer for sealing joints and penetrations in building wrap.

2.2 MISCELLANEOUS MATERIALS

A. Flexible Flashing: Composite, self-adhesive, flashing product consisting of a pliable, butyl rubber or rubberized-asphalt compound, bonded to a high-density polyethylene film, aluminum foil, or spun-bonded polyolefin to produce an overall thickness of not less than 0.030 inch.

B. Primer for Flexible Flashing: Product recommended by manufacturer of flexible flashing for substrate.

C. Nails and Staples: ASTM F 1667.

PART 3 - EXECUTION

3.1 WATER-RESISTIVE BARRIER INSTALLATION

A. Cover exposed exterior surface of sheathing with water-resistive barrier securely fastened to framing immediately after sheathing is installed.

B. Cover sheathing with water-resistive barrier as follows:

1. Cut back barrier 1/2 inch on each side of the break in supporting members at expansion- or control-joint locations.
2. Apply barrier to cover vertical flashing with a minimum 4-inch overlap unless otherwise indicated.

C. Building Paper: Apply horizontally with a 2-inch overlap and a 6-inch end lap; fasten to sheathing with galvanized staples or roofing nails.

D. Building Wrap: Comply with manufacturer's written instructions.

1. Seal seams, edges, fasteners, and penetrations with tape.
2. Extend into jambs of openings and seal corners with tape.

3.2 FLEXIBLE FLASHING INSTALLATION

A. Apply flexible flashing where indicated to comply with manufacturer's written instructions.

1. Prime substrates as recommended by flashing manufacturer.
2. Lap seams and junctures with other materials at least 4 inches except that at flashing flanges of other construction, laps need not exceed flange width.
3. Lap flashing over water-resistive barrier at bottom and sides of openings.
4. Lap water-resistive barrier over flashing at heads of openings.
5. After flashing has been applied, roll surfaces with a hard rubber or metal roller to ensure that flashing is completely adhered to substrates.

END OF SECTION 072500

SECTION 074214 - METAL SOFFIT

PART 1 - GENERAL

1.1 RELATED DOCUMENTS

A. Drawings and general provisions of the Contract, including General and Supplementary Conditions and Division 01 Specification Sections, apply to this Section.

1.2 SUMMARY

A. Section includes metal soffit panels, with specialty finish, for interior and exterior applications.

B. Related Sections:

1. Division 6 Sections “Rough Carpentry” and “Gypsum Board” for blocking and sheathing needed to support metal soffit panels.
2. Division 7 Section “Composite Wall Panels” for wall panels to be installed adjacent to or in conjunction with metal soffit panels.
3. Division 7 Section “Joint Sealants” for elastomeric sealants to be installed with metal soffit panels.
4. Division 7 Section “Sheet Metal Flashing and Trim” for break metal flashings, fascia and similar site-fabricated claddings to be installed in conjunction with metal soffit panels.
5. Division 9 Section “Non-Structural Metal Framing” for primary and secondary framing required to support metal soffit panels.

1.3 PREINSTALLATION MEETINGS

A. Preinstallation Conference: Conduct conference at Project site.

1.4 ACTION SUBMITTALS

A. Product Data: For each type of product.

1. Include typical construction details, material descriptions, and dimensions of individual components and profiles for each type of panel and accessory.
2. Include manufacturer’s literature of specialty laminate finishes, including manufacturing and application processes and warranty information.

B. Sustainable Design Submittals:

1. Product Data for Credit MR 4: For products having recycled content, documentation indicating percentages by weight of postconsumer and preconsumer recycled content. Include statement indicating cost for each product having recycled content.

C. Shop Drawings:

1. Include fabrication and installation layouts of metal panels; details of edge conditions, joints, panel profiles, corners, anchorages, attachment system, trim, flashings, closures, and accessories; and special details.
2. Accessories: Include details of flashing, trim, and anchorage systems, at a scale of not less than 1-1/2 inches per 12 inches.

D. Samples for Initial Selection: For each type of metal panel indicated with factory-applied color finishes.

1. Include similar Samples of trim and accessories involving color selection.
2. Include two full sets of specialty laminate film applied to metal chips, representing laminate manufacturer's full range of standard wood grain patterns and colors, as indicated; approximate size of 4 inches square.

E. Samples for Verification: For each type of exposed finish required, prepared on Samples of size indicated below:

1. Metal Panels: 12 inches long by actual panel width. Include fasteners, closures, and other metal panel accessories.

1.5 INFORMATIONAL SUBMITTALS

A. Qualification Data: For Installer.

B. Product Test Reports: For each product, tests performed by a qualified testing agency.

C. Sample Warranties: For special warranties.

1.6 CLOSEOUT SUBMITTALS

A. Maintenance Data: For metal panels to include in maintenance manuals.

1.7 QUALITY ASSURANCE

A. Installer Qualifications: An entity that employs installers and supervisors who are trained and approved by manufacturer.

B. Soffit Finish Qualifications: Finish must conform to the Metal Construction Association's "Certified Premium Paint" designation.

1.8 DELIVERY, STORAGE, AND HANDLING

A. Deliver components, metal panels, and other manufactured items so as not to be damaged or deformed. Package metal panels for protection during transportation and handling.

B. Unload, store, and erect metal panels in a manner to prevent bending, warping, twisting, and surface damage.

C. Stack metal panels horizontally on platforms or pallets, covered with suitable weathertight and ventilated covering. Store metal panels to ensure dryness, with positive slope for drainage of water. Do not store metal panels in contact with other materials that might cause staining, denting, or other surface damage.

D. Retain strippable protective covering on metal panels during installation.

1.9 FIELD CONDITIONS

A. Weather Limitations: Proceed with installation only when existing and forecasted weather conditions permit assembly of metal panels to be performed according to manufacturers' written instructions and warranty requirements.

1.10 COORDINATION

A. Coordinate metal panel installation with rain drainage work, flashing, trim, construction of walls, and other adjoining work to provide a leakproof, secure, and noncorrosive installation.

1.11 WARRANTY

A. Special Warranty: Manufacturer's standard form in which manufacturer agrees to repair or replace components of metal panel systems that fail in materials or workmanship within specified warranty period.

1. Failures include, but are not limited to, the following:

a. Structural failures including rupturing, cracking, or puncturing.
b. Deterioration of metals and other materials beyond normal weathering.

2. Warranty Period: Two years from date of Substantial Completion.

B. Special Warranty on Panel Finishes: Manufacturer's standard form in which manufacturer agrees to repair finish or replace metal panels that show evidence of deterioration of factory-applied finishes within specified warranty period.

1. Exposed Panel Finish: Deterioration includes, but is not limited to, the following:

a. Color fading more than 5 Hunter units when tested according to ASTM D 2244.
b. Chalking in excess of a No. 8 rating when tested according to ASTM D 4214.
c. Cracking, checking, peeling, or failure of paint to adhere to bare metal.

2. Finish Warranty Period: 20 years from date of Substantial Completion.

PART 2 - PRODUCTS

2.1 PERFORMANCE REQUIREMENTS

A. Structural Performance: Provide metal panel systems capable of withstanding the effects of the following loads, based on testing according to ASTM E 1592:

1. Wind Loads: As indicated on Drawings.

B. Thermal Movements: Allow for thermal movements from ambient and surface temperature changes by preventing buckling, opening of joints, overstressing of components, failure of joint sealants, failure of connections, and other detrimental effects. Base calculations on surface temperatures of materials due to both solar heat gain and nighttime-sky heat loss.

1. Temperature Change (Range): 120 deg F, ambient; 180 deg F, material surfaces.

2.2 METAL SOFFIT PANELS

A. General: Provide metal soffit panels, for exterior and interior applications, designed to be installed by lapping and interconnecting side edges of adjacent panels and mechanically attaching through panel to supports using concealed fasteners in side laps. Include accessories required for weathertight installation.

B. Flush-Profile Metal Soffit Panels: Solid panels formed with vertical panel edges and intermediate stiffening ribs symmetrically spaced between panel edges, which form shallow V-groove joints. Panels shall be installed with 1/3 stagger and interior splices.

1. Manufacturers:
   a. Basis-of-Design Product: Subject to compliance with requirements, provide ATAS International “Opaline OPW065 6” panel face with 1/2 inch integral reveal,” or comparable product by one of the following:
      1) USG Paraline
      2) Armstrong Metal Works Classic

2. Aluminum Sheet: Coil-coated sheet, ASTM B 209, alloy as standard with manufacturer, with temper as required to suit forming operations and structural performance required.
   a. Thickness: 0.032 inch.
   b. Surface: Smooth, flat finish.
   c. Color: Woodland Series – Birch Color to be selected by Architect for all soffits.

3. Interior and exterior panels must match in gauge, finish, and profile
4. Panel Coverage: 6.5 inches.
5. Panel Height: 3/4 inch.

2.3 MISCELLANEOUS MATERIALS

A. Miscellaneous Metal Subframing and Furring: ASTM C 645, cold-formed, metallic-coated steel sheet, ASTM A 653, G90 coating designation or ASTM A 792, Class AZ50 aluminum-zinc-alloy coating designation unless otherwise indicated. Provide manufacturer's standard sections as required for support and alignment of metal panel system.

B. Panel Accessories: Provide components required for a complete, weathertight panel system including trim, clips, flashings, sealants, gaskets, fillers, closure strips, and similar items. Match material and finish of metal panels unless otherwise indicated.

   1. Closure Strips: Closed-cell, expanded, cellular, rubber or cross-linked, polyolefin-foam or closed-cell laminated polyethylene; minimum 1-inch-thick, flexible closure strips; cut or premolded to match metal panel profile. Provide closure strips where indicated or necessary to ensure weathertight construction.

C. Flashing and Trim: Provide flashing and trim formed from same material as metal panels as required to seal against weather and to provide finished appearance. Finish flashing and trim with same finish system as adjacent metal panels.

D. Panel Fasteners: Self-tapping screws designed to withstand design loads. Provide exposed fasteners with heads matching color of metal panels by means of plastic caps or factory-applied coating. Provide EPDM or PVC sealing washers for exposed fasteners.

E. Panel Sealants: Provide sealant types recommended by manufacturer that are compatible with panel materials, are nonstaining, and do not damage panel finish.

   1. Sealant Tape: Pressure-sensitive, 100 percent solids, gray polyisobutylene compound sealant tape with release-paper backing. Provide permanently elastic, nonsag, nontoxic, nonstaining tape 1/2 inch wide and 1/8 inch thick.
   2. Joint Sealant: ASTM C 920; elastomeric polyurethane or silicone sealant; of type, grade, class, and use classifications required to seal joints in metal panels and remain weathertight; and as recommended in writing by metal panel manufacturer.
   3. Butyl-Rubber-Based, Solvent-Release Sealant: ASTM C 1311.

2.4 FABRICATION

A. General: Fabricate and finish metal panels and accessories at the factory, by manufacturer's standard procedures and processes, as necessary to fulfill indicated performance requirements demonstrated by laboratory testing. Comply with indicated profiles and with dimensional and structural requirements.

B. Provide panel profile, including major ribs and intermediate stiffening ribs, if any, for full length of panel.

C. Fabricate metal panel joints with factory-installed captive gaskets or separator strips that provide a weathertight seal and prevent metal-to-metal contact, and that minimize noise from movements.

D. Sheet Metal Flashing and Trim: Fabricate flashing and trim to comply with manufacturer's recommendations and recommendations in SMACNA's "Architectural Sheet Metal Manual" that apply to design, dimensions, metal, and other characteristics of item indicated.

1. Form exposed sheet metal accessories that are without excessive oil canning, buckling, and tool marks and that are true to line and levels indicated, with exposed edges folded back to form hems.
2. Seams for Aluminum: Fabricate nonmoving seams with flat-lock seams. Form seams and seal with epoxy seam sealer. Rivet joints for additional strength.
3. Sealed Joints: Form nonexpansion, but movable, joints in metal to accommodate sealant and to comply with SMACNA standards.
4. Conceal fasteners and expansion provisions where possible. Exposed fasteners are not allowed on faces of accessories exposed to view.
5. Fabricate cleats and attachment devices from same material as accessory being anchored or from compatible, noncorrosive metal recommended in writing by metal panel manufacturer.

    a. Size: As recommended by SMACNA's "Architectural Sheet Metal Manual" or metal soffit panel manufacturer for application but not less than thickness of metal being secured.

2.5 FINISHES

A. Protect mechanical and painted finishes on exposed surfaces from damage by applying a strippable, temporary protective covering before shipping.

B. Appearance of Finished Work: Variations in appearance of abutting or adjacent pieces are acceptable if they are within one-half of the range of approved Samples. Noticeable variations in same piece are not acceptable. Variations in appearance of other components are acceptable if they are within the range of approved Samples and are assembled or installed to minimize contrast.

C. Aluminum Panels and Accessories: Biaxially-oriented polyethylene (boPET) specialty laminate film, with UV stabilizer to absorb ultraviolet radiation, protecting chemical structure of polyester finish. Color and pattern shall match that required for metal soffit panel system.

1. Laminate Manufacturer: Equal to “Texcover” film, as manufactured by Sublitex, a Miroglio company.
2. Color and Texture: As selected by Architect from laminate manufacturer’s full range of standard wood grain patterns and colors.

PART 3 - EXECUTION

3.1 EXAMINATION

A. Examine substrates, areas, and conditions, with Installer present, for compliance with requirements for installation tolerances, metal panel supports, and other conditions affecting performance of the Work.

1. Examine framing to verify that girts, angles, channels, studs, and other structural panel support members and anchorage have been installed within alignment tolerances required by metal panel manufacturer.
2. Examine sheathing to verify that sheathing joints are supported by framing or blocking and that installation is within flatness tolerances required by metal panel manufacturer.

B. Examine roughing-in for components and systems penetrating metal panels to verify actual locations of penetrations relative to seam locations of metal panels before installation.

C. Proceed with installation only after unsatisfactory conditions have been corrected.

3.2 PREPARATION

A. Miscellaneous Supports: Install subframing, furring, and other miscellaneous panel support members and anchorages according to ASTM C 754 and metal panel manufacturer's written recommendations.

1. Soffit Framing: Wire tie or clip furring channels to supports, as required to comply with requirements for assemblies indicated.

3.3 METAL PANEL INSTALLATION

A. General: Install metal panels according to manufacturer's written instructions in orientation, sizes, and locations indicated. Install panels perpendicular to supports unless otherwise indicated. Anchor metal panels and other components of the Work securely in place, with provisions for thermal and structural movement.

1. Shim or otherwise plumb substrates receiving metal panels.
2. Flash and seal metal panels at perimeter of all openings. Fasten with self-tapping screws. Do not begin installation until air- or water-resistive barriers and flashings that will be concealed by metal panels are installed.
3. Install screw fasteners in predrilled holes, if provided.
4. Locate and space fastenings in uniform vertical and horizontal alignment.
5. Install flashing and trim as metal panel work proceeds.
6. Locate panel splices over, but not attached to, structural supports. Stagger panel splices and end laps to avoid a four-panel lap splice condition.
7. Provide weathertight escutcheons for pipe- and conduit-penetrating panels.

8. Installation Pattern: Install soffit with a 1/3-lapped, staggered offset for length exceeding 10 feet. Install interior splices at butt joints.

B. Aluminum Panel Fasteners: Use aluminum or stainless-steel fasteners for surfaces exposed to the exterior; use aluminum or galvanized-steel fasteners for surfaces exposed to the interior.

C. Metal Protection: Where dissimilar metals contact each other or corrosive substrates, protect against galvanic action as recommended in writing by metal panel manufacturer.

D. Lap-Seam Metal Panels: Fasten metal panels to supports with fasteners at each lapped joint at location and spacing recommended by manufacturer.

1. Apply panels and associated items true to line for neat and weathertight enclosure.
2. Provide metal-backed washers under heads of exposed fasteners bearing on weather side of metal panels.
3. Locate and space exposed fasteners in uniform vertical and horizontal alignment. Use proper tools to obtain controlled uniform compression for positive seal without rupture of washer.
4. Install screw fasteners with power tools having controlled torque adjusted to compress washer tightly without damage to washer, screw threads, or panels. Install screws in predrilled holes.

E. Watertight Installation:

1. Apply a continuous ribbon of sealant or tape to seal lapped joints of metal panels, using sealant or tape as recommend by manufacturer on side laps of nesting-type panels and elsewhere as needed to make panels watertight.
2. Provide sealant or tape between panels and protruding equipment, vents, and accessories.
3. At panel splices, nest panels with minimum 6-inch end lap, sealed with sealant and fastened together by interlocking clamping plates.

F. Accessory Installation: Install accessories with positive anchorage to building and weathertight mounting, and provide for thermal expansion. Coordinate installation with flashings and other components.

1. Install components required for a complete metal panel system including trim, corners, seam covers, flashings, sealants, gaskets, fillers, closure strips, and similar items. Provide types indicated by metal panel manufacturer; or, if not indicated, provide types recommended by metal panel manufacturer.

G. Flashing and Trim: Comply with performance requirements, manufacturer's written installation instructions, and SMACNA's "Architectural Sheet Metal Manual." Provide concealed fasteners where possible, and set units true to line and level as indicated. Install work with laps, joints, and seams that are permanently watertight.

1. Install exposed flashing and trim that is without buckling, and tool marks, and that is true to line and levels indicated, with exposed edges folded back to form hems. Install sheet metal flashing and trim to fit substrates and to achieve waterproof performance.

2. Expansion Provisions: Provide for thermal expansion of exposed flashing and trim. Space movement joints at a maximum of 10 feet with no joints allowed within 24 inches of corner or intersection. Where lapped expansion provisions cannot be used or would not be waterproof, form expansion joints of intermeshing hooked flanges, not less than 1 inch deep, filled with mastic sealant (concealed within joints).

3.4 CLEANING AND PROTECTION

A. Remove temporary protective coverings and strippable films as metal panels are installed unless otherwise indicated in manufacturer's written installation instructions. On completion of metal panel installation, clean finished surfaces as recommended by metal panel manufacturer. Maintain in a clean condition during construction.

B. After metal panel installation, clear weep holes and drainage channels of obstructions, dirt, and sealant.

C. Replace metal panels that have been damaged or have deteriorated beyond successful repair by finish touchup or similar minor repair procedures.

END OF SECTION 074214

SECTION 074223 - METAL WALL PANELS

PART 1 - GENERAL

1.1 RELATED DOCUMENTS

1.2 SUMMARY

A. Section includes exposed-fastener, lap-seam, perforated metal wall panels, primarily for HVAC rooftop equipment screen walls.

B. Related Sections:

1. Division 5 Section "Metal Fabrications" for pipe columns, channels and other miscellaneous steel shapes for supporting assemblies clad with metal wall panels.
2. Division 5 Section "Cold-Formed Metal Framing" for support framing, including girts, studs, and bracing.
3. Division 7 Section "Sheet Metal Flashing and Trim" for fascia and other trim required to be installed with metal wall panels.

1.3 PERFORMANCE REQUIREMENTS

A. General Performance: Metal wall panel assemblies shall comply with performance requirements without failure due to defective manufacture, fabrication, installation, or other defects in construction.

B. Structural Performance: Provide metal wall panel assemblies capable of withstanding the effects the following loads and stresses within limits and under conditions indicated, based on testing according to ASTM E 1592:

1. Wind Loads: Determine loads based on the following minimum design wind pressures:

a. Uniform pressure of 20 lbf/sq. ft., acting inward or outward.
b. Uniform pressure as indicated on Drawings.

2. Deflection Limits: Metal wall panel assemblies shall withstand wind loads with horizontal deflections no greater than 1/240 of the span.

1.4 ACTION SUBMITTALS

A. Product Data: For each type of product indicated. Include construction details, material descriptions, dimensions of individual components and profiles, and finishes for each type of wall panel and accessory.

B. Shop Drawings: Show fabrication and installation layouts of metal wall panels; details of edge conditions, joints, panel profiles, corners, anchorages, attachment system, trim, flashings, closures, and accessories; and special details. Distinguish between factory-, shop- and field-assembled work.

1. Accessories: Include details of the following items, at a scale of not less than 1-1/2 inches per 12 inches:

    a. Flashing and trim.
    b. Anchorage systems.

C. Samples for Initial Selection: For each type of metal wall panel indicated with factory-applied color finishes.

1. Include similar Samples of trim and accessories involving color selection.
2. Include Samples showing full range of standard perforation patterns.
3. Metal Wall Panels: 12 inches long by actual panel width. Include fasteners and other metal wall panel accessories in profile indicated.

D. Delegated-Design Submittal: For metal wall panel assembly indicated to comply with performance requirements and design criteria, including analysis data signed and sealed by the qualified professional engineer responsible for their preparation.

1.5 INFORMATIONAL SUBMITTALS

A. Qualification Data: For Installer and professional engineer.

B. Warranties: Sample of special warranties.

1.6 CLOSEOUT SUBMITTALS

A. Maintenance Data: For metal wall panels to include in maintenance manuals.

1.7 QUALITY ASSURANCE

A. Installer Qualifications: An employer of workers trained and approved by manufacturer.

B. Testing Agency Qualifications: Qualified according to ASTM E 329 for testing indicated.

C. Source Limitations: Obtain each type of metal wall panel from single source from single manufacturer.

D. Preinstallation Conference: Conduct conference at Project site.

1. Meet with Owner, Architect, Owner's insurer if applicable, testing and inspecting agency representative, metal wall panel Installer, metal wall panel manufacturer's representative, structural-support Installer, and installers whose work interfaces with or affects metal wall panels.
2. Review and finalize construction schedule and verify availability of materials, Installer's personnel, equipment, and facilities needed to make progress and avoid delays.
3. Review methods and procedures related to metal wall panel installation, including manufacturer's written instructions.
4. Examine support conditions for compliance with requirements, including alignment between and attachment to structural members.

5. Review temporary protection requirements for metal wall panel assembly during and after installation.
6. Review wall panel observation and repair procedures after metal wall panel installation.

1.8 DELIVERY, STORAGE, AND HANDLING

A. Deliver components, sheets, metal wall panels, and other manufactured items so as not to be damaged or deformed. Package metal wall panels for protection during transportation and handling.

B. Unload, store, and erect metal wall panels in a manner to prevent bending, warping, twisting, and surface damage.

C. Stack metal wall panels horizontally on platforms or pallets, covered with suitable weathertight and ventilated covering. Store metal wall panels to ensure dryness, with positive slope for drainage of water. Do not store metal wall panels in contact with other materials that might cause staining, denting, or other surface damage.

D. Retain strippable protective covering on metal wall panel for period of metal wall panel installation.

1.9 PROJECT CONDITIONS

A. Weather Limitations: Proceed with installation only when existing and forecasted weather conditions permit assembly of metal wall panels to be performed according to manufacturers' written instructions and warranty requirements.

B. Field Measurements: Verify locations of structural members and wall opening dimensions by field measurements before metal wall panel fabrication, and indicate measurements on Shop Drawings.

1.10 WARRANTY

A. Special Warranty: Manufacturer's standard form in which manufacturer agrees to repair or replace components of metal wall panel assemblies that fail in materials or workmanship within specified warranty period.

1. Failures include, but are not limited to, the following:

a. Structural failures including rupturing, cracking, or puncturing.
b. Deterioration of metals and other materials beyond normal weathering.

2. Warranty Period: Two years from date of Substantial Completion.

B. Special Warranty on Panel Finishes: Manufacturer's standard form in which manufacturer agrees to repair finish or replace metal wall panels that show evidence of deterioration of factory-applied finishes within specified warranty period.

1. Exposed Panel Finish: Deterioration includes, but is not limited to, the following:

a. Color fading more than 5 Hunter units when tested according to ASTM D 2244.
b. Chalking in excess of a No. 8 rating when tested according to ASTM D 4214.
c. Cracking, checking, peeling, or failure of paint to adhere to bare metal.

2. Finish Warranty Period: 20 years from date of Substantial Completion.

PART 2 - PRODUCTS

2.1 PANEL MATERIALS

A. Aluminum Sheet: Coil-coated sheet, ASTM B 209, alloy as standard with manufacturer, with temper as required to suit forming operations and structural performance required.

1. Surface: Smooth, flat finish.
2. Finish Colors: As selected by Architects from line of custom PVDF – Kynar Finishes utilizing RAL colors.
3. Concealed Finish: Apply pretreatment and manufacturer's standard white or light-colored acrylic or polyester backer finish consisting of prime coat and wash coat with a minimum total dry film thickness of 0.5 mil.

B. Panel Sealants:

1. Sealant Tape: Pressure-sensitive, 100 percent solids, gray polyisobutylene compound sealant tape with release-paper backing. Provide permanently elastic, nonsag, nontoxic, nonstaining tape 1/2 inch wide and 1/8 inch thick.

2.2 MISCELLANEOUS MATERIALS

A. Panel Fasteners: Self-tapping screws, bolts, nuts, self-locking rivets and bolts, end-welded studs, and other suitable fasteners designed to withstand design loads. Provide exposed fasteners with heads matching color of metal wall panels by means of factory-applied coating. Use neoprene washers between fasteners and panels.

2.3 EXPOSED-FASTENER, LAP-SEAM METAL WALL PANELS

A. General: Provide factory-formed metal wall panels designed to be field assembled by lapping side edges of adjacent panels and mechanically attaching panels to supports using exposed fasteners in side laps.

B. Corrugated-Profile, Exposed-Fastener Metal Wall Panels for Rooftop Equipment Screen Walls: Formed with alternating curved ribs spaced at 2.67 inches o.c. across width of panel.

1. Basis-of-Design Product: Subject to compliance with requirements, provide Morin Corporation; a Kingspan Group company “C-40-1/2” or comparable product by one of the following:

a. Fabral.
b. ATAS International, Inc.

c. Alcoa Architectural Products (USA).
d. CENTRIA Architectural Systems.
e. UNA-CLAD; Firestone Metal Products.
f. Berridge Manufacturing Company.
g. Industrial Building Panels.
h. MBCI; Div. of NCI Building Systems.
i. McElroy Metal, Inc.
j. Metal Sales Manufacturing Corporation.
k. Petersen Aluminum Corporation.

2. Material: Aluminum sheet, 0.040 inch thick.

   a. Exterior Finish: As selected by Architects from line of custom PVDF – Kynar Finishes utilizing RAL colors.

3. Panel Coverage: 40 inches.
4. Panel Height: 1/2 inch to 5/8 inch.
5. Panel Length: Wherever possible, provide panels in continuous, corner-to-corner lengths to avoid nesting panel splices with visible seams. Panel lengths shall be of lengths indicated on Drawings; where required lengths of screen walls exceed the manufacturer's maximum panel length due to fabrication or transportation limitations, provide maximum lengths permitted without warranting cost increases.
6. Perforations: Reverse pattern. Final hole size and spacing to be determined by Architect upon review of submittal; the following shall be considered:

   a. Hole Shape: Round.
   b. Approximate Hole Size: 3/16 inch diameter or smaller.
   c. Approximate Hole Spacing: 5/16 inch o.c., staggered; approximately 33-percent open area.

2.4 ACCESSORIES

A. Flashing and Trim: Formed from 0.040-inch minimum thickness, clear-anodized aluminum sheet. Provide flashing and trim as required to provide finished appearance. Locations include, but are not limited to, bases, drips, corners, and fascia. Finish flashing and trim with same finish system as adjacent metal wall panels.

2.5 FABRICATION

A. General: Fabricate and finish metal wall panels and accessories at the factory to greatest extent possible, by manufacturer's standard procedures and processes, as necessary to fulfill indicated performance requirements demonstrated by laboratory testing. Comply with indicated profiles and with dimensional and structural requirements.

B. Sheet Metal Accessories: Fabricate flashing and trim to comply with recommendations in SMACNA's "Architectural Sheet Metal Manual" that apply to the design, dimensions, metal, and other characteristics of item indicated.

1. Form exposed sheet metal accessories that are without excessive oil canning, buckling, and tool marks and that are true to line and levels indicated, with exposed edges folded back to form hems.
2. Seams for Aluminum: Fabricate nonmoving seams with flat-lock seams. Form seams and seal with epoxy seam sealer. Rivet joints for additional strength.
3. Sealed Joints: Form nonexpansion but movable joints in metal to accommodate elastomeric sealant to comply with SMACNA standards.
4. Fabricate cleats and attachment devices from same material as accessory being anchored or from compatible, noncorrosive metal recommended by metal wall panel manufacturer.
    a. Size: As recommended by SMACNA's "Architectural Sheet Metal Manual" or metal wall panel manufacturer for application but not less than thickness of metal being secured.

2.6 GENERAL FINISH REQUIREMENTS

A. Comply with NAAMM's "Metal Finishes Manual for Architectural and Metal Products" for recommendations for applying and designating finishes.

B. Protect mechanical finishes on exposed surfaces from damage by applying a strippable, temporary protective covering before shipping.

C. Appearance of Finished Work: Variations in appearance of abutting or adjacent pieces are acceptable if they are within one-half of the range of approved Samples. Noticeable variations in the same piece are not acceptable. Variations in appearance of other components are acceptable if they are within the range of approved Samples and are assembled or installed to minimize contrast.

PART 3 - EXECUTION

3.1 EXAMINATION

A. Examine substrates, areas, and conditions, with Installer present, for compliance with requirements for installation tolerances, metal wall panel supports, and other conditions affecting performance of work.
    1. Examine wall framing to verify that angles, channels, studs, and other structural panel support members and anchorage have been installed within alignment tolerances required by metal wall panel manufacturer.
    2. For the record, prepare written report, endorsed by Installer, listing conditions detrimental to performance of work.

B. Proceed with installation only after unsatisfactory conditions have been corrected.

3.2 PREPARATION

A. Miscellaneous Framing: Install subgirts, base angles, sills, furring, and other miscellaneous wall panel support members and anchorages according to ASTM C 754 and metal wall panel manufacturer's written recommendations.

3.3 METAL WALL PANEL INSTALLATION

A. General: Install metal wall panels according to manufacturer's written instructions in orientation, sizes, and locations indicated on Drawings. Install panels so that corrugations are oriented horizontally, parallel to the roof surface, unless otherwise indicated. Anchor metal wall panels and other components of the Work securely in place, with provisions for thermal and structural movement.

1. Commence metal wall panel installation and install minimum of 300 sq. ft. in presence of factory-authorized representative.
2. Shim or otherwise plumb substrates receiving metal wall panels.
3. Install screw fasteners in predrilled holes.
4. Locate and space fastenings in uniform vertical and horizontal alignment.
5. Install flashing and trim as metal wall panel work proceeds.
6. Locate panel splices over, but not attached to, structural supports. Stagger panel splices and end laps to avoid a four-panel lap splice condition. Unless otherwise indicated, open ends of splices shall face away from the primary building entrances to minimize the visibility of splices from primary views.
7. Align bottom of metal wall panels and fasten with blind rivets, bolts, or self-tapping screws. Fasten flashings and trim around openings and similar elements with self-tapping screws.

B. Fasteners: Use aluminum or stainless-steel fasteners.

C. Metal Protection: Where dissimilar metals will contact each other or corrosive substrates, protect against galvanic action as recommended by metal wall panel manufacturer.

D. Lap-Seam Metal Wall Panels: Fasten metal wall panels to supports with fasteners at each lapped joint at location and spacing recommended by manufacturer.

1. Lap corrugated sheets one full rib corrugation. Apply panels and associated items for neat and weathertight enclosure. Avoid "panel creep" or application not true to line.
2. Provide metal-backed washers under heads of exposed fasteners bearing on weather side of metal wall panels.
3. Locate and space exposed fasteners in uniform vertical and horizontal alignment. Use proper tools to obtain controlled uniform compression for positive seal without rupture of washer.
4. Install screw fasteners with power tools having controlled torque adjusted to compress washer tightly without damage to washer, screw threads, or panels. Install screws in predrilled holes.
5. Provide sealant tape at lapped joints of metal wall panels.
6. Where panel splices are required, nest panels with minimum 6-inch end lap, and fasten together.

a. Pattern: Arrange splices in random fashion to avoid “stepping” effect. Ends of panels between adjacent courses shall be offset a minimum of 4 feet in either direction.

3.4 ACCESSORY INSTALLATION

A. General: Install accessories with positive anchorage to building and weathertight mounting, and provide for thermal expansion. Coordinate installation with flashings and other components.

1. Install components required for a complete metal wall panel assembly including trim, corners, flashings, and similar items.

B. Flashing and Trim: Comply with performance requirements, manufacturer's written installation instructions, and SMACNA's "Architectural Sheet Metal Manual." Provide concealed fasteners where possible, and set units true to line and level as indicated. Install work with laps, joints, and seams to prevent water from penetrating to backup structure side of panels.

1. Install exposed flashing and trim that is without excessive oil canning, buckling, and tool marks and that is true to line and levels indicated, with exposed edges folded back to form hems. Install sheet metal flashing and trim to fit substrates and to result in waterproof and weather-resistant performance.
2. Expansion Provisions: Provide for thermal expansion of exposed flashing and trim. Space movement joints at a maximum of 10 feet with no joints allowed within 24 inches of corner or intersection.

3.5 CLEANING AND PROTECTION

A. Remove temporary protective coverings and strippable films, if any, as metal wall panels are installed, unless otherwise indicated in manufacturer's written installation instructions. On completion of metal wall panel installation, clean finished surfaces as recommended by metal wall panel manufacturer. Maintain in a clean condition during construction.

B. After metal wall panel installation, clear weep holes and drainage channels of obstructions, dirt, and sealant.

C. Replace metal wall panels that have been damaged or have deteriorated beyond successful repair by finish touchup or similar minor repair procedures.

END OF SECTION 074223

SECTION 074243 - COMPOSITE METAL PANEL ASSEMBLIES

PART 1 - GENERAL

1.1 RELATED DOCUMENTS

A. Drawings and general provisions of the Contract, including General and Supplementary Conditions and Division 1 Specification Sections, apply to this Section.

1.2 SUMMARY

A. This Section includes the following:

1. Aluminum-faced composite metal panels with mitered **tight-fit reveal** moldings.
2. Miscellaneous materials and accessories.

a. Metal sub-framing and furring.
b. Composite nail-base polyisocyanurate insulation board.
c. Weather barriers.
d. Weather barrier tape.
e. Fasteners.
f. Sealants.
g. Flashing.

B. Related Sections include the following:

1. Division 4 Section “Unit Masonry Assemblies” for cavity air barrier as a component of composite metal panel assemblies.
2. Division 7 Section “Sheet Metal, Flashing and Trim” for flashing and trim components that are not a part of the composite metal panel system’s standard assembly.
3. Division 7 Section “Joint Sealants” for sealants and caulking installed as a component of composite metal panel assemblies.

1.3 SYSTEM DESCRIPTION

A. Design Requirements:

1. Design system to accommodate movement of components without buckling, failure of joint seals, undue stress on fasteners, or other detrimental effects when subjected to temperature and humidity ranges reasonably anticipated.
2. Design system to accommodate tolerances of structure.

B. Performance Requirements: Submit test data witnessed by an independent testing agency for the following:

1. Fire Propagation Characteristics: Standard test method showing compliance with NFPA

285 for exterior wall assemblies containing combustible components.

2. Structural tests for wind load by "Chamber Method" in compliance with ASTM E72.

    a. Standard test design loading: 20 psf (960 Pa) positive and negative wind load.
    b. Design panel system to withstand code-imposed design loads, and a deflection limit of L/180 shall apply to positive load pressures only.

3. Air Infiltration: 0.06 cfm/sq. ft. (0.3L/s per sq. m) air leakage under a static pressure of 1.57 lbf/sq. ft. (75 Pa) when tested in accordance with ASTM E283.
4. Water Penetration: No uncontrolled water penetration through the standard vertical panel and sealed joints at a static pressure of 6.24 lbf/sq. ft. (300 Pa) when tested in accordance with ASTM E331.
5. Thermal Movements: Allow for thermal movements from ambient and surface temperature changes by preventing buckling, opening of joints, overstressing of components, failure of joint sealants, failure of connections, and other detrimental effects. Base calculations on surface temperatures of materials due to both solar heat gain and nighttime-sky heat loss.

    a. Temperature Change (Range): 120° F (67° C), ambient; 180° F (100° C), material surfaces.

6. Fire Performance: Tested in accordance with ASTM E84, Class A material with a Flame Spread Index of 25 or less and a Smoke Developed Index of 450 or less.

1.4 SUBMITTALS

A. Submit under provisions of Division 1 Section – Submittals.

B. Product Data: Manufacturer's data sheets on each product used, including:

    1. Preparation instructions and recommendations.
    2. Storage and handling requirements and recommendations.
    3. Installation methods.

C. Performance Requirements Submittal: Submit certified test reports and product certificates signed by Manufacturer certifying materials comply with all Performance Requirements Specified above.

    1. Manufacturer’s product certificates must specifically show compliance with NFPA 285.

D. Shop Drawings: Submit shop drawings showing the complete assembly including all substrate components (regardless of provided and installed by others), panel layout, flashings, sub-framing, air and weather barriers, profiles and product components, including anchorage, accessories, finish colors, patterns and textures.

E. Initial Samples: For each finish product specified, provide one complete set of color chips representing Manufacturer's full range of available PVDF Solid colors.

    1. Color to be selected by Architect from manufacturer’s full range of PVDF Solid colors

INCLUDING Metallic Colors (Color is to be Metallic Silver).

F. Verification Samples: For each finish product selected through Initial Samples, provide two verification samples, minimum size 12-inches x 12-inches, representing the actual product, color, and pattern selected.

1.5 QUALITY ASSURANCE

A. Manufacturer Qualifications: Manufacturer capable of providing field service representation during construction, approving acceptable installer and approving application method.

B. Installer Qualifications:

1. Installer experienced in performing Work of this Section who has specialized in installation of Work similar to that required for Project.
2. Panel Installer shall assume responsibility for all components of the exterior panel system including, but not limited to attachment to sub-construction, panel to panel joinery, panel to dissimilar material joinery, and joint seal associated with the panel system.

   a. Proceeding with installation of panel system signifies acceptance of all preceding Work whether performed by Panel Installer or by others.

C. Pre-installation Meetings: Conduct pre-installation meeting at Project site to verify project requirements, substrate conditions, Manufacturer's installation instructions, compliance with specified Performance Requirements, and Manufacturer's warranty requirements.

D. Mock-up: Install mock-up at Project site using specified products. Mock-up shall comply with details on Drawings and with Manufacturer’s approved details. Mock-up shall be of the full system assembly including all substrate components, air and weather barriers, sub-framing, full composite metal panel assembly, flashing, and sealants.

1. Mock-up shall be a minimum of 4-foot x 4-foot and shall include each type of required trim condition. Both vertical and horizontal trim conditions shall be included.
2. Maintain mock-up for duration of construction to be used for workmanship comparison.

1.6 DELIVERY, STORAGE, AND HANDLING

A. Store panels horizontally, off the ground, in Manufacturer's unopened packaging until ready for installation.

B. Examine materials upon receipt to ensure that no damage has occurred during shipment. Store composite metal panels horizontally, covered with a suitable weather tight and ventilated covering. Store composite metal panels to ensure dryness, with a positive slope for drainage of water. Do not store composite metal panels in contact with other materials that might cause staining, denting, or other surface damage. DO NOT allow storage space to exceed 120 deg. F.

C. Store and dispose of solvent-based materials, and materials used with solvent-based materials, in accordance with requirements of local authorities having jurisdiction.

1.7 PROJECT CONDITIONS

A. Maintain environmental conditions (temperature, humidity, and ventilation) within limits recommended by Manufacturer for optimum results. Do not install products under environmental conditions outside Manufacturer's absolute limits.

1.8 WARRANTY

A. Finish Warranty: Warranty shall commence on Date of Substantial Completion.

1. Provide minimum twenty (20) year written Warranty with PVDF fluoropolymer finish color coated metal finish covering color fading, chalking, and film integrity.
2. Finish coating shall not peel, blister, chip, crack or check.
3. Chalking, fading or erosion of finish measured by the following tests:

a. Finish coating shall not chalk in excess of 8 numerical ratings when measured in accordance with ASTM D4214.
b. Finish coating shall not change color or fade in excess of 8 NBS units as determined by ASTM D2244.

B. Material and Installation Warranty: Warranty shall commence on Date of Substantial Completion.

1. Panels shall be warranted not to delaminate (separate) for a period of five (5) years.

a. Installer’s Warranty: Panel System Installer shall warrant the complete installed composite metal panel assembly for all specified installation tolerances, against specified air and water infiltration values, and against expansion, contraction and visible buckling for a period of two (2) years from Date of Substantial Completion.

PART 2 - PRODUCTS

2.1 AVAILABLE PRODUCTS, COMPOSITE METAL PANELS

A. Basis of Design Manufacturer: Citadel Architectural Products, Inc., Indianapolis, IN 46226 T: (800) 446-8828; www.citadelap.com. Subject to compliance with all specified requirements, equal products by other manufacturers are also acceptable.

B. Basis of Design Product: 4mm Envelope 2000 Aluminum-Faced Composite Metal Panels.

The 6mm Omega Lite Aluminum-Faced Composite Metal Panel system by Laminators, Inc. with a corrugated polyallomer core and backer sheet is an acceptable alternative product.

1. Panel Construction: Prefinished aluminum sheet over a thermoset phenolic resin core with backer sheet.
2. Panel Facing: Minimum 0.024-inch thick, smooth aluminum sheet complying with ASTM B209.
3. Panel Backing: Primed smooth aluminum sheet, minimum 0.010-inch thick, aluminum

sheet complying with ASTM B209.

4. Panel Thickness: 4 mm (5/32 inch).
5. Weight: 1.25 lbs/ft²
6. Fire Test Performance: ASTM E84, Class A.
7. Bond Test Performance: Passes ASTM C481-A Cyclic Aging.
8. Finish: Kynar 500 - PVDF fluoropolymer paint system meeting AAMA 2605.
9. Finish Colors: **METALLIC FINISH-** As selected by Architect from Manufacturer's full line of PVDF Solid colors.
10. Aluminum Composite Metal Panel Installation System: One-Piece Tight-Fit Extrusion.

C. Miscellaneous Assembly Components: Provide Manufacturer's standard assembly components including, but not limited to, tracks, channels, foam tapes, adhesives, J-moldings and trims for each assembly condition, expansion shims, and drainage vents required for a complete panel system assembly.

2.2 MISCELLANEOUS MATERIALS AND ACCESSORIES

A. Metal Sub-framing and Furring: ASTM C645, cold-formed metallic-coated steel sheet, ASTM A653, G90 hot-dip galvanized coating. Provide manufacturers standard sections as required for support and alignment of composite metal panel assemblies.

1. Hat-Shaped, Rigid Furring Channels: subject to compliance with specified requirements, available manufacturers offering products that may be incorporated into the Work include, but are not limited to, the following:

    a. ClarkDietrich Building Systems.
    b. Jaimes Industries.
    c. MarinoWARE.
    d. MRI Steel Framing, LLC.
    e. SCAFCO Steel Stud Company.

2. Minimum Base-Metal Thickness: .064-inch (16 gauge).
3. Depth: As indicated on Drawings.

    a. For compliance with NFPA 285, sub-framing when installed behind composite metal panels shall not create an air cavity of more than 2-inches maximum.

B. Composite Nail-Base Polyisocyanurate Insulation Board: Class A thermal rigid insulation composed of closed cell polyisocyanurate foam bonded to 5/8-inch-thick fire-retardant treated plywood. ASTM C1289, Type V made with Type II, Class 2 foam of type and minimum compressive strength indicated below, with maximum flame spread and smoke developed indices of 75 and 450, respectively, per ASTM E84.

1. Manufacturers: Subject to compliance with specified requirements, available manufacturers offering products that may be incorporated into the Work include, but are not limited to, the following:

    a. Basis of Design: Hunter Panels Xci.

b. Carlisle Coatings and Waterproofing: R2+base.

2. Thickness: per drawings.
3. R-Value: per manufacturer.
4. Panel Size: 4-foot x 8-foot.
5. Compressive Strength: 20 psi minimum, complying with ASTM D1621.
6. Resistance to Mold: Passes (10), complying with ASTM D3273.
7. Water Absorption: Less than 0.1% volume; complying with ASTM C209.
8. Moisture Vapor Permeance: Less than 1 perm; complying with ASTM E96.
9. Contains no CFC's, HCFC's or HCF's.

C. Weather Barrier: ASTM E1677, Type I weather barrier; with flame-spread and smoke-developed indexes of less than 15 and 25, respectively, when tested according to ASTM E84; UV stabilized; and acceptable to authorities having jurisdiction.

1. Basis-of-Design Manufacturer: Subject to compliance with specified requirements, provide weather barrier as manufactured by DuPont Corporation; Tyvek Commercial Wrap, or equal product by one of the following:

a. Dow Building Solutions; Dow Chemical Company (The).
b. Green Guard Commercial Building Wrap; Pactiv Building Products.
c. Raven Industries, Inc.

2. For application over composite nail-base insulation and behind composite metal wall panels.
3. Water-Vapor Permeance: 23 perms per ASTM E96, Desiccant Method (Method A).
4. Air Permeance: Not more than 0.001 cfm/sq. ft. at 1.57 psf when tested according to ASTM E2178.
5. Allowable UV Exposure Time: Not less than 9 months.
6. Basis Weight: 2.7 oz/yd^2, when tested in accordance with TAPPI Test Method T-410.
7. Tensile Strength: 38/35 lbs/in., when tested in accordance with ASTMD882.
8. Tear Resistance: 12/10 lbs., when tested in accordance with ASTM D1117.

D. Weather Barrier Tape: Pressure-sensitive plastic tape recommended by weather barrier manufacturer for sealing joints and penetrations in weather barrier.

E. Fasteners: Self tapping screws and washers and other suitable fasteners designed to withstand design loads. Provide type, material, size, corrosion resistance, holding power, and other properties required to fasten miscellaneous metal framing members and trim moldings to substrates.

1. Conceal fasteners. Exposed fasteners are not permitted on faces of panels or accessories, or any components exposed to view.

F. Sealants: Provide Manufacturer's recommended sealants for product installation complying with ASTM C920.

1. Comply with requirements of Division 7 Section "Joint Sealants".

G. Flashing and Closure Trims: In accordance with NFPA 285 requirements, fabricate flashings and concealed closure trims as detailed on Drawings. Concealed closure trims shall be fabricated from 0.032-inch (20 gauge) minimum thickness galvanized steel sheet. Exposed face trims shall be fabricated from 0.050 (16 gauge), coil-coated aluminum sheet to match color of composite metal panel system.

1. Comply with requirements of Division 7 Section "Sheet Metal Flashing and Trim".
2. Comply with recommendations in SMACNA's "Architectural Sheet Metal Manual" then apply to design, dimensions, metal, and other characteristics indicated.
3. Form exposed sheet metal accessories that are without excessive oil canning, buckling, and tool marks, and that are true to line and levels indicated, with exposed edges folded back to form hems.
4. Provide a 12-inch-wide lap strap under the flashing at abutted conditions and seal lapped surfaces with a full bed of non-hardening sealant.
5. Provide a lapped strip of tape at the top of base flashings for positive drainage over flashing.

2.3 FABRICATION

A. General: Fabricate and finish composite metal wall panels and accessories at the factory, by manufacturers standard procedures and processes, as required to fulfill all specified performance requirements evidenced by laboratory testing. Comply with indicated profiles and with dimensional and structural requirements.

1. Tolerances: Length and Width plus or minus 1/16-inch; squareness (diagonals) equal within 1/8-inch.

B. Fabricate composite metal wall panel joints with manufacturer's standard gaskets or separator strips that provide a weathertight seal and prevent metal-to-metal contact, and that minimize noise from movements.

2.4 FINISHES

A. Protect mechanical and painted finishes on exposed surfaces from damage by applying a strippable, temporary protective covering before shipping.

B. Appearance of Finished Work: Variations in appearance of abutting or adjacent pieces are acceptable if they are within one-half of the range of approved Samples. Noticeable variations in same piece are not acceptable. Variations in appearance of other components are acceptable if they are within the range of approved Samples and are assembled or installed to minimize contrast.

C. Aluminum Panels and Accessories:

1. Two-Coat Fluoropolymer: AAMA 2605**. METALLIC FINISH**- Fluoropolymer finish containing not less than 70 percent PVDF resin by weight in color coat. Prepare, pretreat, and apply coating to exposed metal surfaces to comply with coating and resin manufacturers' written instructions.

3.1 EXAMINATION

A. Examine substrates, areas, and conditions, with substrate installer present for compliance with details on Drawings, requirements for structural soundness, installation tolerances, metal panel supports and sub-framing, compliance with the requirements of NFPA 285 and other specified Performance Requirements, and other conditions affecting performance of the Work.

1. Verify that weather barriers have been properly installed over substrates to protect substrate and prevent water penetration into the building.
2. Notify Architect in writing of any unsuitable conditions or deviations from Project requirements found.
3. Installation tolerances shall not exceed the following:

    a. 1/4-inch in any 20 feet length vertically or horizontally.
    b. 1/2-inch in any building elevation.

B. Examine roughing-in conditions for components and systems penetrating composite metal panels to verify actual locations of penetrations relative to seam locations before composite metal panel installation.

C. Proceed with installation only after all unsatisfactory conditions have been corrected.

3.2 PREPARATION

A. Miscellaneous Supports and Sub-Framing: Install sub-framing, miscellaneous supports and anchorages as specified and in the proper orientation and locations required to receive composite metal panel assemblies. Comply with all requirements of Manufacturer's installation instructions and details, including product technical bulletins, product catalog installation instructions, and product carton instructions for installation type selected.

1. At a minimum, provide sub-framing members at each horizontal and vertical joint in the composite metal panel assembly.
2. Ensure that vertical drainage paths are provided in any horizontally oriented sub-framing to allow weeping of moisture that may enter through the composite metal panel assembly.
3. Shim or otherwise plumb sub-framing as required to comply with specified tolerances.

3.3 INSTALLATION

A. General: Comply with all requirements of manufacturer's installation instructions and details on Drawings. Work shall be completed in a workmanlike and weathertight manner by skilled mechanics.

B. Install composite metal panels assemblies according to orientation, sizes, and locations indicated on Drawings. Install panels perpendicular to supports unless otherwise indicated. Anchor composite metal panel assemblies and other components of the Work securely in place, with provisions for thermal and structural movement.

1. Flash and seal composite metal panel assemblies at perimeter of all openings. Do not begin installation until flashings that will be concealed by panels are installed. Set units true to line and level as indicated. Install work with laps, joints, and seams that are permanently watertight. All exposed edges shall be folded back to form hems.

    a. Install closure trims as detailed on Drawings to close off the perimeter of all openings and to comply with the requirements of NFPA 285.

C. Install composite metal panel assemblies using manufacturer’s standard assembly components including, but not limited to, tracks, channels, foam tapes, adhesives, J-moldings and trims for each assembly condition, expansion shims, and drainage vents.

D. Fasteners: Use aluminum or stainless-steel fasteners. Fasteners shall be concealed to the greatest extent possible. Comply with all manufacturer’s written instructions.

E. Expansion Provisions: Provide for thermal expansion of exposed flashing and trim. Space movement joints at a maximum of 10 feet with no joints allowed within 24 inches of corner or intersection.

F. Metal Protection: Where dissimilar metals contact each other or corrosive substrates, protect against galvanic action as recommended in writing by metal composite material panel manufacturer.

G. Sealant Installation: Use only approved sealants as described in manufacturer’s published guidelines. Provide sealants as required by manufacturer’s standard and warranted details.

3.4 FIELD QUALITY CONTROL

A. Manufacturer's Field Service: Provide Manufacturer's field service consisting of periodic and final site visits for inspection of composite metal panel assembly installation for compliance with manufacturer's installation instructions.

3.5 CLEANING AND PROTECTION

A. Protection: Protect installed product and finish surfaces from damage during construction.

B. Cleaning: Remove temporary coverings and protection of adjacent work areas. Repair or replace damaged installed products. Clean installed products in accordance with manufacturer's instructions prior to Owner's acceptance.

C. Touch-up, repair or replace damaged products prior to Substantial Completion.

END OF SECTION

SECTION 075323 ETHYLENE PROPYLENE DIENE MONOMER (EPDM) MEMBRANE ROOFING

PART 1 - GENERAL

1.1 SECTION INCLUDES

A. Adhered EPDM membrane roofing system.

B. Cover board.

C. Roof insulation.

1.2 WORK INCLUDED

A. Include in base bid the removal and infill to match existing 500 sqft of wet/damaged insulation. All remaining wet/damaged removal and infill will be a unit cost.

B. Remove all flashings from parapet, rising walls, roof top unit curbs and penetrations.

C. Contractor to install new retrofit drains at all existing drain locations.

D. Cut all existing blisters in existing modified bitumen membrane prior to installation of HD coverboard.

E. Install new ½” ProtectoR HD coverboard mechanically attached through existing roof system into metal deck. At two (2) concrete deck locations, adhered coverboard to existing roof system.

F. Fully-adhere new JM 60-mil black EPDM over newly installed HD coverboard. Add alternate for upper roof sections to be 90-mil black EPDM with 30-year JM guarantee.

1. Peel tests will be required for adhering HD coverboard to the existing roof system over the concrete deck areas. Gravel surfacing must be removed for proper adhesion.

G. Install new 1/2" plywood on vertical of parapet and rising walls to provide a clean surface to adhere new flashings.

H. Install new reinforced liquid flashing at locations of low flashing heights at rising walls.

I. At window flashing at gymnasium, cut membrane 4-5” down below the window and cut the existing flashing. Remove the flashing below the cut. Peel the remaining existing flashing up to window. Run your new membrane up wall and to underside of window as high as you can and terminate with continuous sealing mastic and termination bar. Bring existing flashing down overtop of new flashing (acting now as a counterflashing to new membrane) and fasten with continuous termination bar and sealing mastic. Install Liquid flashing overtop of this termination.

J. Install new .050 Presto-Lock metal coping around perimeter parapets of roof to be included in manufacturer warranty.

K. Install new .050 Presto-Tite metal fascia around perimeter edges of roof to be included in manufacturer warranty.

L. Provide 20-year manufacturer warranty for all roof sections as part of base bid and add alternate for a 30-year manufacturer warranty for the upper roof sections only.

M. Contractor shall include in base bid the installation of walkway pads at all roof access areas and around all rooftop unit curbs. Walkway pads to be installed around entire unit curb.

N. Contractor is responsible for all measurements including roof area, metal coping/fascia, and core information.

O. Contractor shall provide a unit cost for removing deteriorated wood blocking and install new blocking in kind. New wood blocking shall be attached 16" o.c. Staggered with appropriate fasteners for uplift protection prior to installing new metal coping/fascia.

P. Roofing contractor shall adequately staff roofing project once project has begun. Owner fully expects re-roofing to commence every day, weather permitting.

Q. Contractor is responsible for providing bathroom facilities for the roofers on site. At no time is the roofer to enter the building unless written authorization by owner or property manager is provided.

R. Contractor is responsible for proper watertight temporary tie-ins from new system to existing roofing system during the duration of the construction process.

S. Contractor is responsible for any water leak damage that may occur to the interior of building as a result of damage to existing roof, or temporary tie-in areas during the construction.

T. Contractor to follow all the roofing system manufacturer requirements and details for warranty.

U. Contractor shall include all related items of work as noted herein or indicated on the drawings or otherwise required to complete the specified elements of work and provide necessary warranties for this work.

1.3 REFERENCES

A. Roofing Terminology: Refer to the following publications for definitions of roofing work related terms used in this Section:

1. ASTM D 1079 "Standard Terminology Relating to Roofing and Waterproofing."
2. Glossary of NRCA's "The NRCA Roofing and Waterproofing Manual."
3. Roof Consultants Institute "Glossary of Roofing Terms."
4. Single Ply Roofing Industry (SPRI)

5. International Building Code (IBC)
6. American Society of Civil Engineers (ASCE-7) Minimum Design Loads for Buildings & Other Structures
7. Sheet Metal Terminology and Techniques: SMACNA "Architectural Sheet Metal Manual."

1.4 DESIGN CRITERIA

A. General: Installed roofing membrane systems shall remain watertight; and resist specified wind uplift pressures, thermally induced movement, and exposure to weather without failure.

B. Material Compatibility: Roofing materials shall be compatible with one another under conditions of service and application required, as demonstrated by roofing system manufacturer based on testing and field experience.

C. Installer shall comply with current code requirements based on authority having jurisdiction.

D. Wind Uplift Performance: Roofing system shall meet the intent of systems that have been successfully tested by a qualified testing and inspecting agency to resist wind uplift pressure calculated in accordance with ASCE 7-16.

1. Field Prime-of-Roof Uplift Pressure -12.28 lbf/sq. ft.
2. Field-of-Roof Uplift Pressure -21.37 lbf/sq. ft.
3. Perimeter Uplift Pressure -28.20 lbf/sq. ft.
4. Corner Uplift Pressure -38.43 lbf/sq. ft.

E. Fire-Test-Response Characteristics: Provide roofing materials with the fire-test-response characteristics indicated as determined by testing identical products per test method below by UL 790 or another testing and inspecting agency acceptable to authorities having jurisdiction. Materials shall be identified with appropriate markings from the applicable testing and inspecting agency.

1.5 SUBMITTALS

A. Product Data: Manufacturer's data sheets for each product to be provided.

B. Detail Drawings: Provide roofing system plans, elevations, sections, details, and details of attachment to other Work, including:

1. Base flashings and membrane terminations.
2. Tapered insulation, including slopes.
3. Crickets, saddles, and tapered edge strips, including slopes.
4. Insulation fastening patterns.

C. Verification Samples: Provide for each product specified.

D. Installer Certificates: confirmation that installer is approved, authorized, or licensed by manufacture to install roofing system.

E. Maintenance Data: Refer to Johns Manville's latest published documents on www.JM.com.

F. Guarantees: Provide manufacturer's current guarantee specimen.

G. Roofing sub-contractor shall provide a copy of the final System Assembly Letter issued by Johns Manville Roofing Systems indicating that the products and system to be installed shall be eligible to receive the specified manufacturer's guarantee when installed by a certified JM contractor in accordance with our application requirements, inspected and approved by a JM Technical Representative.

H. Prior to roofing system installation, roofing sub-contractor shall provide a copy of the Guarantee Application Confirmation document issued by Johns Manville Roofing Systems indicating that the project has been reviewed for eligibility to receive the specified guarantee and registered.

1.6 QUALITY ASSURANCE

A. Installer Qualifications: Qualified firm that is approved, authorized, or licensed by roofing system manufacturer to install manufacturer's product who is eligible to receive the specified manufacturer's guarantee.

B. Manufacturer Qualifications: Qualified domestic U.S. owned and based manufacturer that has UL listing or accredited testing agency listing for roofing system identical to that used for this Project.

C. Testing Agency Qualifications: Independent testing agency with the experience and capability to conduct the testing indicated, as documented in accordance with ASTM E329.

D. Test Reports:

1. Roof drain and leader test or submit plumber's verification, if required
2. Core cut, if requested.
3. Roof deck fastener pullout test, if required
4. Bonded pull test, if required.

E. Moisture Survey:

1. Submit prior to installation, results of a non-destructive moisture test of roof system completed by approved third party. Utilize one of the approved methods:

   a. Infrared Thermography
   b. Nuclear Backscatter

F. Source Limitations: Obtain all components from the single source roofing system manufacturer guaranteeing the roofing system. All products used in the system shall be labeled by the single source roofing system manufacturer issuing the guarantee.

G. Fire-Test-Response Characteristics: Roofing materials shall comply with the fire-test-response characteristics indicated as determined by testing identical products per test method below by UL or another testing and inspecting agency acceptable to authorities having jurisdiction. Materials shall be identified with appropriate markings from the applicable testing and inspecting agency.

1.7 DELIVERY, STORAGE, AND HANDLING

A. Deliver roofing materials in original containers with seals unbroken and labeled with manufacturer's name, product brand name and type, date of manufacture, and directions for storage.

B. Store liquid materials in their original undamaged containers in a clean, dry, protected location and within the temperature range required by roofing system manufacturer.

C. Protect roof insulation materials from physical damage and from deterioration by sunlight, moisture, soiling, and other sources. Comply with insulation manufacturer's written instructions for handling, storing, and protecting during installation.

D. Handle and store roofing materials and place equipment in a manner to avoid permanent deflection of deck.

1.8 PROJECT CONDITIONS

A. Weather Limitations: Proceed with installation only when current and forecasted weather conditions permit roofing system to be installed in accordance with manufacturer's written instructions and guarantee requirements.

1.9 GUARANTEES

A. Provide manufacturer's system guarantee equal to Johns Manville's Peak Advantage No Dollar Limit Roofing System Guarantee.

1. Single-source special guarantee includes roofing membrane, base flashings, roofing membrane accessories, roof insulation, fasteners, adhesives, walkway products, manufacturer's edge metal products, and other approved single-source components of roofing system marketed by the manufacturer.
2. Guarantee Period: 30 years from date of Substantial Completion.

B. Installer's Guarantee: Submit roofing Installer's guarantee, including all components of roofing system for the following guarantee period:

1. Guarantee Period: Two years from date of Substantial Completion.

C. Existing Guarantees: Guarantees on existing building elements should not be affected by scope of work.

1. Installer is responsible for coordinating with building owner's representative to verify compliance.

PART 2 - PRODUCTS

2.1 ETHYLENE PROPYLENE DIENE MONOMER ROOFING MEMBRANE - EPDM

A. Non-reinforced uniform, flexible sheet made from Ethylene Propylene Diene Monomer, ASTM D 4637, Type I. Basis of design: JM EPDM NR or approved equal.

1. Thickness: 90 mils (2.2 mm)
2. Exposed Face Color: Black

2.2 AUXILIARY ROOFING MATERIALS

A. General: Auxiliary materials recommended by roofing system manufacturer for intended use and compatible with membrane roofing.

1. Liquid-type auxiliary materials shall meet VOC limits of authorities having jurisdiction.

B. Sheet Flashing: Manufacturer's internally reinforced or scrim reinforced. Basis of design: JM EPDM Peel & Stick Flashing

C. Primer Material: Manufacturer's standard synthetic-rubber polymer primer. Basis of design: JM EPDM Tape Primer Plus (Low VOC)

D. Liquid Applied Flashing: Manufacturer's single ply liquid and fabric reinforced flashing system created with a fleece polyester scrim and a two-component polyurethane-based liquid applied flashing material, consisting of a liquid resin and a curing agent. Basis of design: JM SP Liquid Flashing Resin, JM SP Liquid Scrim

E. Liquid Applied Flashing Primer: Manufacturer's single ply liquid flashing primer. Basis of design: JM Liquid Applied Flashing Primers

F. Seaming Material: Manufacturer's standard 3-inch (76.2 mm) wide minimum, butyl splice tape with release film. Basis of design: JM EPDM Seam Tape Plus

G. Sealing Strip: Manufacturer's standard minimum per manufacturer written instructions, 45 mil (1.14 mm) thick minimum cured EPDM with factory-laminated, self-adhering seam tape. Basis of design: JM EPDM Peel & Stick Sealing Strip

H. Bonding Adhesive: Manufacturer's standard solvent-based bonding adhesive for membrane. Basis of design: JM LVOC Membrane Adhesive

1. Serviceable Installation Ambient Air Temperature: 25°F and rising.

I. Flashing Adhesive: Manufacturer's standard solvent-based bonding adhesive for base flashings. Basis of design: JM LVOC Membrane Adhesive

1. Serviceable Installation Ambient Air Temperature: 25°F and rising.

J. Slip Sheet: Manufacturer's recommended slip sheet, of type required for application.

K. Metal Termination Bars: Manufacturer's standard predrilled stainless-steel or aluminum bars, with anchors. Basis of design: JM Termination Systems

L. Membrane Battens: Manufacturer's standard polymer or aluminum-zinc-alloy-coated steel sheet, pre-punched. Basis of design: JM Membrane Battens

M. Fasteners: Factory-coated steel fasteners and metal plates meeting corrosion-resistance provisions in FMG 4470, designed for fastening membrane to substrate, and acceptable to membrane roofing system manufacturer. Basis of design: JM High Load Fasteners (#15)

N. Miscellaneous Accessories: Provide all accessories to meet the roofing manufacturer's guarantee requirements.

2.3 WALKWAYS

A. Flexible Walkways: Factory-formed, nonporous, heavy-duty, slip-resisting, surface-textured walkway pads sourced from membrane roofing system manufacturer. Basis of design: JM EPDM Peel & Stick Walkpads

2.4 COVER BOARD

A. High-Density Polyisocyanurate: ASTM C 1289, Type II, Class 4, Grade 1, High-density Polyisocyanurate technology bonded in-line to inorganic coated glass facers with greater than 80 lbs. of compressive strength. Basis of design: ProtectoR HD

1. Thickness: 1/2 inch (13 mm)
2. R-value: 2.5

2.5 ROOF INSULATION

A. General: Preformed roof insulation boards that comply with requirements and referenced standards, selected from manufacturer's standard sizes and thicknesses indicated.

B. Polyisocyanurate Board Insulation: ASTM C 1289, Type II, Class 1, Grade 2 (20 psi) Basis of design: JM ENRGY 3®

1. Minimum Long-Term Thermal Resistance (LTTR): 5.7 per inch.

a. Determined in accordance with CAN/ULC S770 at 75ºF (24ºC)

2. For new roof construction, provide (2) layers of 3” polyisocyanurate insulation on new metal deck.

2.6 TAPERED INSULATION

A. Tapered Insulation: ASTM C 1289, Type II, Class 1, Grade 2 (20 psi), provide factory-tapered insulation boards with slopes as indicated on drawing. Basis of design: JM Tapered ENRGY 3®

2.7 INSULATION ACCESSORIES

A. General: Roof insulation accessories recommended by insulation manufacturer for intended use and compatible with membrane roofing.

B. Provide saddles, crickets, tapered edge strips, and other insulation shapes where indicated for sloping to drain. Fabricate to slopes indicated.

C. Fasteners (metal deck areas): Factory-coated steel fasteners and metal or plastic plates meeting corrosion-resistance provisions in FMG 4470, designed for fastening roof insulation to substrate, and furnished by roofing system manufacturer. Basis of Design: UltraFast Fasteners and Plates

D. Urethane Adhesive (concrete deck areas): Manufacturer’s two component polyurethane adhesive formulated to adhere insulation to substrate. Basis of design: JM Two-Part Urethane Insulation Adhesive (UIA)

E. Wood Nailer Strips: Comply with manufacturer requirements.

2.8 EDGE METAL COMPONENTS

A. Coping System: Manufacturer’s factory fabricated coping consisting of a base piece and a snap-on cap. Provide product manufactured and marketed by single-source membrane supplier that is included in the No Dollar Limit guarantee. Basis of design: Presto-Lock Coping

1. Material/Gauge: .050 Kynar aluminum.

B. Fascia System: Manufacturer’s factory fabricated fascia consisting of a base piece and a snap-on cover. Provide product manufactured and marketed by single-source membrane supplier that is included in the No Dollar Limit guarantee. Basis of Design: Presto-Tite Fascia

1. Material/Gauge: .050 Kynar aluminum.

PART 3 - EXECUTION

3.1 EXAMINATION

A. General:

1. Verify that roof openings and penetrations are in place and set and braced and that roof drains are securely clamped in place.
2. Verify that wood blocking, curbs, and nailers are securely anchored to roof deck at penetrations and terminations and that nailers match thicknesses of insulation.

B. Steel Decks

1. Verify that surface plane flatness and fastening of steel roof deck complies with code and manufacturer requirements.

C. Concrete Decks:

1. Verify that concrete curing compounds that will impair adhesion of roofing components to roof deck have been removed if applicable.
2. Verify that concrete substrate is visibly dry and free of moisture.

D. Ensure general rigidity and proper slope for drainage.

E. Verify that deck is securely fastened with no projecting fasteners and with no adjacent units more than 1/16 inch (1.6 mm) out of plane relative to adjoining deck.

F. Unacceptable panels should be brought to the attention of the General Contractor and Project Owner's Representative and shall be corrected prior to installation of roofing system.

3.2 RE-COVER PREPARATION

A. Prepare existing roof according to roofing system manufacturer's written instructions, applicable recommendations of the roofing manufacturer, and requirements in this Section.

B. Disable existing roof membrane per manufacturer’s written instruction.

C. Remove and replace wet, deteriorated, or damaged roof insulation and decking as identified in moisture survey.

D. Tear out all base flashings, counterflashings, pitch pans, pipe flashings, vents, sumps and like components necessary for application of new membrane.

E. Remove abandoned equipment curbs, skylights, smoke hatches, and penetrations.

1. Install decking to match existing as directed by Owner's Representative.

F. Raise (disconnect by licensed craftsmen, if necessary) all HVAC units and other equipment supported by curbs to conform with the following:

1. Modify curbs as required to provide a minimum 8" base flashing height measured from the surface of the new membrane to the top of the flashing membrane.

2. Secure flashing and install new metal counterflashing prior to re-installation of unit.

3. Perimeter nailers shall be elevated to match the elevation of new roof insulation.

G. Immediately remove all debris from roof surface. The demolished roof system may not be stored on the roof surface.

3.3 INSULATION INSTALLATION

A. Coordinate installation of roof system components so insulation and cover board are not exposed to precipitation or left exposed at the end of the workday.

B. Comply with roofing system manufacturer's written instructions for installation of roof insulation.

C. Install tapered insulation under area of roofing to conform to slopes indicated.

D. Install insulation boards with long joints in a continuous straight line. Joints should be staggered between rows, abutting edges and ends per manufacturer's written instructions. Fill gaps exceeding 1/4 inch (6.35 mm) with like material.

E. Install 2 or more layers with joints of each succeeding layer staggered from joints of previous layer a minimum of 6 inches (152.4 mm) in each direction.

F. Trim surface of insulation boards where necessary at roof drains so completed surface is flush and does not restrict flow of water.

G. If required, install tapered edge strips at perimeter edges of roof that do not terminate at vertical surfaces.

3.4 COVER BOARD INSTALLATION

A. Coordinate installing membrane roofing system components so cover board is not exposed to precipitation or left exposed at the end of the workday.

B. Comply with membrane roofing system manufacturer's written instructions for installing roof cover board.

C. Install cover board with long joints in a continuous straight line. Joints should be staggered between rows, abutting edges and ends per manufacturer’s written instructions. Fill gaps exceeding 1/4 inch (6 mm) with cover board.

1. Cut and fit cover board within 1/4 inch (6 mm) of nailers, projections, and penetrations.

D. Trim surface of cover board where necessary at roof drains so completed surface is flush and does not restrict flow of water.

1. Install tapered edge strips at perimeter edges of roof that do not terminate at vertical surfaces.

E. Mechanically Fastened Cover Board (metal deck areas): Install cover board and secure to deck using mechanical fasteners designed and sized for fastening specified cover board to deck type.

1. Fasten to resist uplift pressure at corners, perimeter, and field of roof.

a. Fasten at a rate of 11 fasteners per 4’x8’ board in Field Prime, Field, Perimeter, and Corners.

F. Adhered Cover Board (concrete deck areas): Adhere cover board to substrate as follows:

1. Install in a two-part urethane adhesive according to roofing system manufacturer’s instruction.
2. Install to resist uplift pressure at corners, perimeter, and field of roof.
3. Bead spacing per 4’x4’ board:

a. 12” o.c. in Field Prime, Field, Perimeter, and Corners.

3.5 ROOFING MEMBRANE INSTALLATION, GENERAL

A. Install roofing membrane in accordance with roofing system manufacturer's written instructions, applicable recommendations of the roofing manufacturer and requirements in this Section.

B. Where roof slope exceeds 1/2 inch per 12 inches (1:24), contact the membrane manufacturer for installation instructions regarding installation direction.

C. Cooperate with testing and inspecting agencies engaged or required to perform services for installing roofing system.

D. Coordinate installing roofing system so insulation and other components of the roofing membrane system not permanently exposed are not subjected to precipitation or left uncovered at the end of the workday or when rain is imminent.

1. Provide tie-offs at end of each day's work to cover exposed roofing membrane sheets and insulation.
2. Complete terminations and base flashings and provide temporary seals to prevent water from entering completed sections of roofing system.
3. Remove and discard temporary seals before beginning work on adjoining roofing.

3.6 ADHERED ROOFING MEMBRANE INSTALLATION

A. Install roofing membrane over area to receive roofing in accordance with membrane roofing system manufacturer's written instructions.

   1. Unroll roofing membrane and allow to relax before installing.

   2. Install sheet in accordance with roofing system manufacturer's written instructions.

B. Accurately align roofing membrane and maintain uniform side and end laps of minimum dimensions required by manufacturer. Stagger end laps.

C. Bonding Adhesive: Apply solvent-based bonding adhesive to substrate and underside of roofing membrane at rate required by manufacturer. Follow all manufacturer recommendations for proper application of membrane. Do not apply bonding adhesive to splice area of roofing membrane.

D. Mechanically fasten roofing membrane securely at terminations, penetrations, and perimeter of roofing.

E. Apply roofing membrane with side laps shingled with slope of roof deck where possible.

F. Field Fabricated Seam Installation: Clean and prime both faces of splice areas, apply splice tape, and firmly roll side and end laps of overlapping roofing membranes according to manufacturer's written instructions to ensure a watertight seam installation. Apply lap sealant and seal exposed edges of roofing membrane terminations.

G. Spread sealant or mastic bead over deck drain flange at deck drains and securely seal roofing membrane in place with clamping ring.

3.7 BASE FLASHING INSTALLATION

A. Install sheet flashings and preformed flashing accessories and adhere to substrates in accordance with membrane roofing system manufacturer's written instructions.

B. Apply solvent-based bonding adhesive at required rate and allow to partially dry. Do not apply bonding adhesive to seam area of flashing.

C. Apply single ply liquid applied flashing system per manufacturer's written instructions.

D. Flash penetrations and field-formed inside and outside corners with cured or uncured sheet flashing.

E. Clean seam areas and overlap and firmly roll sheet flashings into the adhesive.

F. Terminate and seal top of sheet flashings and mechanically anchor to substrate through termination bars.

3.8 EDGE METAL INSTALLATION

A. Examine substrates and conditions under which sheet metal flashing and trim are to be installed and verify that Work may properly commence. Do not proceed with installation until unsatisfactory conditions have been corrected.

B. Provide edge details as indicated on the Drawings. Install in accordance with the membrane manufacturer's requirements and SMACNA's "Architectural Sheet Metal Manual."

C. Join individual sections in accordance with the membrane manufacturer's requirements and SMACNA's "Architectural Sheet Metal Manual."

3.9 WALKWAY INSTALLATION

A. Flexible Walkways: Install walkway products in locations indicated. Adhere walkway products to substrate with compatible adhesive according to roofing system manufacturer's written instructions.

3.10 FIELD QUALITY CONTROL

A. Owner or designated representative will provide on-site observation and inspection during installation.

B. Owner will engage a qualified testing agency to perform tests and inspections.

C. Final Roof Inspection: Arrange for roofing system manufacturer's technical representative to inspect roofing installation on completion and submit report to owner or designated representative.

D. Repair or remove and replace components of roofing system where test results or inspections indicate that they do not comply with specified requirements.

E. Additional testing and inspecting, at Contractor's expense, will be performed to determine compliance of replaced or additional work with specified requirements.

3.11 PROTECTION AND CLEANING

A. Protect roofing system from damage and wear during remainder of construction period.

B. Correct deficiencies in or remove roofing system that does not comply with requirements, repair substrates, and repair or reinstall roofing system to a condition free of damage and deterioration at time of Substantial Completion and according to warranty requirements.

C. Clean overspray and spillage from adjacent construction using cleaning agents and procedures recommended by manufacturer of affected construction.

END OF SECTION 075323

SECTION 076200 - SHEET METAL FLASHING AND TRIM

PART 1 - GENERAL

1.1 RELATED DOCUMENTS

A. Drawings and general provisions of the Contract, including General and Supplementary Conditions and Division 1 Specification Sections, apply to this Section.

1.2 SUMMARY

A. This Section includes the following:

1. Exposed trim and fascia.
2. Metal flashing.
3. Copings.
4. Roof edge fascia.
5. Scuppers.
6. Gutters and downspouts.
7. Cast iron boots.
8. Precast concrete splash blocks.

B. Related Sections include the following:

1. Division 4 Section “Unit Masonry (Assemblies)” for mockup requirements to include sheet metal flashing and trim.
2. Division 6 Section "Rough Carpentry" for wood nailers, curbs, and blocking.
3. Division 7 Section “Composite Wall Panels” for installing sheet metal flashing and trim integral with composite wall panels.
4. Division 7 Section “Standing Seam Metal Roofing” for metal roofing, flashings and trims associated with the metal roof.
5. Division 7 Section “Thermoplastic Polyolefin (TPO) Roofing” for sheet metal flashing and trim required to be used in conjunction with membrane roofing systems.
6. Division 7 Section “Joint Sealants” for elastomeric sealants to be installed in attachments, joints and penetrations of sheet metal flashing and trim.
7. Division 7 Section “Roof Accessories” for flashings required for various roof-penetrating items.
8. Division 21 Fire Protection Sections, Division 22 Plumbing Sections, Division 23 HVAC Sections and Division 26 Electrical Sections for various roof-mounted and penetrating items requiring sheet metal flashing and trim assemblies.

1.3 PERFORMANCE REQUIREMENTS

A. General: Sheet metal flashing and trim assemblies as indicated shall withstand wind loads, structural movement, thermally induced movement, and exposure to weather without failure due to defective manufacture, fabrication, installation, or other defects in construction. Completed sheet metal flashing and trim shall not rattle, leak, or loosen, and shall remain watertight.

B. Fabricate and install flashings capable of resisting design forces according to recommendations in FMG Loss Prevention Data Sheet 1-49. Manufacture and install copings and roof edge flashings tested according to ANSI\SPRI ES-1 and capable of resisting design forces.

1. Refer to Structural Drawings for wind design criteria. At a minimum, design sheet metal flashings and trim to meet a 72 mph windspeed warranty.

C. Thermal Movements: Provide sheet metal flashing and trim that allows for thermal movements from ambient and surface temperature changes. For copings and roof edge flashings, allow for thermal movements from ambient and surface temperature changes to prevent buckling, opening of joints, hole elongation, overstressing of components, failure of joint sealants, failure of connections, and other detrimental effects. Provide clips that resist rotation and avoid shear stress as a result of thermal movements.

1. Temperature Change (Range): 120 deg. F, ambient; 180 deg. F, material surfaces.

1.4 SUBMITTALS

A. Product Data: For each type of product indicated. Include construction details, material descriptions, dimensions of individual components and profiles, and finishes for each manufactured product and accessory.

B. Shop Drawings: Show fabrication and installation layouts of sheet metal flashing and trim, including plans, elevations, expansion-joint locations, and keyed details. Distinguish between shop and field-assembled work. Include the following:

1. Identification of material, thickness, weight, and finish for each item and location in Project.
2. Details for forming sheet metal flashing and trim, including profiles, shapes, seams, and dimensions.

    a. Custom formed copings and roof edge flashings will be required for curved walls.

3. Details for joining, supporting, and securing sheet metal flashing and trim, including layout of fasteners, cleats, clips, and other attachments. Include pattern of seams.
4. Details of termination points and assemblies, including fixed points.
5. Details of expansion joints and expansion-joint covers, including showing direction of expansion and contraction.
6. Details of edge conditions, including eaves, crickets, and counterflashings as applicable.
7. Details of special conditions.

8. Details of connections to adjoining work.

9. Detail formed flashing and trim at a scale of not less than 3 inches per 1 foot.
10. Details of transitions between downspouts, cast iron boots and sub-surface storm drain systems.

C. Samples for Verification: For each type of exposed finish required, prepared on Samples of size indicated below. Samples shall show the full range to be expected for each color required.

1. Sheet Metal Flashing: 12 inches long by actual width of unit, including finished seam and in required profile. Include fasteners, cleats, clips, closures, and other attachments.
2. Full scale sample thru-wall scupper box fabricated in accordance with details on Drawings.
3. Full scale sample conductor head fabricated in accordance with details on Drawings.
4. Trim, Copings, Roof Edge Flashings, Metal Closures, Joint Intersections, and Miscellaneous Fabrications: 12 inches long and in required profile. Include fasteners and other exposed accessories.
5. Accessories and Miscellaneous Materials: Full-size Sample.

D. Qualification Data: For qualified fabricator.

E. Maintenance Data: For sheet metal flashing, trim and accessories to include in maintenance manuals.

F. Warranty: Sample of special warranty.

1.5 QUALITY ASSURANCE

A. Fabricator Qualifications: Shop that employs skilled workers who custom fabricate sheet metal flashing and trim similar to that required for this Project and whose products have a record of successful in-service performance.

B. Sheet Metal Flashing and Trim Standard: Comply with SMACNA's "Architectural Sheet Metal Manual" unless more stringent requirements are specified or shown on Drawings.

C. Mockups: Build mockups to verify selections made under sample submittals and to demonstrate aesthetic effects and set quality standards for fabrication and installation. The mockups required by this Section shall be installed as components of the full-scale masonry assemblies mockup specified in Division 4 Section “Unit Masonry (Assemblies)”.

1. Build mockups of typical roof conditions, including coping assembly, scupper box and/or conductor head, fascia, fascia trim, and/or apron flashing, including supporting construction cleats, seams, fasteners, attachments and accessories.
2. Approval of mockups does not constitute approval of deviations from the Contract Documents contained in mockups unless Architect specifically approves such deviations in writing.

D. Pre-installation Conference: Conduct conference at Project site in accordance with Division 1 Section “Project Meetings”.

1. Meet with Owner, Architect, Owner's insurer if applicable, Installer, and installers whose work interfaces with or affects sheet metal flashing and trim including installers of roofing materials, roof accessories, and roof-mounted equipment.
2. Review methods and procedures related to sheet metal flashing and trim.
3. Examine substrate conditions for compliance with requirements, including flatness and attachment to structural members.
4. Review special roof details, roof drainage, roof penetrations, equipment curbs, and condition of other construction that will affect sheet metal flashing.
5. Document proceedings, including corrective measures and actions required, and furnish copy of record to each participant.

1.6 DELIVERY, STORAGE, AND HANDLING

A. Do not store sheet metal flashing and trim materials in contact with other materials that might cause staining, denting, or other surface damage. Store sheet metal flashing and trim materials away from uncured concrete and masonry.

B. Protect strippable protective covering on sheet metal flashing and trim from exposure to sunlight and high humidity, except to the extent necessary for the period of sheet metal flashing and trim installation.

1.7 WARRANTY

A. Special Warranty on Finishes: Manufacturer's standard form in which manufacturer agrees to repair finish or replace sheet metal flashing and trim that shows evidence of deterioration of factory-applied finishes within specified warranty period.

1. Exposed Finish: Deterioration includes, but is not limited to, the following:

a. Color fading more than 5 Hunter units when tested according to ASTM D2244.
b. Chalking in excess of a No. 8 rating when tested according to ASTM D4214.
c. Cracking, checking, peeling, or failure of paint to adhere to bare metal.

2. Finish Warranty Period: 20 years from date of Substantial Completion.

PART 2 - PRODUCTS

2.1 SHEET METALS

A. General: Protect mechanical and other finishes on exposed surfaces from damage by applying a strippable, temporary protective film before shipping.

B. Aluminum Sheet: ASTM B209, alloy as standard with manufacturer for finish required, with temper as required to suit forming operations and performance required.

1. Surface: Smooth, flat.
2. Exposed Finishes:

a. Two-Coat Fluoropolymer: AAMA 620. Fluoropolymer finish containing not less than 70 percent PVDF resin by weight in color coat. Prepare, pretreat, and apply coating to exposed metal surfaces to comply with coating and resin manufacturers' written instructions.

1) Color: As selected by Architect from manufacturer’s full range of available two-coat colors.

b. Concealed Finish: Pretreat with manufacturer's standard white or light-colored acrylic or polyester backer finish, consisting of prime coat and wash coat with a minimum total dry film thickness of 0.5 mil.

3. Clear Anodic Finish, Coil Coated: AAMA 611, AA-M12C22A41, Class I, 0.018 mm or thicker.
4. Color Anodic Finish, Coil Coated: AAMA 611, AA-M12C22A42/A44, Class I, 0.018 mm or thicker.

a. Color: As selected by Architect from full range of industry colors and color densities.
b. Color Range: Noticeable variations in the same piece are unacceptable. Variations in appearance of adjoining components are acceptable if they are within the range of approved Samples and are assembled or installed to minimize contrast.

C. Stainless-Steel Sheet: ASTM A240 or ASTM A666, Type 304, dead soft, fully annealed.

1. Finish: 2D dull, cold rolled (for installations not exposed to view).
2. Finish: 4 polished directional satin (for installations exposed to view).
3. Surface: Smooth, flat.

D. Metallic-Coated Steel Sheet: Restricted flatness steel sheet, metallic coated by the hot-dip process and pre-painted by the coil-coating process to comply with ASTM A755.

1. Zinc-Coated (Galvanized) Steel Sheet: ASTM A653, G90 coating designation; structural quality.
2. Surface: Smooth, flat and with manufacturer's standard clear acrylic coating on both sides.
3. Surface: Smooth, flat.
4. Exposed Finishes:

a. Two-Coat Fluoropolymer: AAMA 620. Fluoropolymer finish containing not less than 70 percent PVDF resin by weight in color coat. Prepare, pretreat, and apply coating to exposed metal surfaces to comply with coating and resin manufacturers' written instructions.

1) Color: As selected by Architect from manufacturer's full range of custom available two-coat colors.

5. Concealed Finish: Pretreat with manufacturer's standard white or light-colored acrylic or polyester backer finish, consisting of prime coat and wash coat with a minimum total dry film thickness of 0.5 mil.

2.2 MISCELLANEOUS MATERIALS

A. General: Provide materials and types of fasteners, solder, welding rods, protective coatings, separators, sealants, and other miscellaneous items as required for complete sheet metal flashing and trim installation and recommended by manufacturer of primary sheet metal unless otherwise indicated.

B. Fasteners: Wood screws, annular threaded nails, self-tapping screws, self-locking rivets and bolts, and other suitable fasteners designed to withstand design loads and recommended by manufacturer of primary sheet metal.

1. General: Blind fasteners or self-drilling screws, gasketed, with hex-washer head.

   a. Exposed Fasteners: Heads matching color of sheet metal using plastic caps or factory-applied coating.
   b. Blind Fasteners: High-strength aluminum or stainless-steel rivets suitable for metal being fastened.

2. Fasteners for Aluminum Sheet: Aluminum or Series 300 stainless steel.
3. Fasteners for Stainless-Steel Sheet: Series 300 stainless steel.
4. Fasteners for Zinc-Coated (Galvanized) Steel Sheet: Hot-dip galvanized steel according to ASTM A153 or ASTM F2329 or Series 300 stainless steel.

C. Solder:

1. For Stainless Steel: ASTM B32, Grade Sn60, with an acid flux of type recommended by stainless-steel sheet manufacturer.
2. For Zinc-Coated (Galvanized) Steel: ASTM B32, Grade Sn50, 50 percent tin and 50 percent lead or Grade Sn60, 60 percent tin and 40 percent lead.

D. Sealant Tape: Pressure-sensitive, 100 percent solids, gray polyisobutylene compound sealant tape with release-paper backing. Provide permanently elastic, non-sag, nontoxic, non-staining tape 1/2 inch wide and 1/8 inch thick.

E. Elastomeric Sealant: ASTM C920, elastomeric polyurethane polymer sealant; low modulus; of type, grade, class, and use classifications required to seal joints in sheet metal flashing and trim and remain watertight.

F. Butyl Sealant: ASTM C1311, single-component, solvent-release butyl rubber sealant; polyisobutylene plasticized; heavy bodied for hooked-type expansion joints with limited movement.

G. Epoxy Seam Sealer: Two-part, noncorrosive, aluminum seam-cementing compound, recommended by manufacturer for exterior nonmoving joints, including riveted joints.

H. Bituminous Coating: Cold-applied asphalt emulsion complying with ASTM D1187.

I. Self-Adhering, High-Temperature Sheet: Minimum 30 mils thick, consisting of a slip-resistant polyethylene or polypropylene film top surface laminated to a layer of butyl or SBS-modified

asphalt adhesive, with release-paper backing. Provide primer in accordance with underlayment manufacturer's written instructions.

1. Manufacturers: Subject to compliance with requirements, available manufacturers offering products that may be incorporated into the Work include, but are not limited to the following:

    a. Carlisle WIP Products; a brand of Carlisle Construction Materials.
    b. Henry Company.
    c. Owens Corning.
    d. SDP Advanced Polymer Products Inc.

J. Felt: ASTM D226, Type II (No. 30), asphalt-saturated organic felt; non-perforated.

K. Asphalt Roofing Cement: ASTM D4586, asbestos free, of consistency required for application.

2.3 FABRICATION, GENERAL

A. General: Custom fabricate sheet metal flashing and trim to comply with recommendations in SMACNA's "Architectural Sheet Metal Manual" that apply to design, dimensions, geometry, metal thickness, and other characteristics of item indicated. Fabricate items at the shop to the greatest extent possible.

1. Fabricate sheet metal flashing and trim in thickness or weight needed to comply with performance requirements, but not less than that specified for each application and metal.
2. Obtain field measurements for accurate fit before shop fabrication.
3. Form sheet metal flashing and trim without excessive oil canning, buckling, and tool marks and true to line and levels indicated, with exposed edges folded back to form hems.
4. Conceal fasteners and expansion provisions where possible. Exposed fasteners are not allowed on faces exposed to view.

B. On-Site Fabrication: Subject to compliance with specified requirements, sheet metal flashing and trim components, with the exception of copings, may be fabricated on-site or shop-fabricated using UL-certified roll-forming equipment if sheet metal flashing and trim components are of same profile and warranted by manufacturer to be equal to factory-formed components. Fabricate according to equipment manufacturer's written instructions and to comply with details shown.

C. Fabrication Tolerances: Fabricate sheet metal flashing and trim that is capable of installation to tolerances of 1/4 inch in 20 feet on slope and location lines as indicated, and within 1/8-inch offset of adjoining faces and of alignment of matching profiles.

D. Sealed Joints: Form non-expansion but movable joints in metal to accommodate elastomeric sealant.

E. Expansion Provisions: Where lapped expansion provisions cannot be used, form expansion joints of intermeshing hooked flanges, not less than 1-inch deep, filled with butyl sealant concealed within joints.

F. Fabricate cleats and attachment devices from same material as accessory being anchored or from compatible, non-corrosive metal.

G. Fabricate cleats and attachment devices of sizes as recommended by SMACNA's "Architectural Sheet Metal Manual" and by FMG Loss Prevention Data Sheet 1-49 for application, but not less than thickness of metal being secured.

H. Seams: Fabricate nonmoving seams with flat-lock seams. Form seams and seal with elastomeric sealant unless otherwise recommended by sealant manufacturer for intended use.

I. Seams for Aluminum: Fabricate nonmoving seams with flat-lock seams. Form seams and seal with epoxy seam sealer.

J. Do not use graphite pencils to mark metal surfaces.

2.4 MANUFACTURERS

A. Subject to compliance with requirements, available manufacturers offering products that may be incorporated into the Work include, but are not limited to, the following:

1. Carlisle Syntec Systems.
2. ATAS International, Inc.
3. Cheney Flashing Company.
4. Hickman Company, W. P., an OMG, Inc. company.
5. Johns Manville.
6. Metal-Era, Inc.
7. Petersen Aluminum Corporation, a Carlisle company.
8. Una-Clad; Firestone Building Products.

2.5 COPINGS

A. Copings: Fabricate in minimum 96 inch-long, but not exceeding 12 foot-long, sections. Fabricate joint plates of same thickness as copings. Furnish with continuous cleats to anchor the exterior leg.

1. Coping Profile: As indicated on Drawings.
2. Joint Style: Butted with expansion space and 6 inch-wide, exposed cover plate.
3. Coping Material: Aluminum, 0.050 inch thick.
4. Finish: Provide powder coated finish on one piece face frame. Color as selected by Architect from full range of RAL color numbers. Project includes two colors for the building. Existing building, receiving dock addition and two story classroom addition shall be anodized aluminum Metal type “B”. Front addition, including administration, music,

main lobby, art and media center shall be red selected from full range of RAL colors to match metal panel type “A”.

5. Corners: Shop or factory-mitered ONLY.
6. Special Fabrications: Radiused Sections.

2.6 ROOF-EDGE FASCIAS

A. Roof-Edge Fascia and Gravel Stop: Fabricate in minimum 96 inch-long, but not exceeding 12 foot-long sections. Fabricate joint plates of same thickness as copings. Furnish with continuous cleats to anchor the exterior leg.

1. Fascia Profile: As indicated on Drawings.
2. Joint Style: Butted with expansion space and 6 inch-wide, exposed cover plate.
3. Fascia Material: Aluminum, 0.050 inch thick.
4. Finish: Provide powder coated finish on one piece face frame. Color as selected by Architect from full range of RAL color numbers. Project includes two colors for the building. Existing building, receiving dock addition and two story classroom addition shall be anodized aluminum Metal type “B”. Front addition, including administration, music, main lobby, art and media center shall be red selected from full range of RAL colors to match metal panel type “A”.
5. Corners: Shop or factory-mitered ONLY.
6. Special Fabrications: Radiused Sections.

2.7 MISCELLANEOUS LOW-SLOPE ROOF SHEET METAL FABRICATIONS

A. Counterflashing: Fabricate from aluminum, 0.032 inch thick.

B. Roof-Penetration Flashing: Fabricate from one of the following materials:

1. Copper: 16 oz./sq. ft.
2. Stainless Steel: 0.019 inch thick.

2.8 ROOF DRAINAGE SHEET METAL FABRICATIONS

A. Parapet Scuppers: Fabricate one-piece welded scuppers to dimensions and details indicated on Drawings. Provide a 1-1/2-inch wide, one-piece picture frame trim at the exterior face of the building.

1. Scupper Material: Fabricated from 16 Ga. stainless steel as detailed.
2. Face Frame Material: One piece face frame fabricated from 16 Ga. stainless steel.

    a. Color: Provide powder coated finish on one piece face frame. Color as selected by Architect from full range of RAL color numbers. Project includes two colors for the building. Existing building, receiving dock addition and two story classroom addition shall be anodized aluminum Metal type “B”. Front addition, including

administration, music, main lobby, art and media center shall be red selected from full range of RAL colors to match metal panel type “A”.

B. Conductor Heads: Fabricate conductor heads with flanged back and stiffened top edge and of dimensions and shape indicated on Drawings, complete with outlet tubes. Separate dissimilar metals where conductor heads come into contact with scupper boxes Fabricate from the following material:

1. Aluminum: 0.050 inch thick, Class 1 clear anodic finish.
2. Metallic-Coated Steel Sheet: 18 Ga. steel sheet.

C. Gutters: Fabricate to cross section required, complete with end pieces, outlet tubes, and other accessories as required. Fabricate in minimum 96-inch-long sections. Furnish flat-stock gutter brackets and flat-stock gutter spacers and straps fabricated from same metal as gutters, of size recommended by cited sheet metal standard but with thickness not less than twice the gutter thickness. Fabricate expansion joints, expansion-joint covers, gutter bead reinforcing bars, and gutter accessories from same metal as gutters. Shop-fabricate interior and exterior corners.

1. Gutter Profile: Style A, according to cited sheet metal standard. Expansion Joints: Lap type or built in.
2. Accessories: Wire-ball downspout strainer; valley baffles, where applicable. Provide outlet tubes, end caps and other special pieces as required.
3. Material: Aluminum, 0.050 inch thick, Class 1 clear anodic finish. Metallic-Coated Steel Sheet: 18 Ga. steel sheet.

D. Downspouts: Fabricate rectangular downspouts to dimensions indicated, complete with shop-fabricated, mitered elbows. Furnish with metal hangers from same material as downspouts and anchors.

1. Fabricated Hanger Style: Fig 1-35A, according to SMACNA's "Architectural Sheet Metal Manual." Material: Aluminum, 0.050 inch thick, Class 1 clear anodic finish.
2. Metallic-Coated Steel Sheet: 18 Ga. steel sheet.

2.9 CAST IRON BOOTS

A. Cast Iron Boots: Prefinished, gray iron castings complying with ASTM A48, contoured interior flow design with no boxed corners, weld seams or choke points. Include integral lug slots and side wall cleanout. Provide flexible rubber adaptor for connection to drainage pipe.

B. Basis of Design Products: J.R. Hoe & Sons, Middlesboro, KY www.downspoutboots.com.

1. Material: Cast iron.
2. Length: Minimum 28 inches with integral side wall cleanout.
3. Shape: Rectangular.
4. Offset Configuration: As required.
5. Opening Size: As required to receive downspout.
6. Finish: Powder coat. Color to be selected from manufacturer’s full range of available colors.

2.10 PRECAST CONCRETE SPLASH BLOCKS

A. Precast Concrete Splash Blocks: Precast concrete splash blocks with 3/16 inch radiused corners and 1/16-inch eased edges designed to channel water away from the base of the building.

B. Basis of Design Products: Modern Precast www.modernprecast.com.

1. Material: Concrete.
2. Length: 36 inches.
3. Width: 18 inches.
4. Thickness: 3-7/8 inches
5. Shape: Rectangular trough.
6. Color: Standard gray.

2.11 GENERAL FINISH REQUIREMENTS

A. Comply with NAAMM's "Metal Finishes Manual for Architectural and Metal Products" for recommendations for applying and designating finishes.

B. Protect mechanical and painted finishes on exposed surfaces from damage by applying a strippable, temporary protective covering before shipping.

C. Appearance of Finished Work: Noticeable variations in same piece are not acceptable. Variations in appearance of adjoining components are acceptable if they are within the range of approved Samples and are assembled or installed to minimize contrast.

PART 3 - EXECUTION

3.1 EXAMINATION

A. Examine substrates, areas, and conditions, with Installer present, to verify actual locations, dimensions and other conditions affecting performance of the Work.

1. Verify compliance with requirements for installation tolerances of substrates.
2. Verify that substrate is sound, dry, smooth, clean, sloped for drainage, and securely anchored.
3. Verify that air or water-resistant barriers have been installed over sheathing or backing substrate to prevent air infiltration or water penetration.

B. Examine walls, roof edges and parapets for suitable conditions.

C. Proceed with installation only after unsatisfactory conditions have been corrected.

3.2 INSTALLATION, GENERAL

A. General: Anchor sheet metal flashing and trim and other components of the Work securely in place, with provisions for thermal and structural movement. Use fasteners, solder, welding rods, protective coatings, separators, sealants, and other miscellaneous items as required to complete roof specialty and sheet metal flashing and trim systems.

1. Install roof specialties and sheet metal flashing and trim level, plumb and true to line and elevation with limited oil-canning. Provide uniform, neat seams with minimum exposure of solder, welds, and sealant.
2. Install sheet metal flashing and trim to fit substrates and to result in watertight performance. Verify shapes and dimensions of surfaces to be covered before fabricating sheet metal.
3. Space cleats for securing sheet metal not more than 12 inches apart. Anchor each cleat with two fasteners. Bend tabs over fasteners.
4. Install exposed sheet metal flashing and trim without excessive oil canning, buckling, and tool marks.
5. Install sealant tape where indicated.
6. Torch cutting of sheet metal flashing and trim is not permitted.
7. Do not use graphite pencils to mark metal surfaces.

B. Metal Protection: Where dissimilar metals will contact each other, or where metals contact corrosive substrates such as pressure treated wood or cementitious construction, protect against galvanic action by one of the following methods:

1. Paint contact surfaces with bituminous coating or by other permanent separation coating as recommended by SMACNA.
2. Separate contact surfaces with felt (No. 30).
3. Separate contact surfaces with self-adhering sheet.

C. Expansion Provisions: Provide for thermal expansion of exposed flashing and trim. Space movement joints at a maximum of 10 feet with no joints allowed within 24 inches of a corner or intersection. Where lapped expansion provisions cannot be used or would not be sufficiently watertight, form expansion joints of intermeshing hooked flanges, not less than 1 inch deep, filled with sealant concealed within joints.

D. Fastener Sizes: Use fasteners of sizes that will penetrate wood sheathing not less than 1-1/4 inches for nails and not less than 3/4-inch for wood screws and metal decking not less than recommended by fastener manufacturer to achieve maximum pull-out resistance.

E. Soldered Joints: Clean surfaces to be soldered, removing oils and foreign matter. Pre-tin edges of sheets to be soldered to a width of 1-1/2 inches, except reduce pre-tinning where pre-tinned surface would show in completed Work.

1. Do not solder aluminum sheet.
2. Do not use torches for soldering. Heat surfaces to receive solder and flow solder into joint. Fill joint completely. Completely remove flux and spatter from exposed surfaces.
3. Stainless-Steel Soldering: Tin edges of uncoated sheets using solder recommended for stainless steel and acid flux. Promptly remove acid flux residue from metal after tinning

and soldering. Comply with solder manufacturer's recommended methods for cleaning and neutralization.

F. Rivets: Rivet joints in uncoated aluminum where indicated or where necessary for strength.

3.3 ROOF DRAINAGE SYSTEM INSTALLATION

A. General: Install sheet metal roof drainage items to produce complete roof drainage system according to SMACNA standards, and as detailed on Drawings. Coordinate installation of roof perimeter flashing with installation of roof drainage system.

B. Parapet Scuppers: Install scuppers where indicated. Continuously support scupper, set to correct elevation, and seal flanges to interior wall face in accordance with roofing manufacturer’s acceptable standards and details, and to achieve roofing manufacturer’s warranty.

1. Install scuppers as detailed on Drawings.
2. Anchor scupper face trim to exterior wall and seal with elastomeric sealant. Refer to details on Drawings.
3. Flash and seal scupper into adjacent roof to form a complete, watertight installation.

3.4 ROOF FLASHING INSTALLATION

A. General: Install sheet metal flashing and trim to comply with performance requirements, sheet metal manufacturer's written installation instructions, and cited sheet metal standards. Provide concealed fasteners where possible, and set units true to line, levels, and slopes. Install work with laps, joints, and seams that are permanently watertight and weather resistant.

B. Copings: Anchor to resist uplift and outward forces according to recommendations in FM Global Property Loss Prevention Data Sheet 1-49 for specified FM Approvals' listing for required windstorm classification. Refer to details on Drawings.

1. Install copings in accordance with ANSI/SPRI/FM 4435/ES-1.
2. Interlock exterior bottom edge of coping with continuous cleat anchored to substrate at 24 inch centers.
3. Anchor interior leg of coping with washers and screw fasteners through slotted holes at 24 inch centers.
4. All joints shall be weathertight.

C. Roof Edge Fascias: Anchor to resist uplift and outward forces according to recommendations in FM Global Property Loss Prevention Data Sheet 1-49 for FM Approvals' listing for required windstorm classification. Refer to details on Drawings.

1. Install roof edge fascias in accordance with ANSI/SPRI/FM 4435/ES-1.
2. Interlock exterior bottom edge of roof edge fascia with continuous cleat anchored to substrate at 24 inch centers.
3. All joints shall be weathertight.

D. Pipe or Post Counterflashing: Install counterflashing umbrella with close-fitting collar with top edge flared for elastomeric sealant, extending a minimum of 4 inches over base flashing. Install stainless-steel draw band and tighten.

E. Roof-Penetration Flashing: Coordinate installation of roof-penetration flashing with installation of roofing and other items penetrating roof. Seal with elastomeric or butyl sealant and clamp flashing to pipes that penetrate roof.

3.5 WALL FLASHING INSTALLATION

A. General: Install sheet metal wall flashing to intercept and exclude penetrating moisture according to cited sheet metal standards unless otherwise indicated. Coordinate installation of wall flashing with installation of wall-opening components such as windows, doors, and louvers.

B. Through-Wall Flashing: Installation of through-wall flashing is specified in Division 4 Section "Unit Masonry (Assemblies)".

3.6 ERECTION TOLERANCES

A. Installation Tolerances: Shim and align sheet metal flashing and trim within installed tolerance of 1/4-inch in 20 feet on slope and location lines as indicated, and within 1/8 inch offset of adjoining faces and of alignment of matching profiles.

3.7 CLEANING AND PROTECTION

A. Clean exposed metal surfaces of substances that interfere with uniform oxidation and weathering.

B. Clean and neutralize flux materials. Clean off excess solder.

C. Clean off excess sealants.

D. Remove temporary protective coverings and strippable films as sheet metal flashing and trim are installed unless otherwise indicated in manufacturer's written installation instructions. On completion of installation, remove unused materials and clean finished surfaces. Maintain in a clean condition during construction.

E. Replace sheet metal flashing and trims that have been damaged or that have deteriorated beyond successful repair by finish touchup or similar minor repair procedures.

END OF SECTION 076200

SECTION 077200 - ROOF ACCESSORIES

PART 1 - GENERAL

1.1 RELATED DOCUMENTS

A. Drawings and general provisions of the Contract, including General and Supplementary Conditions and Division 01 Specification Sections, apply to this Section.

1.2 SUMMARY

A. Section Includes:

1. Roof hatches.

B. Roof hatches and smoke vents shall be provided by the General Contractor, complete with new curbs and any supplemental framing and wood blocking that may be required. The integral curbs shall be flashed by the roofing Installer. Wiring for smoke vents shall be performed by the Electrical Contractor.

C. Related Sections:

1. Division 7 Section "Sheet Metal Flashing and Trim" for shop- and field-formed metal flashing, roof-drainage systems, roof expansion-joint covers, and miscellaneous sheet metal trim and accessories.
2. Division 8 Section “Tubular Daylighting Devices” for roof penetrations and flashings required for tubular daylighting assemblies.
3. Division 28 Electrical Sections for interconnects to automatically operated heat and smoke vents.

1.3 PERFORMANCE REQUIREMENTS

A. General Performance: Roof accessories shall withstand exposure to weather and resist thermally-induced movement without failure, rattling, leaking, or fastener disengagement due to defective manufacture, fabrication, installation, or other defects in construction.

1.4 ACTION SUBMITTALS

A. Product Data: For each type of roof accessory indicated. Include construction details, material descriptions, dimensions of individual components and profiles, and finishes.

B. Shop Drawings: For roof accessories. Include plans, elevations, keyed details, and attachments to other work. Indicate dimensions, loadings, and special conditions. Distinguish between plant- and field-assembled work.

1.5 INFORMATIONAL SUBMITTALS

A. Coordination Drawings: Roof plans, drawn to scale, and coordinating penetrations and roof-mounted items. Show the following:

1. Size and location of roof accessories specified in this Section.
2. Method of attaching roof accessories to roof or building structure.
3. Other roof-mounted or roof structure-mounted items, including mechanical and electrical equipment, ductwork, piping, and conduit.
4. Required clearances.
5. Confirmation that the Contractor has field-verified the sizes of any existing roof hatches required to be replaced within the existing openings, if indicated.

B. Warranty: Sample of special warranty.

1.6 CLOSEOUT SUBMITTALS

A. Operation and Maintenance Data: For roof accessories to include in operation and maintenance manuals.

1.7 COORDINATION

A. Coordinate layout and installation of roof accessories with roofing membrane and base flashing and interfacing and adjoining construction to provide a leakproof, weathertight, secure, and noncorrosive installation.

B. Coordinate dimensions with rough-in information or Shop Drawings of equipment to be supported or installed.

PART 2 - PRODUCTS

2.1 ROOF HATCHES

A. Roof Hatches: Metal roof-hatch units with lids and insulated, double-walled curbs, welded or mechanically fastened and sealed corner joints, continuous lid-to-curb counterflashing and weathertight perimeter gasketing, and integrally formed deck-mounting flange at perimeter bottom.

1. Manufacturers: Subject to compliance with requirements, available manufacturers offering products that may be incorporated into the Work include, but are not limited to, the following:

a. Babcock-Davis.
b. Bilco Company (The).
c. J. L. Industries, Inc. ; a division of the Activar Products Group.

d. Milcor Inc.; Commercial Products Group of Hart & Cooley, Inc.
e. Nystrom.

B. Type and Size: Single-leaf lid. Sizes as indicated on the Drawings. If replacing existing roof hatches, the Contractor shall field-verify and match the sizes.

C. Loads: Minimum 40-lbf/sq. ft. external live load and 20-lbf/sq. ft. internal uplift load.

D. Hatch Material: Aluminum sheet, 0.090 inch thick; mill finish.

E. Construction:

1. Insulation: Cellulosic-fiber, Glass-fiber, or Polyisocyanurate board; R-Value of 12.0 or higher, according to ASTM C 1363.
2. Hatch Lid: Opaque, insulated, and double walled, with manufacturer's standard metal liner of same material and finish as outer metal lid.
3. Curb Liner: Manufacturer's standard, of same material and finish as metal curb.
4. Fabricate curbs to minimum height of 12 inches unless otherwise indicated.

F. Hardware: Stainless-steel spring latch with turn handles, butt- or pintle-type hinge system, and padlock hasps inside and outside.

1. Provide two-point latch on lids larger than 84 inches.

G. Ladder-Assist Post: Roof-hatch manufacturer's standard device for attachment to roof-access ladder.

1. Operation: Post locks in place on full extension; release mechanism returns post to closed position.
2. Height: 42 inches above finished roof deck.
3. Material: Steel tube or aluminum.
4. Post: 1-5/8-inch-diameter pipe.
5. Finish: Manufacturer's standard baked enamel or powder coat; safety yellow color.

2.2 METAL MATERIALS

A. Aluminum Sheet: ASTM B 209, manufacturer's standard alloy for finish required, with temper to suit forming operations and performance required.

1. Mill Finish: As manufactured.

B. Aluminum Extrusions and Tubes: ASTM B 221, manufacturer's standard alloy and temper for type of use, finished to match assembly where used; otherwise mill finished.

C. Stainless-Steel Sheet and Shapes: ASTM A 240 or ASTM A 666, Type 304.

D. Steel Shapes: ASTM A 36, hot-dip galvanized according to ASTM A 123 unless otherwise indicated.

E. Steel Tube: ASTM A 500, round tube.

F. Galvanized-Steel Tube: ASTM A 500, round tube, hot-dip galvanized according to ASTM A 123.

G. Steel Pipe: ASTM A 53, galvanized.

2.3 MISCELLANEOUS MATERIALS

A. General: Provide materials and types of fasteners, protective coatings, sealants, and other miscellaneous items required by manufacturer for a complete installation.

B. Cellulosic-Fiber Board Insulation: ASTM C 208, Type II, Grade 1, thickness as indicated.

C. Glass-Fiber Board Insulation: ASTM C 726, nominal density of 3 lb/cu. ft., thermal resistivity of 4.3 deg F x h x sq. ft./Btu x in. at 75 deg F, thickness as indicated.

D. Polyisocyanurate Board Insulation: ASTM C 1289, thickness and thermal resistivity as indicated.

E. Wood Nailers: Softwood lumber, pressure treated with waterborne preservatives for aboveground use, acceptable to authorities having jurisdiction, containing no arsenic or chromium, and complying with AWPA C2; not less than 1-1/2 inches thick.

F. Security Grilles: 3/4-inch diameter, ASTM A 1011 steel bars spaced 6 inches o.c. in one direction and 12 inches o.c. in the other; factory finished as follows:

1. Surface Preparation: Remove mill scale and rust, if any, from uncoated steel, complying with SSPC-SP 5/NACE No. 1, "White Metal Blast Cleaning," or SSPC-SP 8, "Pickling."
2. Factory Priming for Field-Painted Finish: Apply shop primer specified below immediately after surface preparation and pretreatment.
3. Shop Primer: Manufacturer's or fabricator's standard, fast-curing, lead- and chromate-free, universal primer; selected for resistance to normal atmospheric corrosion, for compatibility with substrate and field-applied finish paint system indicated, and for capability to provide a sound foundation for field-applied topcoats under prolonged exposure.

G. Bituminous Coating: Cold-applied asphalt emulsion complying with ASTM D 1187.

H. Gaskets: Manufacturer's standard tubular or fingered design of neoprene, EPDM, PVC, or silicone or a flat design of foam rubber, sponge neoprene, or cork.

I. Elastomeric Sealant: ASTM C 920, elastomeric polyurethane or silicone polymer sealant as recommended by roof accessory manufacturer for installation indicated; low modulus; of type, grade, class, and use classifications required to seal joints and remain watertight.

J. Butyl Sealant: ASTM C 1311, single-component, solvent-release butyl rubber sealant; polyisobutylene plasticized; heavy bodied for expansion joints with limited movement.

2.4 GENERAL FINISH REQUIREMENTS

A. Comply with NAAMM's "Metal Finishes Manual for Architectural and Metal Products" for recommendations for applying and designating finishes.

B. Appearance of Finished Work: Noticeable variations in same piece are not acceptable. Variations in appearance of adjoining components are acceptable if they are within the range of approved Samples and are assembled or installed to minimize contrast.

PART 3 - EXECUTION

3.1 EXAMINATION

A. Examine substrates, areas, and conditions, with Installer present, to verify actual locations, dimensions, and other conditions affecting performance of the Work.

B. Verify that substrate is sound, dry, smooth, clean, sloped for drainage, and securely anchored.

C. Verify dimensions of roof openings for roof accessories.

D. Proceed with installation only after unsatisfactory conditions have been corrected.

3.2 INSTALLATION

A. General: Install roof accessories according to manufacturer's written instructions.

1. Install roof accessories level, plumb, true to line and elevation, and without warping, jogs in alignment, excessive oil canning, buckling, or tool marks.
2. Anchor roof accessories securely in place so they are capable of resisting indicated loads.
3. Use fasteners, separators, sealants, and other miscellaneous items as required to complete installation of roof accessories and fit them to substrates.
4. Install roof accessories to resist exposure to weather without failing, rattling, leaking, or loosening of fasteners and seals.

B. Metal Protection: Protect metals against galvanic action by separating dissimilar metals from contact with each other or with corrosive substrates by painting contact surfaces with bituminous coating or by other permanent separation as recommended by manufacturer.

1. Coat concealed side of uncoated aluminum roof accessories with bituminous coating where in contact with wood, ferrous metal, or cementitious construction.
2. Underlayment: Where installing roof accessories directly on cementitious or wood substrates, install a course of felt underlayment and cover with a slip sheet, or install a course of polyethylene sheet.
3. Bed flanges in thick coat of asphalt roofing cement where required by manufacturers of roof accessories for waterproof performance.

C. Roof-Hatch Installation:

1. Install roof hatch so top surface of hatch curb is level.
2. Verify that roof hatch operates properly. Clean, lubricate, and adjust operating mechanism and hardware.

D. Heat and Smoke Vent Installation:

1. Install heat and smoke vent so top perimeter surfaces are level.
2. Install and test heat and smoke vents and their components for proper operation according to NFPA 204.

E. Security Grilles: Weld bar intersections and, using tamper-resistant bolts, attach the ends of bars to structural frame or primary curb walls.

F. Seal joints with elastomeric or butyl sealant as required by roof accessory manufacturer.

3.3 REPAIR AND CLEANING

A. Clean exposed surfaces according to manufacturer's written instructions.

B. Clean off excess sealants.

C. Replace roof accessories that have been damaged or that cannot be successfully repaired by finish touchup or similar minor repair procedures.

END OF SECTION 077200

SECTION 079200 - JOINT SEALANTS

PART 1 - GENERAL

1.1 RELATED DOCUMENTS

A. Drawings and general provisions of the Contract, including General and Supplementary Conditions and Division 1 Specification Sections, apply to this Section.

1.2 SUMMARY

A. This Section includes:

1. Exterior sealants.
2. Exterior EIFS sealants.
3. Exterior and interior traffic sealants.
4. Interior sealants.
5. Interior food contact sealants.
6. Interior sanitary sealants.
7. Exterior and interior water immersed sealants.
8. Metal lap joint sealants.
9. Threshold and sheet metal bedding sealants.
10. Joint accessories.
11. Security sealants.

B. Related Sections include the following:

1. Division 4 Section "Unit Masonry" for masonry control and expansion joint fillers and gaskets.
2. Division 7 Section "Through Penetration Firestop System" for building joint-sealant systems.
3. Division 8 Section "Glazing" for glazing sealants.
4. Division 9 Section "Gypsum Board Assemblies" for sealing perimeter joints of gypsum board partitions to reduce sound transmission.
5. Division 9 Section "Acoustical Panel Ceilings" for sealing edge moldings at perimeters of acoustical ceilings.

1.3 SUBMITTALS

A. Shop Drawing:

1. Submit a Sealant Schedule, and related details, indicating specific installation and interface between sealants and building materials for each type of joint sealant and joint backing material used in this specification. Use SAME reference designations as indicated in this Specification for preparation of the Joint Sealant Schedule in Part 3.6. Submittals are subject to the requirements of Division 1 Specification Section “Submittals.”

B. Product Data:

1. For each joint-sealant product indicated.

C. Samples:

1. Submit standard cured color samples and charts for each sealant type illustrating full range of standard and custom colors.

D. Manufacturer's Certificate:

1. Signed by manufacturers of joint sealants certifying that products furnished comply with requirements and are suitable for the use indicated.
2. For manufacturer's products that include the phrase, "but are not limited to the following," the Contractor shall be responsible to provide certification that the submittal product complies with the specified product. This certification is subject to the requirements of Division 1 Specification Section "Submittals," Part 1, Definitions.

E. Qualifications Data:

1. For firms and persons specified in "Quality Assurance" Article to demonstrate their capabilities and experience. Include lists of completed projects with project names and addresses, names and addresses of architects and owners, and other information specified. Provide SWRI (Sealant, Waterproofing and Restoration Institute) Validation Certificate.

F. Compatibility and Adhesion from sealant manufacturer indicating the following:

1. Building materials forming joint and joint-sealant backings have been tested for compatibility and adhesion with joint sealants.
2. Interpretation of test results and written recommendations for primers and substrate preparation needed for adhesion.
3. Preconstruction Compatibility and Adhesion Field Test for each sealant and building material.

1.4 CLOSEOUT SUBMITTALS

A. Operation and Maintenance Data:

1. Submit recommended inspection intervals.
2. Submit instructions for repairing and replacing failed sealed joints.

1.5 QUALITY ASSURANCE

A. Installer Qualifications: Manufacturer's authorized representative who is trained and approved for installation of units required for this Project. Provide SWRI (Sealant, Waterproofing and Restoration Institute) Validation Certificate.

B. Source Limitations: Obtain each kind of joint sealant from single source from single manufacturer.

C. Mockups: Install sealant in mockups of assemblies specified in other Sections that are indicated to receive joint sealants specified in this Section. Use materials and installation methods specified in this Section.

D. Preinstallation Conference: Conduct conference at Project site.

1.6 DELIVERY, STORAGE AND HANDLING

A. Deliver materials to Project site in original unopened containers or bundles with labels indicating manufacturer, product name and designation, color, expiration date, pot life, curing time and mixing instructions for multicomponent materials.

B. Store and handle materials in compliance with manufacturer's written instructions to prevent their deterioration or damage due to moisture, high or low temperatures, contaminants or other causes.

1.7 PROJECT CONDITIONS

A. Environmental Limitations: Do not proceed with installation of joint sealants under the following conditions:

1. When ambient and substrate temperature conditions are outside limits permitted by joint-sealant manufacturer.
2. When ambient and substrate temperature conditions are outside limits permitted by joint sealant manufacturer or are below 40 deg F.
3. When joint substrates are wet.

B. Joint-Width Conditions: Do not proceed with installation of joint sealants where joint widths are less than those allowed by joint sealant manufacturer for applications indicated.

C. Joint-Substrate Conditions: Do not proceed with installation of joint sealants until contaminants capable of interfering with adhesion are removed from joint substrates.

1.8 WARRANTY

A. General Warranty: Special warranties specified in this Article shall not deprive Owner of other rights Owner may have under other provisions of the Contract Documents and shall be in addition to, and run concurrent with, other warranties made by Contractor under requirements of the Contract Documents.

B. Special Installer's Warranty: Written warranty, signed by Installer agreeing to repair or replace elastomeric joint sealants that do not comply with performance and other requirements specified in this Section within specified warranty period.

1. Warranty Period: Two years from date of Substantial Completion.

C. Special warranties specified in this Article exclude deterioration or failure of elastomeric joint sealants from the following:

1. Movement of the structure resulting in stresses on the sealant exceeding sealant manufacturer's written specifications for sealant elongation and compression caused by structural settlement or errors attributable to design or construction.
2. Disintegration of joint substrates from natural causes exceeding design specifications.

PART 2 - PRODUCTS

2.1 MATERIALS, GENERAL

A. Compatibility: Provide joint sealants, backings, and other related materials that are compatible with one another and with joint substrates under conditions of service and application, as demonstrated by joint-sealant manufacturer, based on testing and field experience for the following sealant types:

1. Multi-component sealants cure by chemical reaction. Cure times are predictable depending on atmospheric temperature. Silicone sealant cure is not affected by temperature, however, frost and moisture at bond line will impair adhesion.
2. Single component sealants cure by reaction with moisture. Cure times will vary depending on atmospheric humidity and temperature.
3. Fast cure (FC) sealants provide lesser cure times than corresponding standard cure products. Longer cure times will permit more accumulation of dust and other air-borne contamination on surface of sealant, potentially causing apparent color change.
4. Sealant Types are M – Multi-Component and S – Single Component.
5. Sealant Grades are P – Pourable or Self-Leveling used for horizontal traffic joints and NS – Non-Sag or Gunnable used for vertical and non-traffic joints.
6. Sealant Classes are 25, 50, and 100/50 (extension/compression) representing movement capability in percent of joint width. Joint movement is based on the relative percentage of installed width. Design to a minimum of 4 times anticipated movement to accommodate design tolerances and expected movement based on coefficient of thermal expansion.
7. Sealant Uses are T – Traffic, NT – Non-Traffic, I – Immersion, M – Mortar, A – Aluminum, and O – Other. Use O includes color anodized aluminum, metals other than aluminum, painted surfaces, brick, stone, tile, and wood for example.
8. Immersion rated sealant applications require primer.

B. VOC Content of Interior Sealants: Sealants and sealant primers used inside the weatherproofing system shall comply with the following limits for VOC content when calculated according to 40 CFR 59, Subpart D (EPA Method 24):

1. Architectural Sealants: 250 g/L.
2. Sealant Primers for Nonporous Substrates: 250 g/L.
3. Sealant Primers for Porous Substrates: 775 g/L.

C. Stain-Test-Response Characteristics: Where sealants are specified to be nonstaining to porous substrates, provide products that have undergone testing according to ASTM C 1248 and have not stained porous joint substrates indicated for Project.

D. Suitability for Contact with Food: Where sealants are indicated for joints that will come in repeated contact with food; provide products that comply with 21 CFR 177.2600.

E. Colors of Exposed Joint Sealants: As selected by Architect from manufacturer's full range of standard and custom colors.

2.2 URETHANE SEALANT TYPES – For exterior or interior use.

A. **U1** - Multi-Component, Non-Sag, Urethane: ASTM C920, Type M, Grade NS, Class 50; Uses NT. Subject to compliance with requirements, products that may be incorporated into the Work include, but are not limited to, the following:

1. Pecora Corporation; Dynatrol II.
2. Polymeric Systems, Inc.; PSI-270.
3. Tremco, Inc.; Dymeric 240 FC.

B. **U2** - Multi-Component, Traffic-Grade Urethane: ASTM C920, Type M, Grade NS, Class 50; Uses T, Subject to compliance with requirements, products that may be incorporated in the Work include, but are not limited to, the following:

1. Polymeric Systems, Inc.; PSI-270
2. Tremco, Inc.; Dymeric 240 FC.

C. **U3** - Single-Component, Non-Sag Urethane: ASTM C920, Type S, Grade NS, Class 100/50, Uses NT. Subject to compliance with requirements, products that may be incorporated into the Work include, but are not limited to, the following:

1. Sika Corporation, Construction Products Division; Sikaflex-15LM.
2. Tremco, Inc.; Dymonic 100

D. **U4** - Single-Component, Non-Sag Urethane: ASTM C920, Type S, Grade NS, Class 25, Uses NT. Subject to compliance with requirements, products that may be incorporated into the Work include, but are not limited to, the following:

1. Pecora Corporation; Dynatrol I-XL.
2. Sika Corporation, Construction Products Division; Sikaflex-1a.
3. Tremco, Inc.; Dymonic or Fulkem 116.

E. **U5** - Single-Component, Pourable, Traffic-Grade Urethane: ASTM C920, Type S, Grade P, Class 25, Uses T. Subject to compliance with requirements, products that may be incorporated into the Work include, but are not limited to, the following:

1. Pecora Corporation; Urexpan NR-201.
2. Tremco, Inc; Vulkem 45SSL.
3. Sika Corporation, Construction Products Division; Sikaflex-1CSL.

F. **U6** - Immersible, Single Component, Pourable, Traffic-Grade Urethane: ASTM C 920, Type S, Grade P, Class 25, Uses T and I. Subject to compliance with requirements, products that may be incorporated into the Work include, but are not limited to the following:

1. Sika Corporation, Construction Products Division; Sikaflex-1CSL.
2. Tremco, Inc.; Vulkem 45 SSL.

G. **U7** - Immersible, Multicomponent, Pourable, Traffic-Grade, Urethane Joint Sealant: ASTM C920. Type M, Grade P, Class 25, for Use T and I. Subject to compliance with requirements, products that may be incorporated into the Work include, but are not limited to, the following:

1. LymTal International, Inc.; Iso-Flex 880GB.
2. May National Associates, Inc.; Bondaflex PUR 2 SL.
3. Tremco, Inc.; Vulkem 245

2.3 SILICONE SEALANT TYPES – For exterior or interior use.

A. **S1** - Single-Component, Non-Staining, Non-Sag, Neutral-Curing Silicone: ASTM C920, Type S, Grade NS, Class 50, Uses NT. Subject to compliance with requirements, products that may be incorporated into the work include, but are not limited to the following:

1. Dow Corning Corporation; 756SMS, 791, 795 or 995.
2. Tremco, Inc.; Spectrem 3.
3. Pecora Corporation; 864, 895 or 898.

B. **S2** - Single Component, Non-Sag, Neutral-Curing Silicone: ASTM C920, Type S, Grade NS, Class 100/50, Uses NT. Subject to compliance with requirements, products that may be incorporated into the Work include, but are not limited to the following:

1. Dow Corning Corporation; 790
2. Pecora Corporation; 301NS, 311NS.
3. Tremco, Inc.; Spectrem 1.

C. **S3** - Single Component, Non-Sag, Neutral-Curing Silicone: ASTM C920, Type S, Grade NS, Class 50, Uses NT. Subject to compliance with requirements, products that may be incorporated into the Work include, but are not limited to the following:

1. Dow Corning Corporation; 791, 795 or 995.
2. Pecora Corporation; 864, 895 or 898.
3. Tremco, Inc.; Spectrem 2, Proglaze SSG.

D. **S-4** - Single Component, Field-Tintable, Non-Sag, Neutral-Curing Silicone: ASTM C920, Type S, Grade NS, Class 50, Uses NT. Subject to compliance with requirements, products that may be incorporated into the Work include, but are not limited to the following:

1. Pecora Corporation; 890 FTS.
2. Tremco, Inc.; Spectrem 4TS.

E. **S5** - Mildew-resistant, Single Component, Acid-Curing Silicone: ASTM C920, Type S, Grade NS, Class 25, uses NT. Subject to compliance with requirements, products that may be incorporated into the Work include, but are not limited to the following:

1. BASF Building Systems; Omniplus
2. Dow Corning Corporation; 786 Mildew Resistant.
3. Tremco, Inc.; Tremsil 200 Sanitary.

2.4 LATEX SEALANT TYPES – For Interior Use Only

A. **L1** – Acrylic Latex or Siliconized Acrylic Latex, ASTM C834, Type OP, Grade NF. Subject to compliance with requirements, products that may be incorporated into the Work include, but are not limited to the following:

1. BASF Building Systems; Sonolac.
2. Pecora Corporation; AC-20+.
3. Tremco, Inc.; Tremflex 834.

B. **L2** - Acoustical Joint Sealant for Exposed and Concealed Joints: ASTM C1311 Manufacturer's standard Non-sag, paintable, no staining latex sealant complying with ASTM C 834. Product effectively reduces airborne sound transmission through perimeter joints and openings in building construction as demonstrated by testing representative assemblies according to ASTM E90. Subject to compliance with requirements, products that may be incorporated into the Work include, but are not limited to the following:

1. Tremco, Inc.; Acoustical Sealant.
2. Pecora Corporation; AC-20 FTR, AIS-919.
3. USG Corporation; SHEETROCK Acoustical Sealant.

2.5 SOLVENT-RELEASE-CURING-JOINT SEALANTS:

A. **B1** - Butyl-Rubber-Based Joint Sealant: ASTM C 1311. Subject to compliance with requirements, products that may be incorporated into the Work include, but are not limited to the following.

1. Tremco, Inc.; Tremco Butyl Sealant.
2. Bostik, Inc.; Chem-Calk 300.
3. Pecora Corporation; BC-158.

2.6 PREFORMED JOINT SEALANTS – For exterior or interior applications per manufacturer's standards.

A. **PF1** - Preformed Silicone Joint Sealants: Manufacturer's standard sealant consisting of procured low-modulus silicone extrusion, in sizes to fit joint widths indicated, combined with a neutral-curing silicone sealant for bonding extrusions to substrates. Subject to compliance with requirements, products that may be incorporated into the Work include, but are not limited to the following:

1. Dow Corning Corporation; 123 Silicone Seal
2. Pecora Corporation; Sil-Span
3. Tremco, Inc.; Simple Seal.

B. **PF2** - Preformed Foam Joint Sealant: Manufacturer's standard preformed, precompressed, open-cell foam sealant manufactured from urethane foam with minimum density of 10 lb/cu.ft. (160 kg/cu.m) and impregnated with a nondrying, water-repellent agent. Factory produce in precompressed sizes in roll or stick form to fit joint widths indicated; coated on one side with a pressure-sensitive adhesive and covered with protective wrapping. Subject to compliance with

requirements, products that may be incorporated into the Work include, but are not limited to the following:

1. Tremco, Inc.; illbruk illmod 600.
2. EMSEAL Joint Systems, Ltd.; Emseal 25V.
3. School International, Inc.; Sealtite, Sealtite 50N.

2.7 JOINT SEALANT BACKING

A. General: Provide sealant backings of material that are nonstaining; are compatible with joint substrates, sealants, primers, and other joint fillers; and are approved for applications indicated by sealant manufacturer based on field experience and laboratory testing.

B. Cylindrical Sealant Backings: ASATM C 1330, of type indicated below and size and density to control sealant depth and otherwise contribute to producing optimum sealant performance, paired to the sealant type. List the type on the Sealant Schedule.

1. **Type C**: Closed-cell material with a surface skin.
2. **Type O**: Open-cell material.

    a. Bostik, Inc.
    b. Pecora Corporation
    c. Tremco, Inc.

2.8 MISCELLANEOUS MATERIALS

A. Primer: Material recommended by joint-sealant manufacturer where required for adhesion of sealant to joint substrates indicated, as determined from preconstruction joint-sealant-substrate tests and field tests.

B. Cleaners for Nonporous Surfaces: Chemical cleaners acceptable to manufacturers of sealants and sealant back materials, free of oil residues or other substances capable of staining or harming joint substrates and adjacent nonporous surfaces in any way, and formulated to promote optimum adhesion of sealants to joint substrates.

C. Masking Tape: Nonstaining, nonabsorbent material compatible with joint sealants and surfaces adjacent to joints.

2.9 EXISTING WORK

A. Mechanically remove existing sealant.

B. Clean joint surfaces of residual sealant and other contaminates capable of affecting sealant bond to joint surface.

C. Allow joint surfaces to dry before installing new sealants.

PART 3 - EXECUTION

3.1 EXAMINATION

A. Examine joints indicated to receive joint sealants, with Installer present, for compliance with requirements for joint configuration, installation tolerances, and other conditions affecting joint-sealant performance.

B. Proceed with installation only after unsatisfactory conditions have been corrected.

3.2 PREPARATION

A. Surface Cleaning of Joints: Clean out joints immediately before installing joint sealants to comply with joint-sealant manufacturer's written instructions and the following requirements:

1. Remove all foreign material from joint substrates that could interfere with adhesion of joint sealant, including dust, paints (except for permanent, protective coatings tested and approved for sealant adhesion and compatibility by sealant manufacturer), old joint sealants, oil, grease, waterproofing, water repellents, water, surface dirt, and frost.
2. Clean porous joint substrate surfaces by brushing, grinding, mechanical abrading, or a combination of these methods to produce a clean, sound substrate capable of developing optimum bond with joint sealants. Remove loose particles remaining from above cleaning operations above by vacuuming or blowing out joints with oil-free compressed air. Porous joint surfaces include, but are not limited to, the following:

    a. Concrete.
    b. Masonry.
    c. Unglazed surfaces of ceramic tile.
    d. Exterior insulation and finish systems.

3. Remove laitance and form-release agents from concrete.
4. Clean nonporous joint substrate surfaces with chemical cleaners or other means that do not stain, harm substrates, or leave residues capable of interfering with adhesion of joint sealants. Nonporous surfaces include, but are not limited to, the following:

    a. Metal.
    b. Glass.
    c. Porcelain enamel.
    d. Glazed surfaces of ceramic tile.

B. Joint Priming: Prime joint substrates where recommended by joint-sealant manufacturer or as indicated by preconstruction joint-sealant-substrate tests or prior experience. Apply primer to comply with joint-sealant manufacturer's written instructions. Confine primers to areas of joint-sealant bond; do not allow spillage or migration onto adjoining surfaces.

C. Masking Tape: Use masking tape where required to prevent contact of sealant or primer with adjoining surfaces that otherwise would be permanently stained or damaged by such contact or

by cleaning methods required to remove sealant smears. Remove tape immediately after tooling without disturbing joint seal.

3.3 INSTALLATION OF JOINT SEALANTS

A. General: Comply with joint-sealant manufacturer's written installation instructions for products and applications indicated, unless more stringent requirements apply.

B. Sealant Installation Standard: Comply with recommendations in ASTM C 1193 for use of joint sealants as applicable to materials, applications, and conditions indicated.

C. Install sealant backings of type indicated to support sealants during application and at position required to produce cross-sectional shapes and depths of installed sealants relative to joint widths that allow optimum sealant movement capability.

1. Do not leave gaps between ends of sealant backings.
2. Do not stretch, twist, puncture, or tear sealant backings.
3. Remove absorbent sealant backings that have become wet before sealant application and replace them with dry materials.

D. Install bond-breaker tape behind sealants where sealant backings are not used between sealants and backs of joints.

E. Install sealants using proven techniques to comply with the following and at the same time backings are installed:

1. Place sealants so they directly contact and fully wet joint substrates.
2. Completely fill recesses in each joint configuration.
3. Produce uniform, cross-sectional shapes and depths relative to joint widths that allow optimum sealant movement capability.

F. Tooling of Nonsag Sealants: Immediately after sealant application and before skinning or curing begins, tool sealants according to requirements specified below to form smooth, uniform beads of configuration indicated; to eliminate air pockets; and to ensure contact and adhesion of sealant with sides of joint.

1. Remove excess sealant from surfaces adjacent to joints.
2. Use tooling agents that are approved in writing by sealant manufacturer and that do not discolor sealants or adjacent surfaces.
3. Provide concave joint profile per Figure 8A in ASTM C 1193, unless otherwise indicated.
4. Provide flush joint profile where indicated per Figure 8B in ASTM C1193.
5. Provide recessed joint configuration of recess depth and at locations indicated per Figure 8C in ASTM C 1193.

    a. Use masking tape to protect surfaces adjacent to recessed tooled joints.

G. Installation of Preformed Silicone-Sealant System: Comply with the following requirements:

1. Apply masking tape to each side of joint, outside of area to be covered by sealant system.

2. Apply silicone sealant to each side of joint to produce a bead of size complying with preformed silicone-sealant system manufacturer's written instructions and covering a bonding area of not less than 3/8 inch (10 mm). Hold edge of sealant bead ¼ inch (6 mm) inside masking tape.
3. Within 10 minutes of sealant application, press silicone extrusion into sealant to wet extrusion and substrate. Use a roller to apply consistent pressure and ensure uniform contact between sealant and both extrusion and substrate.
4. Complete installation of sealant system in horizontal joints before installing in vertical joints. Lap vertical joints over horizontal joints. At ends of joints, cut silicone extrusion with a razor knife.

H. Installation of Preformed Foam Sealants: Install each length of sealant immediately after removing protective wrapping. Do not pull or stretch material. Produce seal continuity at ends, turns, and intersections of joints. For applications at low ambient temperatures, apply heat to sealant in compliance with sealant manufacturer's written instructions.

I. Acoustical Sealant Installation: At sound-rated assemblies and elsewhere as indicated, seal construction at perimeters, behind control joints, and at openings and penetrations with a continuous bead of acoustical sealant. Install acoustical sealant at both faces of partitions at perimeters and through penetrations. Comply with ASTM C 919 and with manufacturer's written recommendations.

3.4 CLEANING

A. Clean off excess sealant or sealant smears adjacent to joints as the Work progresses by methods and with cleaning materials approved in writing by manufacturers of joint sealants and of products in which joints occur.

3.5 PROTECTION

A. Protect joint sealants during and after curing period from contact with contaminating substances and from damage resulting from construction operations or other causes so sealants are without deterioration or damage at time of Substantial Completion. If, despite such protection, damage or deterioration occurs, cut out and remove damaged or deteriorated joint sealants immediately so installations with repaired areas are indistinguishable from original work.

3.6 JOINT-SEALANT SCHEDULE

Sealant types should be selected from the available listed products in Part 2 of this specification section. These sealants shall be indicated on the submittal schedule, using the same reference designation as indicated in Part 1.3.A. of this specification section.

A. Exterior or Interior Sealant Joints

1. Applications:

a. Control and expansion joints in cast-in-place concrete.
b. Joints between [architectural] [structural] precast concrete units.
c. Control and expansion joints in unit masonry.
d. Control and expansion joints in stone masonry.
e. Butt joints between metal panels.
f. Joints between different materials listed above.
g. Perimeter joints between materials listed above and frames of doors, windows, storefronts, louvers and similar openings.
h. Control and expansion joints in soffits and overhead surfaces.

2. Other exterior joints in vertical surfaces and non-traffic horizontal surfaces for which no other sealant is specified

B. Interior Food Contact Sealant Joints.

1. Applications:

a. Joints in kitchen counter tops and work surfaces.
b. Joints between food service equipment and surrounding construction.
c. Other interior joints where incidental food contact may occur.

C. Interior Sanitary Sealant Joints.

1. Applications:

a. Joints in toilet room and bathroom counter tops.
b. Joints between plumbing fixtures and adjacent materials.
c. Joints between locker room lockers and adjacent materials.
d. Joints between food service equipment and surrounding construction.
e. Other interior joints in wet areas where needed to limit mold and mildew growth.

D. Immersed Sealant Joints.

1. Applications:

a. Joints in fountains and water features.
b. Joints in swimming pools.
c. Joints in vertical and horizontal surfaces of other potable water storage structures.

E. Metal Lap and Bedding Sealant Joints.

1. Applications:

a. Concealed lap and hook joints in sheet metal flashing and trim.
b. Bedding joints under metal thresholds and saddles.
c. Bedding joints between sheet metal flashing and other materials.

F. Preformed Joint Sealants:

1. Applications:

a. Control and expansion joints in cast-in-place concrete.
b. Joints between [architectural] [structural] precast concrete units.
c. Control and expansion joints in unit masonry.
d. Control and expansion joints in stone masonry.
e. Butt joints between metal panels.
f. Joints between different materials listed above.
g. Perimeter joints between materials listed above and frames of doors, windows, storefronts, louvers and similar openings.
h. Control and expansion joints in soffits and overhead surfaces.
i. Other exterior joints in vertical surfaces and non-traffic horizontal surfaces for which no other sealant is specified.
j. Joints between EIFS and other materials.

END OF SECTION 079200

SECTION 079500 – EXPANSION CONTROL

PART 1 - GENERAL

1.1 RELATED DOCUMENTS

A. Drawings and general provisions of the Contract, including General and Supplementary Conditions and Division 1 Specification Sections, apply to this Section.

1.2 SUMMARY

A. This Section includes metal interior expansion joint cover assemblies for floors, walls and ceilings.

B. Related Requirements:

1. Division 7 Section "Firestopping" for fire-resistive assemblies used in conjunction with expansion joint cover assemblies.
2. Division 7 Section "Joint Sealants" for liquid-applied and premolded elastomeric sealants for filling expansion joints.
3. Division 9 Sections for finishes scheduled to be applied to walls, ceilings and floors.

1.3 ACTION SUBMITTALS

A. Shop Drawings: For each expansion control system specified. Include plans, elevations, sections, details, splices, block-out requirement, attachments to other work, and line diagrams showing entire route of each expansion control system. Where expansion control systems change planes, provide isometric or clearly detailed drawing depicting how components interconnect.

B. Samples: For each exposed expansion control system and for each color and texture specified, full width by 6 inches long in size.

C. Samples for Initial Selection: For each type of expansion control system indicated.

1. Include manufacturer's color charts showing the full range of colors and finishes available for each exposed metal and elastomeric seal material.

D. Samples for Verification: For each type of expansion control system indicated, full width by 6 inches long in size.

E. Product Schedule: Prepared by or under the supervision of the supplier. Include the following information in tabular form:

1. Manufacturer and model number for each expansion control system.

2. Expansion control system location cross-referenced to Drawings.
3. Nominal joint width.
4. Movement capability.
5. Materials, colors, and finishes.
6. Product options.
7. Fire-resistance ratings.

1.4 INFORMATIONAL SUBMITTALS

A. Product Test Reports: For each fire barrier provided as part of an expansion control system, for tests performed by a qualified testing agency.

1.5 QUALITY ASSURANCE

A. Fire-Test-Response Characteristics: Where indicated, provide expansion joint cover assemblies identical to those assemblies whose fire resistance has been determined per ANSI/UL 263, NFPA 251, or ASTM E 119, including hose stream test of vertical wall assemblies, by a testing and inspecting agency acceptable to authorities having jurisdiction.

1. Fire-Resistance Ratings: Not less than the rating of adjacent construction.

B. Provide for accessibility compliance where required per new or existing conditions. Do not exceed maximum height variation as permitted by accessibility requirements.

PART 2 - PRODUCTS

2.1 SYSTEM DESCRIPTION

A. General: Provide expansion control systems of design, basic profile, materials, and operation indicated. Provide units with capability to accommodate variations in adjacent surfaces.

1. Furnish units in longest practicable lengths to minimize field splicing. Install with hairline mitered corners where expansion control systems change direction or abut other materials.
2. Include factory-fabricated closure materials and transition pieces, T-joints, corners, cross-connections, and other accessories as required to provide continuous expansion control systems.

2.2 PERFORMANCE REQUIREMENTS

A. Fire-Resistance Ratings: Where indicated, provide expansion control systems with fire barriers identical to those of systems tested for fire resistance per UL 2079 or ASTM E 1966 by a testing and inspecting agency acceptable to authorities having jurisdiction.

1. Hose Stream Test: Wall-to-wall and wall-to-ceiling systems shall be subjected to hose stream testing.

2.3 INTERIOR EXPANSION CONTROL SYSTEMS

A. Basis-of-Design Manufacturer: Subject to compliance with requirements, provide expansion joint cover assemblies manufactured by Construction Specialties, Inc. (C/S Group), or comparable products by one of the following:

1. Architectural Art Mfg., Inc.; Division of Pittcon Industries.
2. Balco, Inc.
3. JointMaster/InPro Corporation.
4. MM Systems Corporation.
5. Nystrom, Inc.

B. Source Limitations: Obtain expansion control systems from single source from single manufacturer.

C. Floor-to-Floor:

1. Basis-of-Design Product: C/S Group "GFST-200" where floor finishes up to 1/8-inch-thick are scheduled; "GFS-200" at all other locations.
2. Design Criteria:

a. Nominal Joint Width: 2 inches, or as otherwise indicated on Drawings.
b. Movement Capability: -25 percent/+75 percent.
c. Type of Movement: Thermal.
d. Load Capacity:

1) Uniform Load: 150 lb/sq. ft.
2) Concentrated Load: 2,000 lb.
3) Maximum Deflection: 0.5 inch.

e. Fire-Resistance Rating: Provide expansion control system and fire-barrier assembly with a rating not less than that of adjacent construction.

3. Type: Recessed elastomeric seal, with hidden center plate.

a. Cover-Plate Design: Plain, serrated, or recessed to accept field-applied finish materials, depending on type required.

1) Cover-Plate Recess Depth: For models required to accept flooring, recess depth shall be 1/8 inch.

b. Metal: Aluminum.
c. Seal Material: Santoprene.

D. Floor-to-Wall:

1. Basis-of-Design Product: C/S Group “GFSTW-200” where floor finishes up to 1/8-inch-thick are scheduled; “GFSW-200” at all other locations.
2. Design Criteria:

    a. Nominal Joint Width: 2 inches, or as otherwise indicated on Drawings.
    b. Movement Capability: -25 percent/+75 percent.
    c. Type of Movement: Thermal.
    d. Fire-Resistance Rating: Provide expansion control system and fire-barrier assembly with a rating not less than that of adjacent construction.

3. Type: Recessed elastomeric seal, with hidden center plate.

    a. Cover-Plate Design: Plain, serrated, or recessed to accept field-applied finish materials, depending on type required.

        1) Cover-Plate Recess Depth: For models required to accept flooring, recess depth shall be 1/8 inch.

    b. Metal: Aluminum.
    c. Seal Material: Santoprene.

E. Wall-to-Wall:

1. Basis-of-Design Product:

    a. Gypsum Board Assembly Walls: C/S Group “FWF-200;” at 90-degree corners, “FWFC-200.”
    b. Gypsum Board Assembly Walls to Masonry Walls (90-degree corners): C/S Group “FWFC-200.”
    c. All Masonry Walls: C/S Group “FWF-200M;” at 90-degree corners, “FWFC-200M.”

2. Design Criteria:

    a. Nominal Joint Width: 2 inches, or as otherwise indicated on Drawings.
    b. Movement Capability: -25 percent/+75 percent.
    c. Type of Movement: Thermal.
    d. Fire-Resistance Rating: Provide expansion control system and fire-barrier assembly with a rating not less than Provide expansion control system and fire-barrier assembly with a rating not less than that of adjacent construction.

3. Type: Elastomeric seal.

    a. Metal: Aluminum.
    b. Seal Material: Santoprene.

F. Wall-to-Ceiling:

1. Basis-of-Design Product:

a. Gypsum Board Assembly Ceilings (or similar rigid materials): C/S Group "FWFC-200."
b. Gypsum Board Assembly Ceilings to Masonry Walls (90-degree corners): C/S Group "FWFC-200."
c. Do not provide expansion joint cover assemblies for acoustical tile or similar suspended grid ceiling systems.

2. Design Criteria:

a. Nominal Joint Width: 2 inches, or as otherwise indicated on Drawings.
b. Movement Capability: -25 percent/+75 percent.
c. Type of Movement: Thermal.
d. Fire-Resistance Rating: Provide expansion control system and fire-barrier assembly with a rating not less than Provide expansion control system and fire-barrier assembly with a rating not less than that of adjacent construction.

3. Type: Elastomeric seal.

a. Metal: Aluminum.
b. Seal Material: Santoprene.

G. Ceiling-to-Ceiling:

1. Basis-of-Design Product:

a. Gypsum Board Assembly Ceilings (or similar rigid materials): C/S Group "FWF-200." Do not provide expansion joint cover assemblies for acoustical tile or similar suspended grid ceiling systems.

2. Design Criteria:

a. Nominal Joint Width: 2 inches, or as otherwise indicated on Drawings.
b. Movement Capability: -25 percent/+75 percent.
c. Type of Movement: Thermal.
d. Fire-Resistance Rating: Provide expansion control system and fire-barrier assembly with a rating not less than Provide expansion control system and fire-barrier assembly with a rating not less than that of adjacent construction.

3. Type: Elastomeric seal.

a. Metal: Aluminum.
b. Seal Material: Santoprene.

2.4 MATERIALS

A. Aluminum: ASTM B 221, Alloy 6063-T5 for extrusions; ASTM B 209, Alloy 6061-T6 for sheet and plate.

1. Apply manufacturer's standard protective coating on aluminum surfaces to be placed in contact with cementitious materials.

B. Elastomeric Seals: ASTM E 1783; preformed elastomeric membranes or extrusions to be installed in metal frames.

1. Color: As selected by Architect from manufacturer's full range for each type or location.

C. Fire Barriers: Any material or material combination, when fire tested after cycling, designated to resist the passage of flame and hot gases through a movement joint and to meet performance criteria for required fire-resistance rating.

D. Nonmetallic, Shrinkage-Resistant Grout: ASTM C 1107/C 1107M, factory-packaged, nonmetallic aggregate grout, noncorrosive, nonstaining, mixed with water to consistency suitable for application and a 30-minute working time.

E. Accessories: Manufacturer's standard anchors, clips, fasteners, set screws, spacers, and other accessories compatible with material in contact, as indicated or required for complete installations.

2.5 GENERAL FINISH REQUIREMENTS

A. Comply with NAAMM's "Metal Finishes Manual for Architectural and Metal Products" for recommendations for applying and designating finishes.

B. Protect mechanical finishes on exposed surfaces from damage by applying a strippable, temporary protective covering before shipping.

C. Appearance of Finished Work: Noticeable variations in same piece are not acceptable. Variations in appearance of adjoining components are acceptable if they are within the range of approved Samples and are assembled or installed to minimize contrast.

2.6 ALUMINUM FINISHES

A. Clear Anodic Finish: AAMA 611, AA-M12C22A41, Class I, 0.018 mm or thicker.

PART 3 - EXECUTION

3.1 EXAMINATION

A. Examine surfaces where expansion control systems will be installed for installation tolerances and other conditions affecting performance of work.

1. Proceed with installation only after unsatisfactory conditions have been corrected.

3.2 PREPARATION

A. Prepare substrates according to expansion control system manufacturer's written instructions.

B. Coordinate and furnish anchorages, setting drawings, and instructions for installing expansion control systems. Provide fasteners of metal, type, and size to suit type of construction indicated and to provide for secure attachment of expansion control systems.

3.3 INSTALLATION

A. Comply with manufacturer's written instructions for storing, handling, and installing expansion control systems and materials unless more stringent requirements are indicated.

B. Metal Frames: Perform cutting, drilling, and fitting required to install expansion control systems.

1. Install in true alignment and proper relationship to joints and adjoining finished surfaces measured from established lines and levels.
2. Adjust for differences between actual structural gap and nominal design gap due to ambient temperature at time of installation. Notify Architect where discrepancies occur that will affect proper expansion control system installation and performance.
3. Cut and fit ends to accommodate thermal expansion and contraction of metal without buckling of frames.
4. Repair or grout block-out as required for continuous frame support using nonmetallic, shrinkage-resistant grout.
5. Install frames in continuous contact with adjacent surfaces.

    a. Shimming is not permitted.

6. Locate anchors at interval recommended by manufacturer, but not less than 3 inches from each end and not more than 24 inches o.c.

C. Seals in Metal Frames: Install elastomeric seals and membranes in frames to comply with manufacturer's written instructions. Install with minimum number of end joints.

1. Provide in continuous lengths for straight sections.
2. Seal transitions according to manufacturer's written instructions. Vulcanize or heat-weld field-spliced joints as recommended by manufacturer.
3. Installation: Mechanically lock seals into frames or adhere to frames with adhesive or pressure-sensitive tape as recommended by manufacturer.

D. Terminate exposed ends of expansion control systems with field- or factory-fabricated termination devices.

E. Fire-Resistance-Rated Assemblies: Coordinate installation of expansion control system materials and associated work so complete assemblies comply with assembly performance requirements.

1. Fire Barriers: Install fire barriers to provide continuous, uninterrupted fire resistance throughout length of joint, including transitions and field splices.

3.4 PROTECTION

A. Do not remove protective covering until finish work in adjacent areas is complete. When protective covering is removed, clean exposed metal surfaces to comply with manufacturer's written instructions.

B. Protect the installation from damage by work of other Sections. Where necessary due to heavy construction traffic, remove and properly store cover plates or seals and install temporary protection over expansion control systems. Reinstall cover plates or seals prior to Substantial Completion of the Work.

END OF SECTION 079500

SECTION 081113 - HOLLOW METAL DOORS AND FRAMES

PART 1 - GENERAL

1.1 RELATED DOCUMENTS

A. Drawings and general provisions of the Contract, including General and Supplementary Conditions and Division 1 Specification Sections, apply to this Section.

1.2 SUMMARY

A. This Section includes the following:

1. Factory primed, field painted steel doors.
2. Factory primed, field painted steel door frames.
3. Factory primed, field painted borrowed-lite frames.
4. Factory primed, field painted fire-rated door and frame assemblies.

B. Related Sections include the following:
1. Division 4 Section "Unit Masonry (Assemblies)" for building anchors into and grouting frames in masonry construction.
2. Division 8 Section “Flush Wood Doors” for wood doors that get installed in hollow metal frames.
3. Division 8 Section "Door Hardware" for door hardware and weather-stripping.
4. Division 8 Section “General Glazing” for glass in steel doors and sidelights.
5. Division 9 Section “Painting” for field painting primed doors and frames.
6. Divisions 26 through 28 Electrical Sections for power wiring and low voltage requirements for electrified hardware.

1.3 DEFINITIONS

A. Minimum Thickness: Minimum thickness of base metal without coatings.

B. Standard Hollow Metal Work: Hollow metal work fabricated according to ANSI/ SDI A250.8.

1.4 PREINSTALLATION MEETINGS

A. Pre-installation Conference: Conduct conference at Project site in accordance with Division 1 Section “Project Meetings”.

1. The Pre-installation Conference shall include representatives of the Owner’s access control and security vendors. Prior to proceeding with the Work, the Contractor shall coordinate all equipment and rough-in requirements with these Owner vendors to ensure all required pathways, junction boxes, etc., are installed correctly.

1.5 SUBMITTALS

A. General: Submit each item in this Article according to the Conditions of the Contract and Division 1 Specification Sections.

B. Product Data for each type of door and frame specified, including details of construction, materials, dimensions, hardware preparation, core, label compliance, sound ratings, profiles, and finishes.

C. Door hardware supplier shall furnish templates, template reference number and/or physical hardware to the steel door and frame supplier to prepare the doors and frames to receive the finish hardware items.

D. Shop Drawings: Include the following:

1. Schedule: Provide a schedule of hollow metal work prepared by or under the supervision of supplier, using same reference numbers for details and openings as those on Drawings. Coordinate with door hardware schedule.
2. Elevations of each door design.
3. Details of doors, including vertical and horizontal edge details and metal thicknesses.
4. Frame details for each frame type, including dimensioned profiles and metal thicknesses.
5. Locations of reinforcement and preparations for hardware.
6. Details of each different wall opening condition.
7. Details of anchorages, joints, field splices, and connections.
8. Details of accessories.
9. Details of moldings, removable stops, and glazing.
10. Details of conduit and preparations for power, signal, and control systems. **Include point-to-point wiring diagrams showing the following:**

    a. Power requirements for each electrically operated door hardware component.
    b. Location and types of switches, signal device, conduit sizes, and number and size of wires.

E. Door Schedule: Submit schedule of doors and frames using **SAME** reference numbers for details and openings as those on Contract Documents.

1. Indicate coordination of glazing frames and stops with glass and glazing requirements.

F. Product Test Reports: Based on evaluation of comprehensive tests performed by a qualified testing agency, for each type of hollow metal door and frame assembly.

1.6 QUALITY ASSURANCE

A. Provide doors and frames complying with ANSI/SDI 100 “Recommended Specifications for Standard Steel Doors and Frames” and as specified.

B. Fire-Rated Door Assemblies: Units that comply with NFPA 80, are identical to door and frame assemblies tested for fire-test-response characteristics per ASTM E152, and are labeled and

listed by UL, Warnock Hersey, or another testing and inspecting agency acceptable to authorities having jurisdiction.

1. Temperature-Rise Rating: Where indicated, provide doors that have a temperature-rise rating of 450 deg. F maximum in 30 minutes of fire exposure.

1.7 DELIVERY, STORAGE, AND HANDLING

A. Deliver doors and frames cardboard-wrapped or crated to provide protection during transit and job storage. Provide additional protection to prevent damage to finish of factory-finished doors and frames.

B. Deliver welded frames with two removable spreader bars across bottom of frames, tack welded to jambs and mullions.

C. Inspect doors and frames on delivery for damage. Minor damages may be repaired provided refinished items match new work and are acceptable to Architect; otherwise, remove and replace damaged items as directed.

D. Store doors and frames at building site under cover. Place units on minimum 4-inch- high wood blocking. Avoid using non-vented plastic or canvas shelters that could create a humidity chamber. If cardboard wrappers on doors become wet, remove cartons immediately. Provide minimum 1/4-inch spaces between stacked doors to promote air circulation.

1.8 COORDINATION

A. Field Measurements: Verify actual dimensions of openings by field measurement before fabrication.

B. Coordinate installation of anchorages for hollow metal frames. Furnish setting drawings, templates, and directions for installing anchorages, including sleeves, concrete and masonry inserts, anchor bolts, and items with integral anchors. Deliver such items to Project site in time for installation.

C. Coordinate requirements for installation of electrified door hardware, access control and security systems.

1.9 WARRANTY

A. Special Warranty: Manufacturer's standard form in which manufacturer agrees to repair or replace doors that fail in materials or workmanship within specified warranty period.

B. Warranty includes installation and finishing that may be required due to repair or replacement of defective doors.

PART 2 - PRODUCTS

2.1 MANUFACTURERS

A. Source Limitations: Obtain hollow doors and frames from a single source, from a single manufacturer.

B. Manufacturers: Subject to compliance with requirements, available manufacturers offering products that may be incorporated into the Work include, but are not limited to, the following:

1. Steelcraft; an Allegion company.
2. Amweld Building Products, LLC.
3. CECO Door Products; an ASSA ABLOY Group company.
4. Curries Company; an ASSA ABLOY Group company.

2.2 REGULATORY REQUIREMENTS

A. Fire-Rated Assemblies: Complying with NFPA 80 and listed and labeled by a qualified testing agency acceptable to authorities having jurisdiction for fire-protection ratings and temperature-rise limits indicated, based on testing at positive pressure according to NFPA 252 or UL 10C.

1. Smoke- and Draft-Control Assemblies: Provide an assembly with gaskets listed and labeled for smoke and draft control by a qualified testing agency acceptable to authorities having jurisdiction, based on testing according to UL 1784 and installed in compliance with NFPA 105.
2. Temperature-Rise Limit: At vertical exit enclosures and exit passageways, provide doors that have a maximum transmitted temperature end point of not more than 450 deg. F above ambient after 30 minutes of standard fire-test exposure.

B. Fire-Rated, Borrowed-Lite Assemblies: Complying with NFPA 80 and listed and labeled by a testing and inspecting agency acceptable to authorities having jurisdiction for fire-protection ratings indicated, based on testing according to NFPA 257 or UL 9. Label each individual glazed lite.

C. Smoke-Control Door Assemblies: Comply with NFPA 105 or UL 1784.

2.3 MATERIALS

A. Hot-Rolled Steel Sheets and Strip: Commercial-quality carbon steel, pickled and oiled, complying with ASTM A569.

B. Cold-Rolled Steel Sheet: Carbon steel complying with ASTM A366, commercial quality, or ASTM A620, drawing quality, special killed.

C. Metallic-Coated Steel Sheet: ASTM A653, Commercial Steel (CS), Type B; with minimum G60 or A60 metallic coating.

D. Frame Anchors: ASTM A591, Commercial Steel (CS), 4oz coating designation; mill phosphatized. For anchors built into exterior walls, steel sheet complying with ASTM A1008 or ASTM A1011, hot-dip galvanized according to ASTM A153, Class B.

E. Inserts, Bolts, and Fasteners: Manufacturer's standard units. Where items are to be built into exterior walls, hot-dip galvanize complying with ASTM A153, Class C or D as applicable.

F. Powder-Actuated Fasteners in Concrete: Fastener system of type suitable for application indicated, fabricated from corrosion-resistant materials, with clips or other accessory devices for attaching hollow metal frames of type indicated.

G. Grout: ASTM C476, except with a maximum slump of 4 inches, as measured according to ASTM C143.

H. Bituminous Coating: Cold-applied asphalt mastic, SSPC-Paint 12, compounded for 15-mil dry film thickness per coat. Provide inert-type non-corrosive compound free of asbestos fibers, sulfur components, and other deleterious impurities.

2.4 HOLLOW METAL DOORS

A. General: Provide doors of design indicated, not less than thickness indicated; fabricated with smooth surfaces, without visible joints or seams on exposed faces unless otherwise indicated. Comply with ANSI/SDI A250.8.

1. Design: 1-3/4-inch flush panel; full flush door edges with continuous laser weld.

   a. Provide undercuts as noted on the Door Schedule.

2. Core Construction: As follows:

   a. Standard Interior Doors: Manufacturer's standard honeycomb core.
   b. Fire Doors: Manufacturer's standard core as required to provide fire-protection and temperature-rise ratings indicated.
   c. Exterior Doors: 1.8 lb/cu. ft. density polyurethane core, laminated to both face sheets with contact adhesive; capable of carrying the following minimum thermal-resistance properties:

      1) ASTM C518, Calculated: 10.0 R-Value; 0.10 U-Factor.
      2) ASTM C1363, Operable: 2.9 R-Value; 0.35 U-Factor.

3. Vertical Edges: Vertical edges to have the face sheets joined by a continuous weld extending the full height of the door. Welds are to be ground, filled and dressed smooth.

   a. Vertical Edges for Single-Acting Doors: Beveled edge; 1/8 inch in 2 inches.
   b. Edges for Double-Acting Doors: Round vertical edges with 2-1/8-inch radius.

4. Top and Bottom Edges: Closed with inverted 15-gauge-thick minimum end closures or channels of same material as face sheets, extending full width of the door and welded to face sheet.
5. Tolerances: Comply with SDI 117, "Manufacturing Tolerances for Standard Steel Doors and Frames."

B. Exterior Doors: Face sheets fabricated from metallic-coated steel sheet. Provide doors complying with requirements indicated below by referencing ANSI/SDI A250.8 for level and model and ANSI/SDI A250.4 for physical performance level:

1. Extra heavy-duty, Level 3, Model 2, seamless design, minimum 0.053-inch thick (16 Ga.) galvanized steel sheet faces.

C. Interior Doors: Face sheets fabricated from cold-rolled steel sheet. Provide doors complying with requirements indicated below by referencing ANSI/SDI A250.8 for level and model and ANSI/SDI A250.4 for physical performance level:

1. Heavy-duty, Level 2, Model 2, seamless design, minimum 0.042-inch-thick (18 Ga.) cold-rolled steel sheet faces Hardware Reinforcement: Fabricate according to ANSI/SDI A250.6 with reinforcing plates from same material as door face sheets.

a. At interior locations noted to be galvanized, provide extra heavy-duty, Level 3, Model 2 doors.

D. Hinge Reinforcement: Minimum 7 gauge plate, 1-1/4 inch x 9 inches, or minimum 14 gauge continuous channel with pierced holes, drilled and tapped.

E. Fabricate concealed stiffeners and hardware reinforcement from either cold- or hot-rolled steel sheet.

2.5 HOLLOW METAL FRAMES

A. General: Comply with ANSI/SDI A250.8 and with details indicated for type and profile.

B. Exterior Frames: Fabricated from metallic-coated (galvanized) steel sheet.

1. Fabricate frames with mitered or coped corners, face-welded unless otherwise indicated.
2. Frames for Level 3 Steel Doors: 16-gauge-thick steel sheet.

C. Interior Frames: Fabricated from cold-rolled steel sheet; provide metallic-coated steel sheet where specifically indicated.

1. Fabricate frames with mitered or coped corners.
2. Fabricate frames as face-welded, unless otherwise indicated.
3. Fabricate knocked-down, drywall slip-on frames for in-place gypsum board partitions.

a. Frames with sidelites in drywall installations shall be welded.

4. Frames for Level 2 and Level 3 Steel Doors, Wood Doors and Borrowed Lights: 16-gauge-thick steel sheet.

    a. Fabricate interior frames from metallic-coated steel sheet where doors are noted to be galvanized in the Door Schedule.

D. Hardware Reinforcement: Fabricate according to ANSI/SDI A250.6 with reinforcement plates from same material as frames.

E. Plaster Guards: Provide minimum 0.0179-inch-thick steel plaster guards or mortar boxes at back of hardware cutouts where mortar or other materials might obstruct hardware operation and to close off interior of openings.

F. Grout: When required in masonry construction, as specified in Division 4 Section "Unit Masonry (Assemblies)."

2.6 FRAME ANCHORS

A. Jamb Anchors:

1. Masonry Type: Adjustable strap-and-stirrup or T-shaped anchors to suit frame size, not less than 19 gauge thick, with corrugated or perforated straps not less than 2 inches wide by 10 inches long; or wire anchors not less than 7 gauge thick.
2. Stud-Wall Type: Designed to engage steel stud, welded to back of frames; not less than 19 gauge thick.
3. Compression Type for Drywall Slip-on Frames: Adjustable compression anchors.
4. Post-installed Expansion Type for In-Place Concrete or Masonry: Minimum 3/8-inch-diameter bolts with expansion shields or inserts. Provide pipe spacer from frame to wall, with throat reinforcement plate, welded to frame at each anchor location.

B. Floor Anchors: Provided at each jamb, formed from A60 metallic-coated material, minimum 19-gauge-thick.

2.7 STOPS AND MOLDINGS

A. Moldings for Glazed Lites in Doors: Minimum 22-gauge-thick, fabricated from same material as door face sheet in which they are installed.

B. Fixed Frame Moldings: Formed integral with hollow metal frames, a minimum of 5/8 inch high unless otherwise indicated.

C. Loose Stops for Glazed Lites in Frames: Minimum 22-gauge-thick, fabricated from same material as frames in which they are installed.

2.8 ACCESSORIES

A. Mullions and Transom Bars: Join to adjacent members by welding or rigid mechanical anchors.

B. Grout Guards: Formed from same material as frames, minimum 8-gauge-thick.

C. Metal Louvers: Door and frame manufacturer's standard metal louvers, unless otherwise indicated. Provide louvers where noted in the Door Schedule.

1. Blade Type: Vision proof, inverted V or Y shape.
2. Metal and Finish: Galvanized steel, minimum 20-gauge-thick, factory-primed for factory-painted, powder-coated finish. Match pre-finished door and frame paint color, where applicable.
3. Louvers for Fire-Rated Doors: Metal louvers with fusible link and closing device, listed and labeled for use in doors with fire protection rating of 90 minutes and less; meet fire rating as indicated.

2.9 FABRICATION

A. Fabricate hollow metal doors and frames to be rigid and free of defects, warp, or buckle. Accurately form metal to required sizes and profiles, with minimum radius for thickness of metal. Where practical, fit and assemble units in manufacturer's plant. To ensure proper assembly at Project site, clearly identify work that cannot be permanently factory assembled before shipment.

B. Tolerances: Fabricate hollow metal work to tolerances indicated in SDI 117.

C. Hollow Metal Doors:

1. Exterior Doors: Provide weep-hole openings in bottom of exterior doors to permit moisture to escape. Seal joints in top edges of doors against water penetration.
2. Glazed Lites: Factory-cut openings in doors.
3. Astragals: Provide overlapping astragal on one leaf of pairs of doors where required by NFPA 80 for fire-performance rating or where indicated. Extend minimum 3/4 inch beyond edge of door on which astragal is mounted.

D. Hollow Metal Frames: Where frames are fabricated in sections due to shipping or handling limitations, provide alignment plates or angles at each joint, fabricated of same thickness metal as frames.

1. Welded Frames: Weld flush face joints continuously; grind, fill, dress, and make smooth, flush, and invisible.
2. Sidelight and Transom Bar Frames: Provide closed tubular members with no visible face seams or joints, fabricated from same material as door frame. Fasten members at crossings and to jambs by butt welding.
3. Provide countersunk, flat- or oval-head exposed screws and bolts for exposed fasteners unless otherwise indicated.
4. Grout Guards: Weld guards to frame at back of hardware mortises in frames to be grouted.
5. Jamb Anchors: Provide number and spacing of anchors as follows:

a. Masonry Type: Locate anchors not more than 18 inches from top and bottom of frame. Space anchors not more than 32 inches o.c. and as follows:

1) Two anchors per jamb up to 60 inches high.

2) Three anchors per jamb from 60 to 90 inches high.
3) Four anchors per jamb from 90 to 120 inches high.
4) Four anchors per jamb plus 1 additional anchor per jamb for each 24 inches or fraction thereof above 120 inches high.

b. Stud-Wall Type: Locate anchors not more than 18 inches from top and bottom of frame. Space anchors not more than 32 inches o.c. and as follows:

1) Three anchors per jamb up to 60 inches high.
2) Four anchors per jamb from 60 to 90 inches high.
3) Five anchors per jamb from 90 to 96 inches high.
4) Five anchors per jamb plus 1 additional anchor per jamb for each 24 inches or fraction thereof above 96 inches high.
5) Two anchors per head for frames above 42 inches wide and mounted in metal-stud partitions.

c. Compression Type: Not less than two anchors in each jamb.
d. Post-installed Expansion Type: Locate anchors not more than 6 inches from top and bottom of frame. Space anchors not more than 26 inches o.c.

6. Door Silencers: Except on weather-stripped doors, drill stops to receive door silencers as follows. Keep holes clear during construction.

a. Single-Door Frames: Drill stop in strike jamb to receive three door silencers.
b. Double-Door Frames: Drill stop in head jamb to receive two door silencers.

E. Fabricate concealed stiffeners, edge channels, and hardware reinforcement from either cold- or hot-rolled steel sheet.

F. Hardware Preparation: Factory prepare hollow metal work to receive templated mortised hardware; include cutouts, reinforcement, mortising, drilling, and tapping according to the Door Hardware Schedule and templates furnished as specified in Division 8 Section "Door Hardware."

1. Locate hardware as indicated, or if not indicated, according to ANSI/SDI A250.8.
2. Reinforce doors and frames to receive non-templated, mortised and surface-mounted door hardware. Provide minimum 14-gauge closer reinforcement.
3. Comply with applicable requirements in ANSI/SDI A250.6 and ANSI/DHI A115 Series specifications for preparation of hollow metal work for hardware.
4. Coordinate locations of conduit and wiring boxes for electrical connections.

G. Electrified Hardware Coordination: Factory-weld 18 gauge electrical knockout boxes to frame for electrical hardware preparation, including, but not limited to, through-wire transfer hardware, raceways and wiring harnesses, door position switches, electric strikes, magnetic locks and jamb-mounted card readers, as specified in the hardware sets in Division 8 Section “Door Hardware” and Division 26 through 28 Electrical Sections.

1. Provide electrical knockout boxes with dual 1/2-inch and 3/4-inch knockouts.
2. Conduit shall be coordinated and installed in the field from middle hinge box and strike box, and strike box to door position box.
3. Electrical knockout boxes shall comply with NFPA requirements and accommodate electrical door hardware, per door hardware set requirements.

4. Electrical knockout boxes for continuous hinges shall be located in the center of vertical dimension on hinge jamb.

H. Stops and Moldings: Provide stops and moldings around glazed lites where indicated. Form corners of stops and moldings with butted or mitered hairline joints.

1. Single Glazed Lites: Provide fixed stops and moldings welded on secure side of hollow metal work.
2. Multiple Glazed Lites: Provide fixed and removable stops and moldings so that each glazed lite is capable of being removed independently.
3. Provide fixed frame moldings on outside of exterior and on secure side of interior doors and frames.
4. Provide loose stops and moldings on inside of hollow metal work.
5. Coordinate rabbet width between fixed and removable stops with type of glazing and type of installation indicated.
6. Glazing: Comply with requirements in Division 8 Sections “General Glazing” and “Fire-Rated Glazing” and with hollow metal door manufacturer’s written instructions.

2.10 FINISHES, GENERAL

A. Comply with NAAMM’s “Metal Finishes Manual” for recommendations relative to applying and designating finishes.

B. Comply with SSPC-PA-1, “Paint Application Specification No. 1,” for steel sheet finishes.

C. Apply primers and organic finishes to doors and frames after fabrication.

2.11 GALVANIZED STEEL SHEET FINISHES

A. Surface Preparation: Clean surfaces with nonpetroleum solvent so that surfaces are free of oil or other contaminants. After cleaning, apply a conversion coating of the type suited to the organic coating applied over it. Clean welds, mechanical connections, and abraded areas, and apply galvanizing repair paint specified below to comply with ASTM A780.

1. Galvanizing Repair Paint: High-zinc-dust-content paint for re-galvanizing welds in galvanized steel, with dry film containing not less than 94 percent zinc dust by weight, and complying with DOD-P-21035 or SSPC-Paint 20.

B. Factory Priming for Field-Painted Finish: Where field painting after installation is indicated, apply air-dried primer specified below immediately after cleaning and pretreatment.

1. Shop Primer: Zinc-dust, zinc-oxide primer paint complying with performance requirements of FS TT-P-641, Type II.

2.12 STEEL SHEET FINISHES

A. Surface Preparation: Solvent-clean surfaces to comply with SSPC-SP 1 to remove dirt, oil, grease, and other contaminants that could impair paint bond. Remove mill scale and rust, if present, from uncoated steel to comply with SSPC-SP 5 (White Metal Blast Cleaning) or SSPC-SP-8 (Pickling).

B. Pretreatment: Immediately after surface preparation, apply a conversion coating of type suited to organic coating applied over it.

C. Factory Priming for Field-Painted Finish: Apply shop primer that compiles with ANSI A224.1 acceptance criteria, is compatible with finish paint systems indicated, and has capability to provide a sound foundation for field-applied topcoats. Apply primer immediately after surface preparation and pretreatment.

PART 3 - EXECUTION

3.1 EXAMINATION

A. Examine substrates, areas, and conditions with Installer present, for compliance with requirements for installation tolerances and other conditions affecting performance of the Work.

1. Contractor shall verify the accuracy of all dimensions indicated for existing openings in which new hollow metal frames and doors are scheduled to be installed, as well as existing frames scheduled to remain and accommodate new doors and/or hardware. Verify existing frame conditions to include, but not be limited to, locations of strikes and hinges and hinge backsets, for new hardware provisions.

B. Examine roughing-in for embedded and built-in anchors to verify actual locations before frame installation.

C. For the record, prepare written report, endorsed by Installer, listing conditions detrimental to performance of the Work.

D. Proceed with installation only after unsatisfactory conditions have been corrected.

3.2 PREPARATION

A. Remove welded-in shipping spreaders installed at factory. Restore exposed finish by grinding, filling, and dressing, as required to make repaired area smooth, flush, and invisible on exposed faces.

B. Prior to installation, adjust and securely brace welded hollow metal frames for squareness, alignment, twist, and plumbness to the following tolerances:

1. Squareness: Plus or minus 1/16 inch, measured at door rabbet on a line 90 degrees from jamb perpendicular to frame head.

2. Alignment: Plus or minus 1/16 inch, measured at jambs on a horizontal line parallel to plane of wall.
3. Twist: Plus or minus 1/16 inch, measured at opposite face corners of jambs on parallel lines, and perpendicular to plane of wall.
4. Plumbness: Plus or minus 1/16 inch, measured at jambs on a perpendicular line from head to floor.

C. Drill and tap doors and frames to receive non-templated, mortised, and surface-mounted door hardware.

3.3 INSTALLATION

A. General: Install hollow metal work plumb, rigid, properly aligned, and securely fastened in place; comply with Drawings and manufacturer's written instructions.

B. Hollow Metal Frames: Install hollow metal frames of size and profile indicated. Comply with ANSI/SDI A250.11.

1. Set frames accurately in position, plumbed, aligned, and braced securely until permanent anchors are set. After wall construction is complete, remove temporary braces, leaving surfaces smooth and undamaged.

   a. At fire-protection-rated openings, install frames according to NFPA 80.
   b. Where frames are fabricated in sections because of shipping or handling limitations, field splice at approved locations by welding face joint continuously; grind, fill, dress, and make splice smooth, flush, and invisible on exposed faces.
   c. Install frames with removable glazing stops located on secure side of opening.
   d. Install door silencers in frames <u>before grouting.</u>
   e. Remove temporary braces necessary for installation only after frames have been properly set and secured.
   f. Check plumbness, squareness, and twist of frames as walls are constructed. Shim as necessary to comply with installation tolerances.
   g. <u>Field-apply bituminous coating to backs of frames that are filled with grout containing anti-freezing agents.</u>

2. Metal-Stud Partitions: Solidly pack mineral-fiber insulation behind frames.
3. Masonry Walls: Coordinate installation of frames to allow for solidly filling space between frames and masonry with grout.
4. In-Place Masonry Construction: Secure frames in place with post-installed expansion anchors. Countersink anchors, and fill and make smooth, flush, and invisible on exposed faces.
5. In-Place Gypsum Board Partitions: Secure frames in place with post-installed expansion anchors through floor anchors at each jamb. Countersink anchors, and fill and make smooth, flush, and invisible on exposed faces.
6. Installation Tolerances: Adjust hollow metal door frames for squareness, alignment, twist, and plumb to the following tolerances:

   a. Squareness: Plus or minus 1/16 inch, measured at door rabbet on a line 90 degrees from jamb perpendicular to frame head.

b. Alignment: Plus or minus 1/16 inch, measured at jambs on a horizontal line parallel to plane of wall.
c. Twist: Plus or minus 1/16 inch, measured at opposite face corners of jambs on parallel lines, and perpendicular to plane of wall.
d. Plumbness: Plus or minus 1/16 inch, measured at jambs at floor.

C. Hollow Metal Doors: Fit hollow metal doors accurately in frames, within clearances specified below. Shim as necessary.

1. Non-Fire-Rated Standard Steel Doors:

a. Jambs and Head: 1/8 inch plus or minus 1/16 inch.
b. Between Edges of Pairs of Doors: 1/8 inch plus or minus 1/16 inch.
c. Between Bottom of Door and Top of Threshold: Maximum 3/8 inch.
d. Between Bottom of Door and Top of Finish Floor (No Threshold): Maximum 3/4 inch.

2. Fire-Rated Doors: Install doors with clearances according to NFPA 80.
3. Smoke-Control Doors: Install doors according to NFPA 105.

D. Glazing: Comply with installation requirements in Division 8 Sections "General Glazing" and “Fire-Rated Glazing” and with hollow metal manufacturer's written instructions.

1. Secure stops with countersunk flat- or oval-head machine screws spaced uniformly, between 2 inches o.c. and 9 inches o.c. from each corner.

3.4 ADJUSTING AND CLEANING

A. Final Adjustments: Check and readjust operating hardware items immediately before final inspection. Leave work in complete and proper operating condition. Remove and replace defective work, including hollow metal work that is warped, bowed, or otherwise unacceptable.

B. Remove grout and other bonding material from hollow metal work immediately after installation.

C. Prime-Coat Touchup: Immediately after erection, sand smooth rusted or damaged areas of prime coat and apply touchup of compatible air-drying, rust-inhibitive primer.

D. Metallic-Coated Surfaces: Clean abraded areas and repair with galvanizing repair paint according to manufacturer's written instructions.

END OF SECTION 081113

SECTION 081416 - FLUSH WOOD DOORS

PART 1 - GENERAL

1.1 RELATED DOCUMENTS

A. Drawings and general provisions of the Contract, including General and Supplementary Conditions and Division 1 Specification Sections, apply to this Section.

1.2 SUMMARY

A. This Section includes the following:

1. Solid-core doors with wood-veneer faces.
2. Factory finishing flush wood doors.
3. Factory fitting flush wood doors to frames and factory machining for hardware.

B. Related Sections include the following:

1. Division 8 Section “Door Hardware” for door hardware requirements.
2. Division 8 Section “General Glazing” for glass view panels in flush wood doors.
3. Division 8 Section “Fire-Rated Glazing” for glass view panels in fire-rated flush wood doors.
4. Division 8 Section “Hollow Metal Doors and Frames” for metal frames for wood doors.
5. Divisions 26 through 28 Electrical Sections for power wiring and low voltage requirements for electrified hardware.

1.3 SUBMITTALS

A. Product Data: For each type of door. Include details of core and edge construction and trim for openings. Include factory-finishing specifications**.**

B. Shop Drawings: Indicate location, size, and hand of each door; elevation of each kind of door; construction details not covered in Product Data; location and extent of hardware blocking; and other pertinent data.

1. Indicate dimensions and locations of mortises and holes for hardware.
2. Details of doors, including vertical and horizontal edge details.
3. Indicate dimensions and locations of cutouts.
4. Indicate doors to be factory finished and finish requirements.
5. Indicate fire ratings for fire doors.
6. Indicate preparations for power, signal, and control systems.

C. Door Schedule: Use **SAME** reference designations indicated on Drawings in preparing schedule for doors and frames.

D. Samples for Initial Selection: Color charts consisting of actual materials in small sections for the following:

1. Faces of Factory-Finished Doors: Show the full range of colors available for stained finishes.

1.4 QUALITY ASSURANCE

A. Source Limitations: Obtain flush wood doors through one source from a single manufacturer.

B. Quality Standard: Comply with WDMA Architectural Woodwork Quality Standards Illustrated.

1. Provide WDMA Quality Certification Labels or a WDMA letter of licensing for Project indicating that doors comply with requirements of grades specified.
2. When requested, provide evidence that the installer has successful experience completing projects of similar scope and with products as specified herein.

C. Fire-Rated Wood Doors: Doors complying with NFPA 80 that are listed and labeled by a testing and inspecting agency acceptable to authorities having jurisdiction, for fire ratings indicated, based on testing according to NFPA 252.

1.5 DELIVERY, STORAGE, AND HANDLING

A. Comply with requirements of referenced standard and manufacturer's written instructions.

B. Package doors individually in plastic bags.

C. Mark each door on top and bottom rail with opening number used on Shop Drawings.

1.6 PROJECT CONDITIONS

A. Environmental Limitations: Do not deliver or install doors until building is enclosed, wet work is complete, and HVAC system is operating and will maintain temperature and relative humidity at occupancy levels during the remainder of the construction period.

1.7 WARRANTY

A. Special Warranty: Manufacturer's standard form, signed by manufacturer, Installer, and Contractor, in which manufacturer agrees to repair or replace doors that are defective in materials or workmanship, have warped (bow, cup, or twist), or show telegraphing of core construction in face veneers exceeding 0.01 inch in a 3-inch span.

1. Warranty shall also include installation and finishing that may be required due to repair or replacement of defective doors.
2. Warranty shall be in effect during the following period of time from date of Substantial Completion:

a. Solid-Core Interior Doors: Life of installation.

PART 2 - PRODUCTS

2.1 MANUFACTURERS

A. Acceptable Manufacturers: Basis of Design Product – Marshfield Algoma Aspiro Series by Masonite Architectural Subject to compliance with all specified requirements, the following manufacturers' products may also be incorporated into the Work:

1. Flush Wood Doors:

a. VT Industries/Eggers.
b. Lambton.

B. Manufacturers other than those listed above will not be accepted – <u>No substitutions will be allowed.</u>

2.2 DOOR CONSTRUCTION, GENERAL

A. Doors for Transparent Finish:

1. Grade: Premium, with Grade A faces.
2. Species and Cut: White Maple, plain sliced.
3. Veneer flitch match: Book match, running match.
4. Pair Match: Provide for doors hung in same opening or separated only by mullions.
5. Stiles: Same species as faces.

2.3 SOLID-CORE DOORS

A. Particleboard Cores: Comply with the following requirements:

1. Particleboard: ANSI A208.1, Grade LD-2, 32 lb. density.
2. Blocking: Provide solid wood blocking in particleboard-core doors for installation of hardware.

B. Interior Veneer-Faced Doors:

1. Core: Particleboard.
2. Construction: Five plies with stiles and rails bonded to core, then entire unit abrasive planed and then veneered or laminated in a one-step hot press method.

C. Fire-Rated Doors:

1. Construction: Construction and core specified above for type of face indicated or manufacturer's standard mineral-core construction as needed to provide fire rating indicated.
2. Blocking: For mineral-core doors, provide composite blocking with improved screw-holding capability approved for use in doors of fire ratings indicated for installation of hardware.

    a. Doors with exit devices provide top rail, bottom rail and 5 x 10 right and left lock blocks.

3. Edge Construction: At hinge stiles, provide manufacturer's standard veneer-edge construction with improved screw-holding capability and split resistance and with outer stile matching face veneer.

    a. At locations where new doors are being retrofitted into existing frames, provide lumber edge doors to all for minor field fitting.

4. Pairs: Furnish formed-steel edges and astragals with intumescent seals for pairs of fire-rated doors, unless otherwise indicated.

    a. Finish steel edges and astragals with baked enamel.

5. Pairs with Surface Mounted Panic Devices: Provide fire-rated pairs with fire-retardant stiles matching face veneer that are labeled and listed for kinds of applications indicated without formed-steel edges and astragals. Provide stiles with concealed intumescent seals.
6. Intumescent Seals For Fire Rated Doors: Category “A” doors with manufacturer’s standard concealed intumescent seals.

2.4 LIGHT FRAMES

A. Wood Beads for Light Openings in Wood Doors:

1. Wood Species: Same species as door faces.
2. Profile: Flush rectangular beads.
3. At 20-minute, fire-rated, wood-core doors, provide wood beads and metal glazing clips approved for such use.

B. Wood-Veneered Beads for Light Openings in Fire Doors: Manufacturer's standard wood-veneered noncombustible beads matching veneer species of door faces and approved for use in doors of fire rating indicated. Include concealed metal glazing clips where required for opening size and fire rating indicated.

C. Metal Louvers: Where doors are indicated in the Door Schedule to receive louvers, provide the following:

1. Manufacturers: Subject to compliance with requirements, available manufacturers offering products that may be incorporated into the Work include, but are not limited to, the following:

    a. Air Louvers, Inc.; a division of the Activar Construction Products Group.
    b. Anemostat Products; a Mestek company.
    c. L & L Louvers, Inc.
    d. Louvers & Dampers, Inc.; a division of Mestek, Inc.
    e. McGill Architectural Products.

2. Blade Type: Vision-proof, inverted Y or V.
3. Metal and Finish: Cold-rolled steel, 18-gauge frames with 22-gauge blades, factory-finished. Color to be selected by Architect from manufacturer's full range of available colors.

2.5 FABRICATION

A. Factory fit doors to suit frame-opening sizes indicated, with the following uniform clearances and bevels, unless otherwise indicated:

    1. Comply with clearance requirements of referenced quality standard for fitting. Comply with requirements in NFPA 80 for fire-rated doors.

B. Factory machine doors for hardware that is not surface applied. Locate hardware to comply with DHI-WDHS-3. Comply with final hardware schedules, door frame Shop Drawings, DHI A115-W series standards, and hardware templates.

    1. Coordinate measurements of hardware mortises in metal frames to verify dimensions and alignment before factory machining.
    2. Metal Astragals: Pre-machine astragals and formed-steel edges for hardware for pairs of fire-rated doors.

C. Openings: Cut and trim openings through doors to comply with applicable requirements of referenced standards for kind(s) of door(s) required.

    1. Light and Louver Openings: Trim openings with moldings of material and profile indicated.

2.6 FACTORY FINISHING

A. General: Comply with WDMA Architectural Woodwork Quality Standards Illustrated for factory finishing.

B. Finish doors at factory.

C. Transparent Finish:

    1. Grade: Premium.

2. Finish: WDMA System TR-6 catalyzed polyurethane, or UV cured polyurethane.
3. Staining: To be selected by Architect from manufacturer's full range of stain colors.
4. Effect: Open-grain finish.
5. Sheen: Satin.

PART 3 - EXECUTION

3.1 EXAMINATION

A. Examine doors and installed door frames before hanging doors.

1. Verify that frames comply with indicated requirements for type, size, location, and swing characteristics and have been installed with level heads and plumb jambs.
2. Reject doors with defects, and replace at no cost to Owner.

B. Proceed with installation only after unsatisfactory conditions have been corrected.

3.2 INSTALLATION

A. Hardware: For installation, see Division 8 Section "Door Hardware."

B. Manufacturer's Written Instructions: Install doors to comply with manufacturer's written instructions, referenced quality standard, and as indicated.

1. Install fire-rated doors in corresponding fire-rated frames according to NFPA 80.

C. Factory-Fitted Doors: Align in frames for uniform clearance at each edge.

D. Factory-Finished Doors: Restore finish before installation if fitting or machining is required at Project site.

3.3 ADJUSTING

A. Operation: Rehang or replace doors that do not swing or operate freely.

B. Finished Doors: Replace doors that are damaged or do not comply with requirements. Doors may be repaired or refinished if work complies with requirements and shows no evidence of repair or refinishing.

END OF SECTION 081416

SECTION 083113 - ACCESS DOORS AND FRAMES

PART 1 - GENERAL

1.1 RELATED DOCUMENTS

A. Drawings and general provisions of the Contract, including General and Supplementary Conditions and Division 01 Specification Sections, apply to this Section.

1.2 SUMMARY

A. Section includes access doors and frames for walls, ceilings and floors.

B. Related Requirements:

1. Division 8 Section “Roof Accessories” for roof hatches.
2. Division 8 Section “Door Hardware” for mortise cylinders and related cores to be installed in access doors.

1.3 ACTION SUBMITTALS

A. Product Data: For each type of product.

1. Include construction details**,** fire ratings**,** material descriptions, dimensions of individual components and profiles, and finishes.

B. Samples: For each type of access door and frame and for each finish specified, complete assembly minimum 6 by 6 inches in size.

C. Product Schedule: For access doors and frames, including types, sizes, construction details, latching or locking provisions, and other data pertaining to installation. Indicate general locations by using room names and numbers shown on the Drawings.

PART 2 - PRODUCTS

2.1 PERFORMANCE REQUIREMENTS

A. Fire-Rated Access Doors and Frames: Assemblies complying with NFPA 80 that are listed and labeled by a qualified testing agency, for fire-protection and temperature-rise limit ratings indicated, according to NFPA 252 or UL 10B.

2.2 MANUFACTURERS

A. Manufacturers: Subject to compliance with requirements, available manufacturers offering products that may be incorporated into the Work include, but are not limited to, the following:

1. Acudor Products, Inc.
2. Babcock-Davis.
3. Cendrex, Inc.
4. Elmdor/Stoneman; a Div. of Acorn Engineering Co.
5. J. L. Industries, Inc.; a Div. of Activar Construction Products Group, Inc.
6. Karp Associates, Inc.
7. Lane-Aire Manufacturing Corp.
8. Larsen's Manufacturing Company.
9. Maxam Metal Products Ltd.
10. Metropolitan Door Industries Corp.
11. MIFAB Manufacturing, Inc.
12. Milcor Limited Partnership.
13. Nystrom Building Products Co.
14. Precision Plumbing Products, Inc.
15. Williams Bros. Corporation of America (The).

2.3 ACCESS DOORS AND FRAMES FOR WALLS AND CEILINGS

A. Standard Flush Access Doors with Exposed Flanges:

1. Description: Type "**AD-1**;" non-fire-rated, low security level.
2. Design: Face of door flush with frame, with exposed perimeter flanges and concealed hinges.
3. Door Sizes (width by height):
   a. Ceilings: As indicated on Drawings.
   b. Walls: 16 by 30 inches (1630); 22 by 30 inches (2230).
4. Steel Finishes for Doors: One of the following, as indicated:
   a. Uncoated Steel Sheet (STL): Nominal 14 gauge, factory-primed for field painting.
   b. Stainless-Steel Sheet (SST): Nominal 14 gauge, No. 4 finish.
5. Drawing Designation (example): AD-1-1630-STL.
6. Frame Material: Nominal 16 gauge, minimum, of same material and finish as door.
7. Latch and Lock: Cam latch, screwdriver-operated, with interior release. Generally for access doors in ceilings and walls in areas not accessible to the public.
8. Hinges: Concealed continuous piano hinge.

B. Security Flush Access Doors with Exposed Flanges:

1. Description: Type "**AD-2**;" non-fire-rated, medium security level.
2. Design: Face of door flush with frame, with exposed perimeter flanges and concealed hinges.
3. Locations: Walls, where indicated on Drawings.
4. Door Sizes (width by height):
   a. Ceilings: As indicated on Drawings.
   b. Walls: 20 by 30 inches (2030); 22 by 30 inches (2230); 24 by 30 inches (2430).
5. Steel Finishes for Doors: One of the following, as indicated:

a. Uncoated Steel Sheet (STL): Nominal 12 gauge, factory-primed for field painting.
b. Stainless-Steel Sheet (SST): Nominal 12 gauge, No. 4 finish.

6. Drawing Designation (example): AD-2-2230-SST.
7. Frame Material: Same material, thickness, and finish as door.
8. Masonry Frame Anchors: Minimum 12 gauge thickness, approximately 4 inches long by 3/4 inch wide; minimum two per jamb side, securely fastened to frame and spaced at no less than 16 inches o.c.
9. Latch and Lock: Cam latch, key-operated, with interior release; prepared for mortise cylinder, per Door Hardware Set No. 418 as described in Division 8 Section "Door Hardware." Generally for access doors in areas accessible to the public.
10. Hinges: Concealed continuous piano hinge.

C. Fire-Rated, Flush Access Doors with Exposed Flanges:

1. Description: Type "**AD-3**;" fire- and smoke-rated applications; medium security level.
2. Design: Face of door flush with frame, uninsulated; with exposed perimeter flanges, self-closing door, and concealed hinges.

a. Fire-Resistance Rating: 90 minutes.
b. Temperature-Rise Rating: 450 deg F at the end of 30 minutes.

3. Door Size (Walls; width by height): 24 by 30 inches (2430).
4. Steel Finishes for Doors: Stainless-Steel Sheet (SST): Nominal 14 gauge, No. 4 finish.
5. Drawing Designation (example): AD-3-2430-SST.
6. Frame Material: Nominal 16 gauge, minimum, of same material and finish as door.
7. Gaskets: Manufacturer's standard fire-rated, UL-listed perimeter gaskets, mechanically bonded to frame.
8. Spring Closers: Manufacturer's standard, heavy duty spring, with end hooks fastened to frame and door; adjustable for assuring tight closure.
9. Latch and Lock: Cam latch, key-operated, with interior release; prepared for mortise cylinder, per Door Hardware Set No. 418 as described in Division 8 Section "Door Hardware." Generally for access doors in walls in areas accessible to the public.
10. Hinges: Concealed continuous piano hinge.

2.4 STEEL FLOOR DOORS (FLOOR HATCHES)

A. Angle Frame Steel Floor Door:

1. Manufacturers: Subject to compliance with requirements, available manufacturers offering products that may be incorporated into the Work include, but are not limited to, the following:

a. Acudor Products, Inc.
b. Babcock-Davis.
c. Bilco Company (The).
d. Cendrex, Inc.
e. Milcor Limited Partnership.
f. Nystrom Building Products Co.
g. Thompson Fabricating, LLC.
h. U.S.F. Fabrication.

i. Williams Bros. Corporation of America (The).

2. Frame: Prime-painted steel, angle profile.
3. Door: Single leaf, unless otherwise indicated; 3/16- or 1/4-inch-thick, diamond pattern; prime-painted steel plate.
4. Floor Hatch Sizes: As indicated on Drawings.
5. Options: Debris gasket.
6. Hardware:

   a. Material and Finish: Manufacturer's standard.
   b. Hinges: Heavy-duty butt hinges with stainless steel pins.
   c. Operating Mechanism: Adjustable counterbalancing springs, heavy-duty hold-open arm that automatically locks door open at 90 degrees, release handle with vinyl grip that allows for one-handed closure, and recessed lift handle.
   d. Latch: Stainless-steel slam latch.
   e. Lock: Recessed padlock hasp with cover.

2.5 MATERIALS

A. Steel Plates, Shapes, and Bars: ASTM A 36.

B. Steel Sheet: Uncoated or electrolytic zinc coated, ASTM A 879, with cold-rolled steel sheet substrate complying with ASTM A 1008, Commercial Steel (CS), exposed.

C. Stainless-Steel Sheet, Strip, Plate, and Flat Bars: ASTM A 666, Type 304. Remove tool and die marks and stretch lines, or blend into finish.

D. Rolled-Steel Floor Plate: ASTM A 786, rolled from plate complying with ASTM A 36 or ASTM A 283, Grade C or D.

E. Masonry Frame Anchors: Metallic-Coated Steel Sheet; ASTM A 653, Commercial Steel (CS), Type B; with minimum G60 or A60 metallic coating.

F. Inserts, Bolts, and Anchor Fasteners: Hot-dip galvanized steel according to ASTM A 153 or ASTM F 2329; provide stainless-steel where exposed in stainless-steel door and frame assemblies.

2.6 FABRICATION

A. General: Provide access door and frame assemblies manufactured as integral units ready for installation.

B. Metal Surfaces: For metal surfaces exposed to view in the completed Work, provide materials with smooth, flat surfaces without blemishes. Do not use materials with exposed pitting, seam marks, roller marks, rolled trade names, or roughness.

C. Doors and Frames: Grind exposed welds smooth and flush with adjacent surfaces. Furnish mounting holes, attachment devices and fasteners of type required to secure access doors to types of supports indicated.

D. Latch and Lock Hardware – Wall and Ceiling Doors:

1. Quantity: Furnish number of latches and locks required to hold doors tightly closed.
2. Mortise Cylinder Preparation: Where indicated, prepare door panel to accept cylinder and core specified in Division 8 Section “Door Hardware.”

E. Latching Mechanisms – Floor Doors:

1. For recessed panel doors, provided access sleeves for each locking device. Furnish plastic grommets and install in holes cut through finish.

2.7 FINISHES

A. Comply with NAAMM's "Metal Finishes Manual for Architectural and Metal Products" for recommendations for applying and designating finishes.

B. Protect mechanical finishes on exposed surfaces from damage by applying a strippable, temporary protective covering before shipping.

C. Appearance of Finished Work: Noticeable variations in same piece are not acceptable. Variations in appearance of adjoining components are acceptable if they are within the range of approved Samples and are assembled or installed to minimize contrast.

1. Factory Primed: Apply manufacturer's standard, lead- and chromate-free, universal primer immediately after surface preparation and pretreatment.

2. Access Panels shall be painted to match adjacent surface. Final Color to BE SELECTED BY ARCHITECT ONLY, no other design team member is approved to select color. If contractor proceeds without architect color selection it is deemed not approved and is to be repainted with selection by architect.

D. Stainless-Steel Finishes:

1. Surface Preparation: Remove tool and die marks and stretch lines, or blend into finish.
2. Bright, Cold-Rolled, Unpolished Finish: No. 2B.

PART 3 - EXECUTION

3.1 EXAMINATION

A. Examine substrates for compliance with requirements for installation tolerances and other conditions affecting performance of the Work.

B. Proceed with installation only after unsatisfactory conditions have been corrected.

3.2 INSTALLATION

A. Comply with manufacturer's written instructions for installing access doors and frames.

1. Access Doors in Ceilings: Coordinate locations of filters, valves or similar equipment with ceiling framing members to ensure access door will be properly located for access and maintenance of above-ceiling items. Coordinate with Mechanical, Plumbing and Electrical Drawings.
2. Access Doors in Walls:
    a. In unit masonry walls, locate tops of 30-inch-high units at a height of 48 inches above the floor surface, or at nearest masonry course, unless otherwise directed by the Architect prior to constructing the opening. Provide solid masonry units at sills.
    b. Where access doors are located on endwalls of toilet room chases, center access door to width of chase; if width of door is less than 2 inches narrower than width of chase, access door opening on either side of chase may be flush with chase wall.
    c. Where access doors are located on same wall of toilet room fixtures, determine locations of toilet partitions, including mounting brackets, and toilet accessories, including grab bar escutcheons. Center access doors between wall-mounted items.
3. Floor Doors: For floor doors located within existing elevated slabs, saw-cut and remove existing concrete and floor deck as needed to accommodate unit size. Remove concrete to width and depth needed to install integral anchors. Fill void with concrete or grout, flush with surrounding floor construction.

3.3 ADJUSTING

A. Adjust doors and hardware, after installation, for proper operation.

END OF SECTION 083113

SECTION 083313 - COILING COUNTER DOORS

PART 1 - GENERAL

1.1 RELATED DOCUMENTS

A. Drawings and general provisions of the Contract, including General and Supplementary Conditions and Division 1 Specification Sections, apply to this Section.

1.2 SUMMARY

A. This Section includes the following:

1. Manually operated, non-fire-rated, face mounted counter doors.

B. Related Sections include the following:

1. Division 5 Section "Metal Fabrications" for miscellaneous steel supports and stainless steel for adjacent components.

1.3 SUBMITTALS

A. Product Data: For each type and size of coiling counter door and accessory.

1. Include construction details, material descriptions, dimensions of individual components, profiles for slats, and finishes.
2. Include rated capacities, operating characteristics, and furnished accessories.

B. Shop Drawings: For each installation and for special components not dimensioned or detailed in manufacturer's product data.

1. Include plans, elevations, sections, and mounting details.
2. Include details of equipment assemblies, and indicate dimensions, required clearances, method of field assembly, components, and location and size of each field connection.
3. Include points of attachment and their corresponding static and dynamic loads imposed on structure.
4. Show locations of locking devices, and other accessories.

C. Samples for Verification: For each type of exposed finish on the following components, in manufacturer's standard sizes:

1. Curtain slats.
2. Bottom bar.
3. Guides.

D. Maintenance Data: For coiling counter doors to include in maintenance manuals.

1.4 WARRANTY

A. Beginning at Substantial Completion, provide a one (1) year Warranty with maintenance service on an as-needed basis. Maintenance shall be performed by skilled workers of the coiling-door Installer. Include repair or replacement of worn or defective components, lubrication, cleaning, and adjusting as required for door operation. Parts and supplies shall be manufacturer's authorized replacement parts and supplies.

1. Perform maintenance service, including emergency callback service, during normal working hours.
2. Include 24-hour-per-day, seven-day-per-week, emergency callback service.

1.5 QUALITY ASSURANCE

A. Installer Qualifications: An entity that employs installers and supervisors who are trained and approved by manufacturer for both installation and maintenance of units required for this Project.

1. Maintenance Proximity: Not more than two hours' normal travel time from Installer's place of business to Project site.

PART 2 - PRODUCTS

2.1 COUNTER DOOR ASSEMBLIES – GENERAL

A. Available Manufacturers: Basis of Design Product – Overhead Door Corp. 651 Stainless Steel, Face Mounted Rolling Counter Door. Subject to compliance with requirements, other manufacturers offering products that may be incorporated into the Work include, but are not limited to, the following:

1. Clopay Building Products Company, Inc.
2. Wayne-Dalton Corp.
3. Cornell Door Company
4. Raynor.

B. Source Limitations: Obtain all components of coiling counter doors, grilles and coiling overhead doors, from a single source, and from a single manufacturer.

C. Operation Cycles: Door components and operators capable of operating for not less than 10,000. One operation cycle is complete when a door is opened from the closed position to the fully open position and returned to the closed position.

2.2 COUNTER DOORS

A. Door Curtain Material: Stainless steel.

B. Door Curtain Slats: Flat profile slats of 1-1/4-inch center-to-center height.

C. Bottom Bar: Manufacturer's standard continuous channel or tubular shape, fabricated stainless steel and finished to match door.

D. Curtain Jamb Guides: Stainless steel with exposed finish matching curtain slats. Provide continuous integral wear strips to prevent metal-to-metal contact and to minimize operational noise.

E. Manual Door Operation: Push-up operation.

F. Hood: Match curtain material and finish.

1. Shape: Square, unless otherwise indicated.
2. Mounting: As shown on Drawings.

G. Sill Configuration: Prefabricated stainless-steel sill and soiled dish table by others.

H. Locking Devices: Equip door with locking device assembly.

1. Locking Device Assembly: Cremone type, both jamb sides locking bars, operable from inside with thumb turn.

I. Curtain Accessories: Equip door with push/pull handles.

J. Door Finish:

1. Stainless-Steel Finish: No. 4 (polished directional satin). Finish shall apply to both slat faces.

2.3 DOOR CURTAIN MATERIALS AND CONSTRUCTION

A. Door Curtains: Fabricate coiling counter-door curtain of interlocking metal slats in a continuous length for width of door without splices. Unless otherwise indicated, provide slats of thickness and mechanical properties recommended by door manufacturer for performance, size, and type of door indicated, and as follows:

1. Stainless-Steel Door Curtain Slats: ASTM A666, Type 304; sheet thickness of 0.025 inch; and as required. Provide at both interior and exterior curtain-slat faces.

B. Curtain Jamb Guides: Manufacturer's standard angles or channels and angles of same material and finish as curtain slats unless otherwise indicated, with sufficient depth and strength to retain

curtain, to allow curtain to operate smoothly, and to withstand loading. Slot bolt holes for guide adjustment. Provide removable stops on guides to prevent overtravel of curtain.

1. Removable Posts and Jamb Guides: Manufacturer's standard.

2.4 HOODS

A. General: Form sheet metal hood to entirely enclose coiled curtain and operating mechanism at opening head. Contour to fit end brackets to which hood is attached. Roll and reinforce top and bottom edges for stiffness. Form closed ends for surface-mounted hoods. Equip hood with intermediate support brackets as required to prevent sagging.

1. Stainless Steel: 0.025-inch-thick stainless-steel sheet, Type 304, complying with ASTM A 666.

2.5 LOCKING DEVICES

A. Slide Bolt: Fabricate with side-locking bolts to engage through slots in tracks for locking by padlock, located on both left and right jamb sides, operable from coil side.

2.6 CURTAIN ACCESSORIES

A. Astragal: Equip each door bottom bar with a replaceable, adjustable, continuous, compressible gasket of flexible vinyl, rubber, or neoprene as a cushion bumper.

B. Push/Pull Handles: Equip each push-up-operated or emergency-operated door with lifting handles on each side of door, finished to match door.

2.7 COUNTERBALANCING MECHANISM

A. General: Counterbalance doors by means of manufacturer's standard mechanism with an adjustable-tension, steel helical torsion spring mounted around a steel shaft and contained in a spring barrel connected to top of curtain with barrel rings. Use grease-sealed bearings or self-lubricating graphite bearings for rotating members.

B. Counterbalance Barrel: Fabricate spring barrel of manufacturer's standard hot-formed, structural-quality, seamless or welded carbon-steel pipe, of sufficient diameter and wall thickness to support rolled-up curtain without distortion of slats and to limit barrel deflection to not more than 0.03 in./ft. of span under full load.

C. Counterbalance Spring: One or more oil-tempered, heat-treated steel helical torsion springs. Size springs to counterbalance weight of curtain, with uniform adjustment accessible from outside barrel. Secure ends of springs to barrel and shaft with cast-steel barrel plugs.

D. Torsion Rod for Counterbalance Shaft: Fabricate of manufacturer's standard cold-rolled steel, sized to hold fixed spring ends and carry torsional load.

E. Brackets: Manufacturer's standard mounting brackets of either cast iron or cold-rolled steel plate.

2.8 MANUAL DOOR OPERATORS

A. General: Equip door with manual door operator by door manufacturer.

B. Push-up Door Operation: Design counterbalance mechanism so that required lift or pull for door operation does not exceed 25 lbf.

2.9 GENERAL FINISH REQUIREMENTS

A. Comply with NAAMM/NOMMA's "Metal Finishes Manual for Architectural and Metal Products (AMP 500-06)" for recommendations for applying and designating finishes.

B. Appearance of Finished Work: Noticeable variations in same piece are not acceptable. Variations in appearance of adjoining components are acceptable if they are within the range of approved Samples and are assembled or installed to minimize contrast.

2.10 STAINLESS-STEEL FINISHES

A. Surface Preparation: Remove tool and die marks and stretch lines, or blend into finish.

B. Polished Finishes: Grind and polish surfaces to produce uniform finish, free of cross scratches.

1. Run grain of directional finishes with long dimension of each piece.
2. When polishing is completed, passivate and rinse surfaces. Remove embedded foreign matter and leave surfaces chemically clean.
3. Directional Satin Finish: No. 4.

PART 3 - EXECUTION

3.1 EXAMINATION

A. Examine substrates areas and conditions, with Installer present, for compliance with requirements for substrate construction and other conditions affecting performance of the Work.

B. Proceed with installation only after unsatisfactory conditions have been corrected.

3.2 INSTALLATION

A. Install coiling counter doors and operating equipment complete with necessary hardware, anchors, inserts, hangers, and equipment supports; according to manufacturer's written instructions and as specified.

B. Install coiling counter doors, hoods, controls, and operators at the mounting locations indicated for each door.

3.3 ADJUSTING

A. Adjust hardware and moving parts to function smoothly so that doors operate easily, free of warp, twist, or distortion.

B. Lubricate bearings and sliding parts as recommended by manufacturer.

C. Adjust seals to provide tight fit around entire perimeter.

3.4 DEMONSTRATION

A. Engage a factory-authorized service representative to train Owner's maintenance personnel to adjust, operate, and maintain coiling counter doors.

END OF SECTION 083313

SECTION 083323 - OVERHEAD COILING DOORS

PART 1 - GENERAL

1.1 RELATED DOCUMENTS

A. Drawings and general provisions of the Contract, including General and Supplementary Conditions and Division 01 Specification Sections, apply to this Section.

1.2 SUMMARY

A. Section Includes:
   1. Insulated service doors.

B. Related Requirements:
   1. Division 5 Section "Metal Fabrications" for miscellaneous steel supports.
   2. Division 8 Section “Door Hardware” for key-operated control stations, mortise cylinders and door position switches required for electric-operated coiling doors.
   3. Division 26 Electrical Sections for electrical service and connections for powered operators and accessories.

1.3 ACTION SUBMITTALS

A. Product Data: For each type and size of overhead coiling door and accessory.
   1. Include construction details, material descriptions, dimensions of individual components, profiles for slats, and finishes.
   2. Include rated capacities, operating characteristics, electrical characteristics, and furnished accessories.
   3. Include description of automatic closing device and testing and resetting instructions.

B. Shop Drawings: For each installation and for special components not dimensioned or detailed in manufacturer's product data.
   1. Include plans, elevations, sections, and mounting details.
   2. Include details of equipment assemblies, and indicate dimensions, required clearances, method of field assembly, components, and location and size of each field connection.
   3. Include points of attachment and their corresponding static and dynamic loads imposed on structure.
   4. For exterior components, include details of provisions for assembly expansion and contraction and for excluding and draining moisture to the exterior.
   5. Show locations of controls, locking devices, detectors or replaceable fusible links, and other accessories.
   6. Include diagrams for power, signal, and control wiring.

C. Samples for Initial Selection: Manufacturer's finish charts showing full range of colors and textures available for units with factory-applied finishes.

1. Include similar Samples of accessories involving color selection.

1.4 INFORMATIONAL SUBMITTALS

A. Qualification Data: For Installer.

1.5 CLOSEOUT SUBMITTALS

A. Maintenance Data: For overhead coiling doors to include in maintenance manuals.

1.6 QUALITY ASSURANCE

A. Installer Qualifications: An entity that employs installers and supervisors who are trained and approved by manufacturer for both installation and maintenance of units required for this Project.

B. Fire-Rated Door Assemblies: Assemblies complying with NFPA 80 that are listed and labeled by a qualified testing agency, for fire-protection ratings indicated, based on testing at as close to neutral pressure as possible according to NFPA 252 or UL 10B.

1. Oversize Fire-Rated Door Assemblies: For units exceeding sizes of tested assemblies, provide certification by a qualified testing agency that doors comply with standard construction requirements for tested and labeled fire-rated door assemblies except for size.
2. Temperature-Rise Limit: At exit enclosures and exit passageways, provide doors that have a maximum transmitted temperature end point of not more than 450 deg F above ambient after 30 minutes of standard fire-test exposure.
3. Smoke Control: Where indicated and/or in corridors and smoke barriers, provide doors that are listed and labeled with the letter "S" on the fire-rating label by a qualified testing agency for smoke- and draft-control based on testing according to UL 1784; with maximum air-leakage rate of 3.0 cfm/sq. ft. of door opening at 0.10-inch wg for both ambient and elevated temperature tests.

C. Regulatory Requirements: Comply with applicable provisions in the U.S. Architectural & Transportation Barriers Compliance Board's ADA-ABA Accessibility Guidelines and ICC A117.1.

PART 2 - PRODUCTS

2.1 MANUFACTURERS, GENERAL

A. Source Limitations: Obtain overhead coiling doors from single source from single manufacturer. Manufacturer of overhead coiling doors, including all components, must also be the manufacturer of coiling counter doors and overhead coiling grilles.

1. Obtain operators and controls from overhead coiling door manufacturer.

B. Basis-of-Design Manufacturer: Subject to compliance with requirements, provide overhead coiling door assemblies manufactured by Overhead Door Corporation, or comparable products by one of the following:

1. C.H.I. Overhead Doors, Inc.
2. Cookson Company, Inc.
3. Cornell Iron Works, Inc.
4. McKeon Door Company.
5. Raynor.
6. Wayne-Dalton Corp.

2.2 PERFORMANCE REQUIREMENTS

A. Structural Performance, Exterior Doors: Capable of withstanding the design wind loads.

1. Design Wind Load: As indicated on Drawings.
2. Testing: According to ASTM E 330.
3. Deflection Limits: Design overhead coiling doors to withstand design wind load without evidencing permanent deformation or disengagement of door components.
4. Operability under Wind Load: Design overhead coiling doors to remain operable under uniform pressure (velocity pressure) of 20 lbf/sq. ft. wind load, acting inward and outward.

B. Operation Cycles: Door components and operators capable of operating for not less than 20,000. One operation cycle is complete when a door is opened from the closed position to the fully open position and returned to the closed position.

1. Include tamperproof cycle counter.

C. STC Rating: Minimum 26 at standard doors and minimum 21 at fire-rated doors (where indicated).

2.3 INSULATED ROLLING SERVICE DOORS

A. Stormtite Insulated Rolling Service Doors: Overhead Door Corporation Model 625.

a. Basis-of-Design Product: Overhead Door Corporation "Model 625 – Stormtite."

1) Includes, but is not limited to, the following doors: B131(Interior) & B132C(Exterior).

2. Curtain: Interlocking roll-formed slats as specified following. Endlocks shall be attached to each end of alternate slats to prevent lateral movement.
   a. Flat profile type F-265i for doors up to 40 feet (12.19 m) wide.
   b. Front slat fabricated of:
      1) 24 gauge galvanized steel.
   c. Back slat fabricated of:

1) **24 gauge galvanized steel.**

d. Slat cavity filled with CFC-free foamed-in-place, polyurethane insulation.

1) **R-Value: 7.7, U-Value: 0.13.**

2) **Sound Rating: STC-21.**

3. Performance:

a. Through Curtain Sound Rating: Sound Rating: STC-28 (STC-30+ with HZ noise generator) as per ASTM E 90.

b. Installed System Sound Rating: STC-21 as per ASTM E 90.

c. U-factor: 0.91 NFRC test report, maximum U-factor of no higher than 1.00.

d. Air Infiltration: Meets ASHRAE 90.1 & IECC 2012/2015 C402.4.3 Air leakage <1.00 cfm/ft2.

4. Slats and Hood Finish:

a. Aluminum: Slats and hood shall be aluminum finished as follows.

1) **Finish: Color as selected by Architect from manufacturer's full range of custom colors.**

5. Weatherseals:

a. Vinyl bottom seal, exterior guide and internal hood seals.

b. Interior guide weatherseal.

c. Lintel weatherseal.

d. Air Infiltration Package, IECC 2012/2015 listed; product to meet C402.4.3 2012 Air leakage <1.00 cfm/ft2.

1) Air infiltration perimeter seal package includes: guide cover, guide cap, dual brush exterior guide seal, 4 inch finned lintel brush seal and vinyl bottom seal.

6. Bottom Bar:

a. Two stainless steel angles minimum thickness 1/8 inch (3 mm) bolted back to back to reinforce curtain in the guides.

7. Guides: Three structural steel angles.

8. Brackets:

a. Stainless steel to support counterbalance, curtain and hood.

9. Finish; Bottom Bar, Guides, Headplate and Brackets:

a. PowderGuard Premium powder coat in black color.

10. Counterbalance: Helical torsion spring type housed in a steel tube or pipe barrel, supporting the curtain with deflection limited to 0.03 inch per foot of span. Counterbalance is adjustable by means of an adjusting tension wheel.

11. Hood: Provide with internal hood baffle weatherseal.

a. Aluminum hood with intermediate supports as required.

12. Electric Motor Operation: Provide UL listed electric operator, size as recommended by manufacturer to move door in either direction at not less than 2/3 foot nor more than 1 foot per second.
    a. Sensing Edge Protection:
        1) Electric sensing edge.
    b. Operator Controls:
        1) Push-button operated control stations with open, close, and stop buttons.
    c. Motor Voltage: 115/230 single phase, 60 Hz.

13. Wind Load Design:
    a. Standard wind load shall be 20 PSF.

14. Operation: Design door assembly, including operator, to operate for not less than 20,000 cycles.

15. Locking:
    a. Chain keeper locks for chain hoist operation.
    b. Interior slide bolt lock for electric operation with interlock switch.
    c. Cylinder lock for electric operation with interlock switch.

16. Wall Mounting Condition:
    a. Face-of-wall mounting.

17. Insulated Vision Lites: Provide with uniformly spaced openings.
    a. Size: 10 inch by 1 inch (254 mm by 25.4 mm)

2.4 MATERIALS, GENERAL

A. Electrical Components, Devices, and Accessories: Listed and labeled as defined in NFPA 70, by a qualified testing agency, and marked for intended location and application.

2.5 DOOR CURTAIN MATERIALS AND CONSTRUCTION

A. Door Curtains: Fabricate overhead coiling-door curtain of interlocking metal slats, designed to withstand wind loading indicated, in a continuous length for width of door without splices. Unless otherwise indicated, provide slats of thickness and mechanical properties recommended by door manufacturer for performance, size, and type of door indicated, and as follows:

1. Steel Door Curtain Slats: Zinc-coated (galvanized), cold-rolled structural steel sheet; complying with ASTM A 653, with G90 zinc coating; nominal sheet thickness 24 gauge (prior to coating), unless otherwise indicated.
2. Insulation: Fill slats for insulated doors with insulation as indicated, complying with maximum flame-spread and smoke-developed indexes of 75 and 450, respectively, according to ASTM E 84 or UL 723. Enclose insulation completely within slat faces.
3. Metal Interior Curtain-Slat Facing: Match metal of exterior curtain-slat face.

B. Curtain Jamb Guides: Manufacturer's standard angles of same material and finish as curtain slats unless otherwise indicated, with sufficient depth and strength to retain curtain, to allow curtain to operate smoothly, and to withstand loading. Slot bolt holes for guide adjustment. Provide removable stops on guides to prevent overtravel of curtain, and a continuous bar for holding windlocks. Removable posts or jamb guides shall be manufacturer's standard.

2.6 HOODS

A. General: Form sheet metal hood to entirely enclose coiled curtain and operating mechanism at opening head. Contour to fit end brackets to which hood is attached. Roll and reinforce top and bottom edges for stiffness. Form closed ends for surface-mounted hoods and fascia for any portion of between-jamb mounting that projects beyond wall face. Equip hood with intermediate support brackets as required to prevent sagging.

1. Galvanized Steel: Minimum nominal 24-gauge, hot-dip galvanized steel sheet with G90 zinc coating, complying with ASTM A 653.
2. Include automatic drop baffle on fire-rated doors to guard against passage of smoke or flame.

2.7 HARDWARE

A. Coordinate placement of keyed control stations, door position switches and other required hardware as prescribed in Division 8 Section "Door Hardware."

2.8 LOCKING DEVICES

A. Slide Bolt: Fabricate with side-locking bolts to engage through slots in tracks for locking by padlock, located on both left and right jamb sides, operable from coil side.

B. Chain Lock Keeper: Suitable for padlock.

C. Safety Interlock Switch: Equip power-operated doors with safety interlock switch to disengage power supply when door is locked.

2.9 CURTAIN ACCESSORIES

A. Smoke Seals: Equip each fire-rated door with replaceable smoke-seal perimeter gaskets or brushes for smoke and draft control as required for door listing and labeling by a qualified testing agency.

B. Weatherseals for Exterior Doors: Equip each exterior door with weather-stripping gaskets fitted to entire exterior perimeter of door for a weather-resistant installation unless otherwise indicated.

1. At door head, use 1/8-inch-thick, replaceable, continuous-sheet baffle secured to inside of hood or field- installed on the header.
2. At door jambs, use replaceable, adjustable, continuous, flexible, 1/8-inch-thick seals of flexible vinyl, rubber, or neoprene.

C. Push/Pull Handles: Equip each push-up-operated or emergency-operated door with lifting handles on each side of door, finished to match door.

D. Automatic-Closing Device for Fire-Rated Doors: Equip each fire-rated door with an automatic-closing device or holder-release mechanism and governor unit complying with NFPA 80 and an easily tested and reset release mechanism. Testing for manually-operated doors shall allow resetting by opening the door without retensioning the counterbalancing mechanism. Release mechanism for motor-operated doors shall allow testing without mechanical release of the door. Automatic-closing device shall be designed for activation by the following:

1. Replaceable fusible links with temperature rise and melting point of 165 deg F interconnected and mounted on both sides of door opening.
2. Manufacturer's standard UL-labeled smoke and heat detector and door-holder-release devices.
3. Building fire-detection, smoke-detection, and -alarm systems.

2.10 COUNTERBALANCING MECHANISM

A. General: Counterbalance doors by means of manufacturer's standard mechanism with an adjustable-tension, steel helical torsion spring mounted around a steel shaft and contained in a spring barrel connected to top of curtain with barrel rings. Use grease-sealed bearings or self-lubricating graphite bearings for rotating members.

B. Counterbalance Barrel: Fabricate spring barrel of manufacturer's standard hot-formed, structural-quality, seamless or welded carbon-steel pipe, of sufficient diameter and wall thickness to support rolled-up curtain without distortion of slats and to limit barrel deflection to not more than 0.03 in./ft. of span under full load.

C. Counterbalance Spring: One or more oil-tempered, heat-treated steel helical torsion springs. Size springs to counterbalance weight of curtain, with uniform adjustment accessible from outside barrel. Secure ends of springs to barrel and shaft with cast-steel barrel plugs.

1. Fire-Rated Doors: Equip with auxiliary counterbalance spring and prevent tension release from main counterbalance spring when automatic closing device operates.

D. Torsion Rod for Counterbalance Shaft: Fabricate of manufacturer's standard cold-rolled steel, sized to hold fixed spring ends and carry torsional load.

E. Brackets: Manufacturer's standard mounting brackets of either cast iron or cold-rolled steel plate.

2.11 MANUAL DOOR OPERATORS

A. General: Equip door with manual door operator by door manufacturer. Applicable to doors only where specifically indicated.

B. Push-up Door Operation: Design counterbalance mechanism so that required lift or pull for door operation does not exceed 25 lbf.

2.12 ELECTRIC DOOR OPERATORS

A. General: Applies to all overhead coiling doors except where otherwise specifically indicated. Electric door operator assembly of size and capacity recommended and provided by door manufacturer for door and operation-cycles requirement specified, with electric motor and factory-prewired motor controls, starter, gear-reduction unit, solenoid-operated brake, clutch, control stations, control devices, integral gearing for locking door, and accessories required for proper operation.

1. Basis-of-Design Product: Overhead Door Corporation “RSX Operator.”
2. Comply with NFPA 70.
3. Control equipment complying with NEMA ICS 1, NEMA ICS 2, and NEMA ICS 6, with NFPA 70 Class 2 control circuit, maximum 24-V ac or dc.

B. Usage Classification: Electric operator and components capable of operating for not less than number of cycles per hour indicated for each door.

C. Door Operator Location(s): Operator location indicated for each door. Whenever possible, operators shall be located above the ceiling, but shall be easily accessible for maintenance and repairs as needed.

1. Top-of-Hood Mounted: Operator is mounted to the right or left door head plate with the operator on top of the door-hood assembly and connected to the door drive shaft with drive chain and sprockets. Headroom is required for this type of mounting.
2. Front-of-Hood Mounted: Operator is mounted to the right or left door head plate with the operator on coil side of the door-hood assembly and connected to the door drive shaft with drive chain and sprockets. Front clearance is required for this type of mounting.

D. Motors: Reversible-type motor with controller (disconnect switch) for motor exposure indicated.

1. Electrical Characteristics:
   a. Phase: 3 phase.
   b. Volts: 208V.
   c. Hertz: 60.
2. Motor Size: 3/4 horsepower, with capability to start, accelerate, and operate door in either direction from any position, at a speed not less than 8 in./sec. and not more than 12 in./sec., without exceeding nameplate ratings or service factor.
3. Operating Controls, Controllers, Disconnect Switches, Wiring Devices, and Wiring: Manufacturer's standard unless otherwise indicated.
4. Coordinate wiring requirements and electrical characteristics of motors and other electrical devices with building electrical system and each location where installed.
5. Warranty: Manufacturer’s standard two-year, 20,000-cycle limited warranty.

E. Limit Switches: Equip each motorized door with adjustable switches interlocked with motor controls and set to automatically stop door at fully opened and fully closed positions.

F. Obstruction Detection Devices: External entrapment protection consisting of indicated automatic safety sensor capable of protecting full width of door opening. For non-fire-rated

doors, activation of device immediately stops and reverses downward door travel. For fire-rated doors, activation delays closing.

1. Pneumatic Sensor Edge: Automatic safety sensor edge, located within astragal mounted to bottom bar. Contact with sensor activates device.

G. Control Station: Keyswitch-activated, three-button control station in fixed location with momentary-contact push-button controls labeled "Open" and "Stop" and sustained- or constant-pressure push-button control labeled "Close." Control station, mortise cylinder and keying as indicated in Division 8 Section “Door Hardware.”

1. Type: Full-guarded, surface-mounted, heavy-duty type, with general-purpose NEMA ICS 6, Type 1 enclosure.

H. Emergency Manual Operation: Equip each electrically powered door with capability for emergency manual operation. Design manual mechanism so required force for door operation does not exceed 25 lbf.

I. Emergency Operation Disconnect Device: Equip operator with hand-operated disconnect mechanism for automatically engaging manual operator and releasing brake for emergency manual operation while disconnecting motor without affecting timing of limit switch. Mount mechanism so it is accessible from floor level. Include interlock device to automatically prevent motor from operating when emergency operator is engaged.

J. Motor Removal: Design operator so motor may be removed without disturbing limit-switch adjustment and without affecting emergency manual operation.

K. Audible and Visual Signals: Audible alarm and visual indicator lights in compliance with regulatory requirements for accessibility.

2.13 GENERAL FINISH REQUIREMENTS

A. Comply with NAAMM/NOMMA's "Metal Finishes Manual for Architectural and Metal Products (AMP 500-06)" for recommendations for applying and designating finishes.

B. Appearance of Finished Work: Noticeable variations in same piece are not acceptable. Variations in appearance of adjoining components are acceptable if they are within the range of approved Samples and are assembled or installed to minimize contrast.

2.14 STEEL AND GALVANIZED-STEEL FINISHES

A. Powder-Coat Finish: Manufacturer's standard powder-coat finish consisting of prime coat and thermosetting topcoat. Comply with coating manufacturer's written instructions for cleaning, pretreatment, application, and minimum dry film thickness. **Baked enamel finishes are not acceptable**.

PART 3 - EXECUTION

3.1 EXAMINATION

A. Examine substrates areas and conditions, with Installer present, for compliance with requirements for substrate construction and other conditions affecting performance of the Work.

B. Examine locations of electrical connections.

C. Proceed with installation only after unsatisfactory conditions have been corrected.

3.2 INSTALLATION

A. Install overhead coiling doors and operating equipment complete with necessary hardware, anchors, inserts, hangers, and equipment supports; according to manufacturer's written instructions and as specified.

B. Install overhead coiling doors, hoods, controls, and operators at the mounting locations indicated for each door.

C. Accessibility: Install overhead coiling doors, switches, and controls along accessible routes in compliance with regulatory requirements for accessibility.

D. Power-Operated Doors: Install according to UL 325.

E. Fire-Rated Doors: Install according to NFPA 80.

F. Smoke-Control Doors: Install according to NFPA 80 and NFPA 105.

3.3 STARTUP SERVICE

A. Engage a factory-authorized service representative to perform startup service.

1. Perform installation and startup checks according to manufacturer's written instructions.
2. Test and adjust controls and safety devices. Replace damaged and malfunctioning controls and equipment.
3. Test door closing when activated by detector or alarm-connected fire-release system. Reset door-closing mechanism after successful test.

3.4 ADJUSTING

A. Adjust hardware and moving parts to function smoothly so that doors operate easily, free of warp, twist, or distortion.

1. Adjust exterior doors and components to be weather-resistant.

B. Lubricate bearings and sliding parts as recommended by manufacturer.

C. Adjust seals to provide tight fit around entire perimeter.

3.5 MAINTENANCE SERVICE

A. Initial Maintenance Service: Beginning at Substantial Completion, maintenance service shall include 12 months' full maintenance by skilled employees of coiling-door Installer. Include quarterly preventive maintenance, repair or replacement of worn or defective components, lubrication, cleaning, and adjusting as required for door operation. Parts and supplies shall be manufacturer's authorized replacement parts and supplies.

1. Perform maintenance, including emergency callback service, during normal working hours.
2. Include 24-hour-per-day, seven-day-per-week, emergency callback service.

3.6 DEMONSTRATION

A. Engage a factory-authorized service representative to train Owner's maintenance personnel to adjust, operate, and maintain overhead coiling doors.

END OF SECTION 083323

SECTION 084113 - ALUMINUM-FRAMED ENTRANCES AND STOREFRONTS

PART 1 - GENERAL

1.1 RELATED DOCUMENTS

A. Drawings and general provisions of the Contract, including General and Supplementary Conditions and Division 1 Specification Sections, apply to this Section.

1.2 SUMMARY

A. This section includes the following:

1. Exterior storefront framing systems.
2. Interior entrance systems.
3. Manual-swing aluminum doors.

B. Related sections include the following:

C.

1. Division 4 Section “Unit Masonry (Assemblies)” for mockup requirements to include aluminum framed storefront systems.
2. Division 7 Section “Joint Sealants” for joint sealants installed as part of aluminum entrance and storefront systems.
3. Division 8 Section “Glazed Aluminum Curtain Walls”.
4. Division 8 Section “General Glazing” for glazing in aluminum-framed storefront systems.
5. Division 8 Section “Door Hardware” for door hardware installed in aluminum door and frame assemblies.
6. Divisions 26 through 28 Electrical Sections for power wiring and low voltage requirements for electrified hardware.

1.3 SYSTEM DESCRIPTION

A. General: Provide aluminum entrance and storefront systems capable of withstanding loads and thermal and structural movement requirements indicated without failure, based on testing manufacturer’s standard units in assemblies similar to those indicated for this Project. Failure includes the following:

1. Air infiltration and water penetration exceeding specified limits.
2. Framing members transferring stresses, including those caused by thermal and structural movement, to glazing units.

B. Glazing: Physically and thermally isolate glazing from framing members.

C. Thermally Broken Construction: Provide aluminum-framed entrance systems that isolate aluminum exposed to exterior from aluminum exposed to interior with a material of low thermal conductance.

1.4 PREINSTALLATION MEETINGS

A. Pre-installation Conference: Conduct conference at Project site in compliance with Division 1 Section "Project Meetings".

1. The Pre-installation Conference shall include representatives of the Owner's access control and security vendors. Prior to proceeding with the Work, the Contractor shall coordinate all equipment and rough-in requirements with these Owner vendors to ensure all required pathways, junction boxes, etc., are installed correctly.

1.5 SUBMITTALS

A. Product Data: For each product specified. Include details of construction relative to materials, dimensions of individual components, profiles, and finishes.

B. Energy Performance Certificates: For aluminum-framed entrances and storefronts, accessories, and components, from manufacturer.

1. Basis for Certification: NFRC-certified energy performance values for each aluminum-framed entrance and storefront.

C. Product Test Reports: For aluminum-framed entrances and storefronts, for tests performed by manufacturer and witnessed by a qualified testing agency evidencing compliance with requirements.

D. Shop Drawings: For aluminum-framed entrance and storefront systems. Show details of fabrication and installation, including plans, elevations, sections, details of components, provisions for expansion and contraction, and attachments to other work and the following:

1. Layout and installation details, including anchors.
2. Elevations at 1/4 inch = 1 foot, and window unit elevations at 3/4 inch = 1 foot scale.
3. Full-size section details of typical composite members, including reinforcement and stiffeners.
4. Details for flashing and drainage.
5. Location of weep holes.
6. Hardware, including operators.
7. Glazing details.
8. Accessories.
9. **<u>Include point-to-point wiring diagrams showing the following:</u>**

a. Power requirements for each electrically operated door hardware component.
b. Location and types of switches, signal device, conduit sizes, and number and size of wires.

E. Cutaway Sample: For each type of vertical-to-horizontal framing intersection of systems made from minimum 6 inch lengths of full-size components, and showing details of the following:

1. Joinery.
2. Anchorage.
3. Expansion provisions.
4. Glazing.
5. Flashing and drainage.
6. Structural sealant joints.

F. Samples for Verification: For each type of exposed finish required, in manufacturer's standard sizes.

G. Sealant Compatibility and Adhesion Test Reports: From sealant manufacturer, indicating that materials forming joint substrates and joint-sealant backings have been tested for compatibility and adhesion with sealants; include joint sealant manufacturers' written interpretation of test results relative to sealant performance and recommendations for primers and substrate preparation needed to obtain adhesion.

H. Qualification Data: For Installer.

I. Energy Performance Certificates: For aluminum-framed entrances and storefronts, accessories, and components, from manufacturer.

1. Basis for Certification: NFRC-certified energy performance values for each aluminum-framed entrance and storefront.

J. Product Test Reports: Based on evaluation of tests performed by manufacturer and witnessed by a qualified independent testing agency, indicate compliance of entrance and storefront systems with requirements based on comprehensive testing of current systems.

K. Source quality-control reports.

L. Field quality-control reports.

M. Sample Warranties: For special warranties.

N. Maintenance Data: For aluminum-framed entrances and storefronts to include in maintenance manuals.

1.6 PERFORMANCE REQUIREMENTS

A. Delegated Design: Engage a qualified professional engineer, registered in the state in which the project is located, to design aluminum-framed entrances and storefronts.

B. General Performance: Comply with the performance requirements specified, as determined by testing of aluminum-framed entrances and storefronts representing those indicated for this

Project without failure due to defective manufacture, fabrication, installation, or other defects in construction.

1. Aluminum-framed entrances and storefronts shall withstand movements of supporting structure, including, but not limited to, twist, column shortening, long-term creep, and deflection from uniformly distributed and concentrated live loads.
2. Failure also includes the following:

    a. Thermal stresses transferring to building structure.
    b. Glass breakage.
    c. Noise or vibration created by wind and thermal and structural movements.
    d. Loosening or weakening of fasteners, attachments, and other components.
    e. Failure of operating units.

C. Structural Loads:

1. Wind Loads: As indicated on Drawings.
2. Other Design Loads: As indicated on Drawings.

D. Deflection of Framing Members: At design wind pressure, as follows:

1. Deflection Normal to Wall Plane: Limited to edge of glass in a direction perpendicular to glass plane not exceeding 1/175 of the glass edge length for each individual glazing lite, or an amount that restricts edge deflection of individual glazing lites to 3/4 inch, whichever is less.
2. Deflection Parallel to Glazing Plane: Limited to 1/360 of clear span or 1/8 inch, whichever is smaller.

    a. Operable Units: Provide a minimum 1/16-inch clearance between framing members and operable units.

3. Cantilever Deflection: Where framing members overhang an anchor point, as follows:

    a. Perpendicular to Plane of Wall: No greater than 1/240 of clear span plus 1/4 inch for spans greater than 11 feet 8-1/4 inches or 1/175 times span, for spans less than 11 feet 8-1/4 inches.

E. Structural: Test according to ASTM E330 as follows:

1. When tested at positive and negative wind-load design pressures, storefront assemblies, including entrance doors, do not evidence deflection exceeding specified limits.
2. When tested at 150 percent of positive and negative wind-load design pressures, storefront assemblies, including entrance doors and anchorage, do not evidence material failures, structural distress, or permanent deformation of main framing members exceeding 0.2 percent of span.
3. Test Durations: As required by design wind velocity for relevant exposure category, but not less than 10 seconds.

F. Air Infiltration: Test according to ASTM E283 for infiltration as follows:

1. Fixed Framing and Glass Area:

    a. Fixed Framing and Glass Area: Maximum air leakage of 0.06 cfm/sq. ft. at a static-air-pressure differential of 6.24 lbf/sq. ft.

2. Entrance Doors:

    a. Pair of Doors: Maximum air leakage of 1.0 cfm/sq. ft. at a static-air-pressure differential of 1.57 lbf/sq. ft.
    b. Single Doors: Maximum air leakage of 0.5 cfm/sq. ft. at a static-air-pressure differential of 1.57 lbf/sq. ft.

G. Water Penetration under Static Pressure: Test according to ASTM E331 as follows:

1. No evidence of water penetration through fixed glazing and framing areas, including entrance doors, when tested according to a minimum static-air-pressure differential of 20 percent of positive wind-load design pressure, but not less than 6.24 lbf/sq. ft.

H. Water Penetration under Dynamic Pressure: Test according to AAMA 501.1 as follows:

1. No evidence of water penetration through fixed glazing and framing areas when tested at dynamic pressure equal to 20 percent of positive wind-load design pressure, but not less than 6.24 lbf/sq. ft.
2. Maximum Water Leakage: According to AAMA 501.1. No uncontrolled water penetrating assemblies or water appearing on assemblies' normally exposed interior surfaces from sources other than condensation. Water leakage does not include water controlled by flashing and gutters, or water that is drained to exterior.

I. Energy Performance: Certify and label energy performance according to NFRC as follows:

1. Thermal Transmittance (U-factor): Fixed glazing and framing areas as a system shall have U-factor of not more than 0.36 Btu/sq. ft. x h x deg F (using Ucog=0.29), as determined according to NFRC 100.
2. Solar Heat Gain Coefficient (SHGC): Fixed glazing and framing areas as a system shall have SHGC of no greater than 0.35 as determined according to NFRC 200.
3. Condensation Resistance: Fixed glazing and framing areas as a system shall have an NFRC-certified condensation resistance rating of no less than 45 as determined according to NFRC 500.

J. Noise Reduction: Test according to ASTM E90, with ratings determined by ASTM E1332, as follows.

1. Sound Transmission Class: Not less than 32 for 1-inch insulated glazing and 36 for laminated glazing.
2. Outdoor-Indoor Transmission Class: Not less than 27 for 1-inch insulated glazing and 30 for laminated glazing.

K. Thermal Movements: Allow for thermal movements resulting from ambient and surface temperature changes.

1. Temperature Change: 120 deg F, ambient; 180 deg F, material surfaces.
2. Thermal Cycling: No buckling; stress on glass; sealant failure; excess stress on framing, anchors, and fasteners; or reduction of performance when tested according to AAMA 501.5.

    a. High Exterior Ambient-Air Temperature: That which produces an exterior metal-surface temperature of 180 deg F.
    b. Low Exterior Ambient-Air Temperature: 0 deg F.
    c. Interior Ambient-Air Temperature: 75 deg F.

L. Performance Requirements of Operable Units: Testing shall demonstrate compliance with requirements indicated in AAMA 101-03 for air infiltration, water penetration, and structural performance for type, grade, and performance class of operable units required. Where required design pressure exceed the minimum for specified window grade, comply with requirements of AAMA 101, Section 3, “Optional Performance Classes,” for higher than minimum performance class.

1.7 QUALITY ASSURANCE

A. Installer Qualifications: Engage an experienced installer to assume engineering responsibility and perform work of this Section who has specialized in installing entrance and storefront systems similar to those required for this Project and who is acceptable to manufacturer.

1. Engineering Responsibility: Prepare data for entrance and storefront systems, including Shop Drawings, based on testing and engineering analysis of manufacturer's standard units in assemblies similar to those indicated for this Project.

B. Source Limitations: Obtain each component and each type of entrance and storefront system through one source from a single manufacturer.

C. Product Options: Information on Drawings and in Specifications establishes requirements for system's aesthetic effects and performance characteristics. Aesthetic effects are indicated by dimensions, arrangements, alignment, and profiles of components and assemblies as they relate to sight lines and relationships to one another and to adjoining construction. Performance characteristics are indicated by criteria subject to verification by one or more methods including preconstruction testing, field-testing, or in-service performance.

1. Do not modify intended aesthetic effect, as judged solely by Architect, except with Architect's approval and only to the extent needed to comply with performance requirements. Where modifications are proposed, submit comprehensive explanatory data to Architect for review.

D. Welding Standards: Comply with AWS D1.2, "Structural Welding Code - Aluminum.”

1.8 MOCKUPS

A. Mockups: Build mockups to verify selections made under Sample submittals and to demonstrate aesthetic effects and set quality standards for fabrication and installation.

1. Mockup shall be a component of the comprehensive mockup specified in Division 4 Section “Unit Masonry (Assemblies)”.

1.9 PROJECT CONDITIONS

A. Field Measurements: Verify dimensions by field measurements before fabrication and indicate measurements on Shop Drawings. Coordinate fabrication schedule with construction progress to avoid delaying the Work.

1. Established Dimensions: Where field measurements cannot be made without delaying the Work, establish dimensions and proceed with fabricating systems without field measurements. Coordinate construction to ensure actual dimensions correspond to established dimensions.

1.10 WARRANTY

A. General Warranty: The special warranty specified in this Article shall not deprive the Owner of other rights the Owner may have under other provisions of the Contract Documents and shall be in addition to, and run concurrent with, other warranties made by the Contractor under requirements of the Contract Documents.

B. Special Warranty: Submit a written warranty signed by manufacturer agreeing to repair or replace window components that fail in materials or workmanship within the specified warranty period. Failures include, but are not limited to the following:

1. Structural failures including excessive deflection.
2. Failure of system to meet specified performance requirements including water leakage, air infiltration or condensation.
3. Noise or vibration created by wind and thermal and structural movements.
4. Water penetration through fixed glazing and framing areas.
5. Adhesive sealant failures.
6. Cohesive sealant failures.
7. Failure of operating components to function normally.
8. Deterioration of metals, metal finishes, and other materials beyond normal weathering.

C. Warranty Period: 2 years from date of Substantial Completion.

D. Special Finish Warranty, Anodized Finishes: Standard form in which manufacturer agrees to repair finishes or replace aluminum that shows evidence of deterioration of anodized finishes within specified warranty period.

1. Deterioration includes, but is not limited to, the following:

a. Color fading more than 5 Delta E units when tested according to ASTM D 2244.
b. Chalking in excess of a No. 8 rating when tested according to ASTM D 4214.
c. Cracking, peeling, or chipping.

2. Warranty Period: Ten (10) years from date of Substantial Completion.

PART 2 - PRODUCTS

2.1 MANUFACTURERS

A. Available Manufacturers: Basis of Design Products are by YKK AP America, Inc. Subject to compliance with requirements, other manufacturers offering products that may be incorporated into the Work include, but are not limited to, the following:

1. Kawneer North America.
2. EFCO Corporation.
3. Oldcastle Building Envelope (formerly Vistawall Architectural Products).

B. Source Limitations: Obtain all components of aluminum-framed entrance and storefront systems as well as glazed aluminum curtain wall systems, including operable units and accessories, from the same manufacturer.

C. Storefront Framing Products:

1. Thermally Broken 2-inch x 4-1/2-inch Storefront Systems: YES 45 TU (center set, flush glazed storefront system for insulated glass).

a. For use generally at exterior storefront locations. Where removable mullions are a component of the hardware set for thermally broken (2-3/8-inch thick) entrance doors, 6-inch storefront systems are required.

2. Thermally Broken 2-inch x 6-inch Storefront Systems: YES 60 FI (center set, flush glazed storefront system for insulated glass).

a. For use generally at exterior storefront locations where the use of thermally broken (2-3/8-inch thick) doors AND removable mullions are a component of the assembly, and also where noted on Drawings or where required by wind loads against the overall frame.

3. Non-Thermally Broken 1-3/4-inch x 4-1/2-inch Storefront Systems: YES 45 FS (center set, flush glazed storefront system for monolithic glass).

a. For use at interior locations where noted on Drawings.

2.2 MATERIALS

A. Aluminum: Alloy and temper recommended by manufacturer for type of use and finish indicated, complying with the requirements of standards indicated below:

1. Sheet and Plate: ASTM B209.
2. Extruded Bars, Rods, Shapes, and Tubes: ASTM B221.
3. Extruded Structural Pipe and Tubes: ASTM B429.
4. Structural Profiles: ASTM B308
5. Bars, Rods, and Wire: ASTM B211.

6. Welding Rods and Bare Electrodes: AWS A5.10.

B. Steel Reinforcement:

1. Structural Shapes, Plates, and Bars: ASTM A36.
2. Cold-Rolled Sheet and Strip: ASTM A1008.
3. Hot-Rolled Sheet and Strip: ASTM A1011.

C. Steel Reinforcement Primer: Manufacturer's standard zinc-rich, corrosion-resistant primer complying with SSPC-PS Guide No. 12.00; applied immediately after surface preparation and pretreatment. Select surface preparation methods according to recommendations in SSPC-SP COM, and prepare surfaces according to applicable SSPC standard.

D. Glazing: Refer to Division 8 Section “General Glazing”.

E. Glazing Gaskets: Manufacturer’s standard pressure-glazing system of black, resilient glazing gaskets, setting blocks, and shims or spacers, fabricated from an elastomer of type and in hardness recommended by system and gasket manufacturer to comply with system performance requirements. Provide gasket assemblies that have corners sealed with sealant recommended by gasket manufacturer.

F. Spacers, Setting Blocks, Gaskets, and Bond Breakers: Manufacturer’s standard permanent, non-migrating types in hardness recommended by manufacturer, compatible with sealants, and suitable for system performance requirements.

G. Framing system gaskets, sealants, and joint fillers as recommended by manufacturer for joint type.

H. Compression-Type Glazing Strips and Weatherstripping: Unless otherwise indicated, and at manufacturer’s option, provide compressible stripping for glazing and weatherstripping such a molded EPDM or neoprene gaskets complying with ASTM D2000 Designation 2C415 to 3BC620, or molded PVC gaskets complying with ASTM D2287, or molded expanded EPDM or neoprene gaskets complying with ASTM C509, Grade 4.

I. Bituminous Paint: Cold-applied asphalt-mastic paint complying with SSPC-Paint 12 requirements except containing no asbestos, formulated for 30-mil thickness per coat.

2.3 COMPONENTS

A. Framing Components: Provide manufacturer's standard components complying with specified requirements.

B. Brackets and Reinforcements: Provide manufacturer’s standard brackets and reinforcements that are compatible with adjacent materials. Provide non-staining, nonferrous shims for aligning system components.

C. Backer Plates: Manufacturer's standard, continuous backer plates for framing members, if not integral, where framing abuts adjacent construction.

D. Fasteners and Accessories: Manufacturer's standard corrosion-resistant, non-staining, nonbleeding fasteners and accessories compatible with adjacent materials.

1. Reinforce members as required to retain fastener threads.
2. Use self-locking devices where fasteners are subject to loosening or turning out from thermal and structural movements, wind loads, or vibration.
3. Do not use exposed fasteners, except for hardware application. For hardware application, use countersunk Phillips flat-head machine screws finished to match framing members or hardware being fastened, unless otherwise indicated.

E. Anchors: Three-way adjustable anchors with minimum adjustment of 1 inch accommodate fabrication and installation tolerances in material and finish compatible with adjoining materials and recommended by manufacturer.

1. Concrete and Masonry Inserts: Hot-dip galvanized cast-iron, malleable-iron, or steel inserts complying with ASTM A123 or ASTM A153 requirements.

F. Concealed Flashing: Manufacturer's standard corrosion-resistant, non-staining, nonbleeding flashing, compatible with adjacent materials and of type recommended by manufacturer.

G. Weather Stripping: Manufacturer's standard replaceable weather stripping as follows:

1. Compression Weather Stripping: Molded neoprene complying with ASTM D2000 requirements or molded PVC complying with ASTM D2287 requirements.
2. Sliding Type: AAMA 701/702, made of wool, polypropylene, or nylon woven pile with nylon-fabric or aluminum-strip backing.

2.4 DOORS

A. Doors: Basis of Design Products; YKK AP America, Inc. – 50XT Wide Stile Door (thermally broken doors), and 50D Wide Stile Door (non-thermally broken). As scheduled, thermally broken doors shall be used at all exterior locations. Non-thermally broken doors shall be used at all interior locations.

1. Thermally Broken Door Construction: 2-3/8-inch overall thickness, with nominal 1/8-inch thick, extruded-aluminum tubular rail and stile members. Mechanically fasten corners with reinforcing brackets that are deep penetration and fillet welded.
2. Non-Thermally Broken Door Construction: 1-3/4-inch overall thickness, with nominal 1/8-inch thick, extruded aluminum tubular rail and stile members. Mechanically fasten corners with reinforcing brackets that are deep penetration and fillet welded.
3. Door Design: Wide stile (all doors).

a. Stile Width: 5 inches.
b. Top Rail: 6-1/2 inches.
c. Mid Rail: 6-1/2 inches.
d. Bottom Rail: 10 inches

1) Verify stile and rail dimensions indicated for entrance doors will properly accommodate and conceal prescribed hardware components, including, but not limited to, exit devices and closers. Report any discrepancies to the Architect.

4. Glazing Stops and Gaskets: Beveled, snap-on, extruded-aluminum stops and preformed gaskets.

   a. Provide non-removable glazing stops on outside of door.

B. Door Hardware: As specified in Division 8 Section “Door Hardware”.

2.5 VENTING WINDOWS

A. Aluminum Windows: Basis-of-Design Product - YKK AP America, Inc., YES SSG Vent, manufacturer's standard narrow profile, operable vent units, complying with AAMA/WDMA/CSA 101/I.S.2/A440-08.

1. Window Type: Awning/Project-Out configuration.
2. Minimum Performance Class: AW.
3. Minimum Performance Grade: 65.
4. Aluminum Extrusions: ASTM B221, alloy and temper recommended by manufacturer for strength, corrosion resistance, and application of required finish, but not less than 0.064-inch thickness at any location for main frame and sash members.

   a. Thermally Improved Construction: Fabricate window units with an integral, concealed, low-conductance thermal barrier; located between exterior materials and window members exposed on interior side; in a manner that eliminates direct metal-to-metal contact.

5. Mullions: Between adjacent windows, fabricated of extruded aluminum matching finish of window units.
6. Fasteners, Anchors, and Clips: AISA 300-series (400-series for self-drilling); nonmagnetic stainless steel, or other noncorrosive material, compatible with aluminum window members, trim, hardware, anchors, and other components of window units. Fasteners shall not be exposed, except for attaching hardware.

   a. Reinforcement: Where fasteners screw-anchor into aluminum less than 0.128 inch thick, reinforce interior with nonmagnetic stainless steel to receive screw threads, or provide standard, noncorrosive, pressed-in, spline grommet nuts.

7. Hardware: Manufacturer's standard stainless steel, steel and bronze, including the following:

   a. Hinges: Stainless steel, 4-bar type.
   b. Cam-action handles and strikes: White bronze.
   c. Steel or bronze operating arms.

8. Sliding-Type Weather Stripping: Woven-pile weather stripping of wool, polypropylene, or nylon pile and resin-impregnated backing fabric; complying with AAMA 701/702.
9. Insect Screens: Provide removable insect screen on each operable exterior sash, with operable wicket for venting handle access, and with screen frame finished to match window unit, complying with SMA 1004 or SMA 1201, and as follows:

    a. Aluminum Wire Fabric: 18-by-18, 18-by-16, or 18-by-14 mesh of 0.013-inch-diameter, coated aluminum wire.

B. Glazing: Same as adjacent aluminum-framed entrances and storefront glazing.

2.6 FABRICATION

A. General: Fabricate components that, when assembled, will have accurately fitted joints with ends coped or mitered to produce hairline joints free of burrs and distortion. After fabrication, clearly mark components to identify their locations in Project according to Shop Drawings.

1. Fabricate components for screw-spline frame construction.
2. Fabricate components for head and sill-receptor frame construction with shear-block construction at intermediate horizontal components.

B. Forming: Form shapes with sharp profiles, straight and free of defects or deformations, before finishing.

C. Prepare components to receive concealed fasteners and anchor and connection devices.

D. Fabricate components to drain water passing joints and condensation and moisture occurring or migrating within the system to the exterior.

E. Welding: Weld components to comply with referenced AWS standard. Weld before finishing components to greatest extent possible. Weld in concealed locations to greatest extent possible to minimize distortion or discoloration of finish. Remove weld spatter and welding oxides from exposed surfaces by descaling or grinding.

F. Glazing Channels: Provide minimum clearances for thickness and type of glass indicated according to FGMA's "Glazing Manual."

G. Metal Protection: Where aluminum will contact dissimilar metals, protect against galvanic action by painting contact surfaces with primer or by applying sealant or tape recommended by manufacturer for this purpose. Where aluminum will contact concrete or masonry, protect against corrosion by painting contact surfaces with bituminous paint.

H. Storefront: Fabricate framing in profiles indicated for flush glazing (without projecting stops). Provide subframes and reinforcing of types indicated or, if not indicated, as required for a complete system. Factory assemble components to greatest extent possible. Disassemble components only as necessary for shipment and installation. Provide ventilator units where detailed on Drawings.

I. Entrances: Fabricate door framing in profiles indicated. Reinforce as required to support imposed loads. Factory assemble door and frame units and factory install hardware to greatest extent possible. Reinforce door and frame units as required for installing hardware indicated. Cut, drill, and tap for factory-installed hardware before finishing components.

1. Exterior Doors: Provide compression weather stripping at fixed stops. At other locations, provide sliding weather stripping retained in adjustable strip mortised into door edge.
2. Interior Doors: Provide ANSI/BHMA A156.16 silencers at stops to prevent metal to metal contact. Provide 3 silencers on strike jamb of single-door frames and 2 silencers on head of double-door frames

2.7 ALUMINUM FINISHES

A. General: Comply with NAAMM's "Metal Finishes Manual for Architectural and Metal Products" for recommendations relative to applying and designating finishes.

B. Appearance of Finished Work: Variations in appearance of abutting or adjacent pieces are acceptable if they are within one-half of the range of approved Samples. Noticeable variations in the same piece are not acceptable. Variations in appearance of other components are acceptable if they are within the range of approved Samples and are assembled or installed to minimize contrast.

C. Finish designations prefixed by AA conform to the system established by the Aluminum Association for designating aluminum finishes.

D. Finish: AAMA 612-02 Combined Coatings, Class 1, Clear Anodic Finish. Coating thickness of no less than .7 mill (18 microns).

1. Color must match glazed-aluminum curtain wall framing, along with various types of sheet metal flashing and trim, to the greatest extent possible.
2. Color uniformity shall not differ more than 5 Hunter units, in accordance with ASTM D2244.
3. Gloss retention shall not exceed 50% change following ASTM D523.
4. Chalk Resistance shall not exceed a Number 8 rating, based on ASTM D4214.

2.8 STEEL PRIMING

A. General: Comply with NAAMM's "Metal Finishes Manual for Architectural and Metal Products" for recommendations relative to applying primer.

B. Surface Preparation: Perform manufacturer's standard cleaning operations to remove dirt, oil, grease, or other contaminants that could impair paint bond. Remove mill scale and rust, if present, from uncoated steel.

C. Priming: Apply manufacturer's standard corrosion-resistant primer immediately after surface preparation and pretreatment.

PART 3 - EXECUTION

3.1 EXAMINATION

A. Examine areas with Installer present, for compliance with requirements for installation tolerances and other conditions affecting performance of entrance and storefront systems. Do not proceed with installation until unsatisfactory conditions have been corrected.

3.2 INSTALLATION

A. General: Comply with manufacturer's written instructions for protecting, handling, and installing entrance and storefront systems. Do not install damaged components. Fit frame joints to produce hairline joints free of burrs and distortion. Rigidly secure non-movement joints. Seal joints watertight.

B. Metal Protection: Where aluminum will contact dissimilar metals, protect against galvanic action by painting contact surfaces with primer or by applying sealant or tape recommended by manufacturer for this purpose. Where aluminum will contact concrete or masonry, protect against corrosion by painting contact surfaces with bituminous paint.

C. Install components to drain water passing joints and condensation and moisture occurring or migrating within the system to the exterior.

D. Set continuous sill members and flashing in a full sealant bed to provide weathertight construction, unless otherwise indicated. Comply with requirements of Division 7 Section "Joint Sealants."

E. Install framing components plumb and true in alignment with established lines and grades without warp or rack of framing members.

F. Install operable units level and plumb, securely anchored, and without distortion. Adjust weather-stripping contact and hardware movement to produce proper operation.

G. Install entrances plumb and true in alignment with established lines and grades without warp or rack. Lubricate operating hardware and other moving parts according to hardware manufacturers' written instructions.

1. Install surface-mounted hardware according to manufacturer's written instructions using concealed fasteners to greatest extent possible.

H. Install secondary-sealant weatherseal according to sealant manufacturer's written instructions to provide weatherproof joints. Install joint fillers behind sealant as recommended by sealant manufacturer.

I. Install perimeter sealant to comply with requirements of Division 7 Section "Joint Sealants," unless otherwise indicated.

J. Erection Tolerances: Install entrance and storefront systems to comply with the following maximum tolerances:

1. Variation from Plane: Limit variation from plane or location shown to 1/8 inch in 10 feet; 1/4 inch over total length.
2. Alignment: Where surfaces abut in line, limit offset from true alignment to 1/16 inch. Where surfaces meet at corners, limit offset from true alignment to 1/32 inch.
3. Diagonal Measurements: Limit difference between diagonal measurements to 1/8 inch.

3.3 ADJUSTING AND CLEANING*

A. Adjust doors and hardware to provide tight fit at contact points and weather stripping, smooth operation, and weathertight closure.

B. Remove excess sealant and glazing compounds, and dirt from surfaces.

3.4 PROTECTION

A. Provide final protection and maintain conditions, in a manner acceptable to manufacturer and Installer, that ensure entrance and storefront systems are without damage or deterioration at the time of Substantial Completion.

END OF SECTION 084113

SECTION 087100 - DOOR HARDWARE

PART 1 - GENERAL

1.1 SUMMARY

A. Section includes:

1. Mechanical and electrified door hardware
2. Electronic access control system components

B. Section excludes:

1. Windows
2. Cabinets (casework), including locks in cabinets
3. Signage
4. Toilet accessories
5. Overhead doors

C. Related Sections:

1. Division 01 "General Requirements" sections for Allowances, Alternates, Owner Furnished Contractor Installed, Project Management and Coordination.
2. Division 06 Section ''Rough Carpentry''
3. Division 06 Section ''Finish Carpentry''
4. Division 07 Section ''Joint Sealants'' for sealant requirements applicable to threshold installation specified in this section.
5. Division 08 Sections:
   a. ''Metal Doors and Frames''
   b. ''Flush Wood Doors''
   c. ''Stile and Rail Wood Doors''
   d. ''Interior Aluminum Doors and Frames''
   e. ''Aluminum-Framed Entrances and Storefronts''
   f. ''Stainless Steel Doors and Frames''
   g. ''Special Function Doors''
   h. ''Entrances''
6. Division 26 ''Electrical'' sections for connections to electrical power system and for low-voltage wiring.
7. Division 28 ''Electronic Safety and Security'' sections for coordination with other components of electronic access control system and fire alarm system.

1.2 REFERENCES

A. UL LLC

1. UL 10B - Fire Test of Door Assemblies

2. UL 10C - Positive Pressure Test of Fire Door Assemblies
3. UL 1784 - Air Leakage Tests of Door Assemblies
4. UL 305 - Panic Hardware

B. DHI - Door and Hardware Institute

1. Sequence and Format for the Hardware Schedule
2. Recommended Locations for Builders Hardware
3. Keying Systems and Nomenclature
4. Installation Guide for Doors and Hardware

C. NFPA – National Fire Protection Association

1. NFPA 70 – National Electric Code
2. NFPA 80 – 2016 Edition – Standard for Fire Doors and Other Opening Protectives
3. NFPA 101 – Life Safety Code
4. NFPA 105 – Smoke and Draft Control Door Assemblies
5. NFPA 252 – Fire Tests of Door Assemblies

D. ANSI - American National Standards Institute

1. ANSI A117.1 – 2017 Edition – Accessible and Usable Buildings and Facilities
2. ANSI/BHMA A156.1 - A156.29, and ANSI/BHMA A156.31 - Standards for Hardware and Specialties
3. ANSI/BHMA A156.28 - Recommended Practices for Keying Systems
4. ANSI/WDMA I.S. 1A - Interior Architectural Wood Flush Doors
5. ANSI/SDI A250.8 - Standard Steel Doors and Frames

1.3 SUBMITTALS

A. General:

1. Submit in accordance with Conditions of Contract and Division 01 Submittal Procedures.
2. Prior to forwarding submittal:
   a. Review drawings and Sections from related trades to verify compatibility with specified hardware.
   b. Highlight, encircle, or otherwise specifically identify on submittals: deviations from Contract Documents, issues of incompatibility or other issues which may detrimentally affect the Work.

B. Action Submittals:

1. Product Data: Submit technical product data for each item of door hardware, installation instructions, maintenance of operating parts and finish, and other information necessary to show compliance with requirements.
2. Riser and Wiring Diagrams: After final approval of hardware schedule, submit details of electrified door hardware, indicating:
   a. Wiring Diagrams: For power, signal, and control wiring and including:

1) Details of interface of electrified door hardware and building safety and security systems.
2) Schematic diagram of systems that interface with electrified door hardware.
3) Point-to-point wiring.
4) Risers.

3. Samples for Verification: If requested by Architect, submit production sample of requested door hardware unit in finish indicated and tagged with full description for coordination with schedule.
   a. Samples will be returned to supplier. Units that are acceptable to Architect may, after final check of operations, be incorporated into Work, within limitations of key coordination requirements.

4. Door Hardware Schedule:
   a. Submit concurrent with submissions of Product Data, Samples, and Shop Drawings. Coordinate submission of door hardware schedule with scheduling requirements of other work to facilitate fabrication of other work critical in Project construction schedule.
   b. Submit under direct supervision of a Door Hardware Institute (DHI) certified Architectural Hardware Consultant (AHC) or Door Hardware Consultant (DHC) with hardware sets in vertical format as illustrated by Sequence of Format for the Hardware Schedule published by DHI.
   c. Indicate complete designations of each item required for each opening, include:
      1) Door Index: door number, heading number, and Architect's hardware set number.
      2) Quantity, type, style, function, size, and finish of each hardware item.
      3) Name and manufacturer of each item.
      4) Fastenings and other pertinent information.
      5) Location of each hardware set cross-referenced to indications on Drawings.
      6) Explanation of all abbreviations, symbols, and codes contained in schedule.
      7) Mounting locations for hardware.
      8) Door and frame sizes and materials.
      9) Degree of door swing and handing.
      10) Operational Description of openings with electrified hardware covering egress, ingress (access), and fire/smoke alarm connections.

5. Key Schedule:
   a. After Keying Conference, provide keying schedule that includes levels of keying, explanations of key system's function, key symbols used, and door numbers controlled.
   b. Use ANSI/BHMA A156.28 ''Recommended Practices for Keying Systems'' as guideline for nomenclature, definitions, and approach for selecting optimal keying system.
   c. Provide 3 copies of keying schedule for review prepared and detailed in accordance with referenced DHI publication. Include schematic keying diagram and index each key to unique door designations.
   d. Index keying schedule by door number, keyset, hardware heading number, cross keying instructions, and special key stamping instructions.

e. Provide one complete bitting list of key cuts and one key system schematic illustrating system usage and expansion. Forward bitting list, key cuts and key system schematic directly to Owner, by means as directed by Owner.
f. Prepare key schedule by or under supervision of supplier, detailing Owner's final keying instructions for locks.

C. Informational Submittals:

1. Provide Qualification Data for Supplier, Installer and Architectural Hardware Consultant.
2. Provide Product Data:
   a. Certify that door hardware approved for use on types and sizes of labeled fire-rated doors complies with listed fire-rated door assemblies.
   b. Include warranties for specified door hardware.

D. Closeout Submittals:

1. Operations and Maintenance Data: Provide in accordance with Division 01 and include:
   a. Complete information on care, maintenance, and adjustment; data on repair and replacement parts, and information on preservation of finishes.
   b. Catalog pages for each product.
   c. Final approved hardware schedule edited to reflect conditions as installed.
   d. Final keying schedule
   e. Copy of warranties including appropriate reference numbers for manufacturers to identify project.
   f. As-installed wiring diagrams for each opening connected to power, both low voltage and 110 volts.

E. Inspection and Testing:

1. Submit written reports to the Owner and Authority Having Jurisdiction (AHJ) of the results of functional testing and inspection for:
   a. Fire door assemblies, in compliance with NFPA 80.
   b. Required egress door assemblies, in compliance with NFPA 101.

1.4 QUALITY ASSURANCE

A. Qualifications and Responsibilities:

1. Supplier: Recognized architectural hardware supplier with a minimum of 5 years documented experience supplying both mechanical and electromechanical door hardware similar in quantity, type, and quality to that indicated for this Project. Supplier to be recognized as a factory direct distributor by the manufacturer of the primary materials with a warehousing facility in the Project's vicinity. Supplier to have on staff, a certified Architectural Hardware Consultant (AHC) or Door Hardware Consultant (DHC) available to Owner, Architect, and Contractor, at reasonable times during the Work for consultation.

2. Installer: Qualified tradesperson skilled in the application of commercial grade hardware with experience installing door hardware similar in quantity, type, and quality as indicated for this Project.
3. Architectural Hardware Consultant: Person who is experienced in providing consulting services for door hardware installations that are comparable in material, design, and extent to that indicated for this Project and meets these requirements:
   a. For door hardware: DHI certified AHC or DHC.
   b. Can provide installation and technical data to Architect and other related subcontractors.
   c. Can inspect and verify components are in working order upon completion of installation.
   d. Capable of producing wiring diagram and coordinating installation of electrified hardware with Architect and electrical engineers.

4. Single Source Responsibility: Obtain each type of door hardware from single manufacturer.

B. Certifications:

1. Fire-Rated Door Openings:
   a. Provide door hardware for fire-rated openings that complies with NFPA 80 and requirements of authorities having jurisdiction.
   b. Provide only items of door hardware that are listed products tested by UL LLC, Intertek Testing Services, or other testing and inspecting organizations acceptable to authorities having jurisdiction for use on types and sizes of doors indicated, based on testing at positive pressure and according to NFPA 252 or UL 10C and in compliance with requirements of fire-rated door and door frame labels.

2. Smoke and Draft Control Door Assemblies:
   a. Provide door hardware that meets requirements of assemblies tested according to UL 1784 and installed in compliance with NFPA 105
   b. Comply with the maximum air leakage of 0.3 cfm/sq. ft. (3 cu. m per minute/sq. m) at tested pressure differential of 0.3-inch wg (75 Pa) of water.

3. Electrified Door Hardware
   a. Listed and labeled as defined in NFPA 70, Article 100, by testing agency acceptable to authorities having jurisdiction.

4. Accessibility Requirements:
   a. Comply with governing accessibility regulations cited in ''REFERENCES'' article 087100, 1.02.D3 herein for door hardware on doors in an accessible route. This project must comply with all Federal Americans with Disability Act regulations and all Local Accessibility Regulations.

C. Pre-Installation Meetings

1. Keying Conference
   a. Incorporate keying conference decisions into final keying schedule after reviewing door hardware keying system including:

1) Function of building, flow of traffic, purpose of each area, degree of security required, and plans for future expansion.
2) Preliminary key system schematic diagram.
3) Requirements for key control system.
4) Requirements for access control.
5) Address for delivery of keys.

2. Pre-installation Conference
   a. Review and finalize construction schedule and verify availability of materials, Installer's personnel, equipment, and facilities needed to make progress and avoid delays.
   b. Inspect and discuss preparatory work performed by other trades.
   c. Inspect and discuss electrical roughing-in for electrified door hardware.
   d. Review sequence of operation for each type of electrified door hardware.
   e. Review required testing, inspecting, and certifying procedures.
   f. Review questions or concerns related to proper installation and adjustment of door hardware.

3. Electrified Hardware Coordination Conference:
   a. Prior to ordering electrified hardware, schedule and hold meeting to coordinate door hardware with security, electrical, doors and frames, and other related suppliers.

1.5 DELIVERY, STORAGE, AND HANDLING

A. Inventory door hardware on receipt and provide secure lock-up for hardware delivered to Project site. Promptly replace products damaged during shipping.

B. Tag each item or package separately with identification coordinated with final door hardware schedule, and include installation instructions, templates, and necessary fasteners with each item or package. Deliver each article of hardware in manufacturer's original packaging.

C. Maintain manufacturer-recommended environmental conditions throughout storage and installation periods.

D. Provide secure lock-up for door hardware delivered to Project. Control handling and installation of hardware items so that completion of Work will not be delayed by hardware losses both before and after installation.

E. Handle hardware in manner to avoid damage, marring, or scratching. Correct, replace or repair products damaged during Work. Protect products against malfunction due to paint, solvent, cleanser, or any chemical agent.

1.6 COORDINATION

A. Coordinate layout and installation of floor-recessed door hardware with floor construction. Cast anchoring inserts into concrete.

B. Installation Templates: Distribute for doors, frames, and other work specified to be factory or shop prepared. Check Shop Drawings of other work to confirm that adequate provisions are made for locating and installing door hardware to comply with indicated requirements.

C. Security: Coordinate installation of door hardware, keying, and access control with Owner's security consultant.

D. Electrical System Roughing-In: Coordinate layout and installation of electrified door hardware with connections to power supplies and building safety and security systems.

1.7 WARRANTY

A. Manufacturer's standard form in which manufacturer agrees to repair or replace components of door hardware that fail in materials or workmanship within published warranty period.

1. Warranty does not cover damage or faulty operation due to improper installation, improper use or abuse.
2. Warranty Period: Beginning from date of Substantial Completion, for durations indicated in manufacturer's published listings.
    a. Mechanical Warranty
        1) Locks
            a) Schlage L Series: 10 years
            b) Schlage ND Series: 10 years
            c) Best 9K Series: 10 years
        2) Exit Devices
            a) Von Duprin: 10 years
        3) Closers
            a) LCN 4000 Series: 30 years
        4) Automatic Operators
            a) LCN: 2 years
    b. Electrical Warranty
        1) Exit Devices
            a) Von Duprin: 3 years

1.8 MAINTENANCE

A. Furnish complete set of special tools required for maintenance and adjustment of hardware, including changing of cylinders.

B. Turn over unused materials to Owner for maintenance purposes.

PART 2 - PRODUCTS

2.1 MANUFACTURERS

A. The Owner requires use of certain products for their unique characteristics and project suitability to ensure continuity of existing and future performance and maintenance standards. After investigating available product offerings, the Awarding Authority has elected to prepare proprietary specifications. These products are specified with the notation: ''No Substitute.''

   1. Where ''No Substitute'' is noted, submittals and substitution requests for other products will not be considered.

B. Approval of alternate manufacturers and/or products other than those listed as ''Scheduled Manufacturer'' or ''Acceptable Manufacturers'' in the individual article for the product category are only to be considered by official substitution request in accordance with section 01 25 00.

C. Approval of products from manufacturers indicated in ''Acceptable Manufacturers'' is contingent upon those products providing all functions and features and meeting all requirements of scheduled manufacturer's product.

D. Where specified hardware is not adaptable to finished shape or size of members requiring hardware, furnish suitable types having same operation and quality as type specified, subject to Architect's approval.

2.2 MATERIALS

A. Fabrication

   1. Provide door hardware manufactured to comply with published templates generally prepared for machine, wood, and sheet metal screws. provide screws according to manufacturer’s recognized installation standards for application intended.
   2. Finish exposed screws to match hardware finish, or, if exposed in surfaces of other work, to match finish of this other work including prepared for paint surfaces to receive painted finish.
   3. Provide concealed fasteners wherever possible for hardware units exposed when door is closed. Coordinate with “Metal Doors and Frames”, “Flush Wood Doors”, “Stile and Rail Wood Doors” to ensure proper reinforcements. Advise the Architect where visible fasteners, such as thru bolts, are required.

B. Provide screws, bolts, expansion shields, drop plates and other devices necessary for hardware installation.

   1. Where fasteners are exposed to view: Finish to match adjacent door hardware material.

C. Cable and Connectors:

1. Where scheduled in the hardware sets, provide each item of electrified hardware and wire harnesses with number and gage of wires enough to accommodate electric function of specified hardware.
2. Provide Molex connectors that plug directly into connectors from harnesses, electric locking and power transfer devices.
3. Provide through-door wire harness for each electrified locking device installed in a door and wire harness for each electrified hinge, electrified continuous hinge, electrified pivot, and electric power transfer for connection to power supplies.

2.3 HINGES

A. Manufacturers and Products:

1. Scheduled Manufacturer and Product:
   a. Ives 5BB series

2. Acceptable Manufacturers and Products:
   a. Hager BB1191/1279 series
   b. McKinney TB series

B. Requirements:

1. Provide hinges conforming to ANSI/BHMA A156.1.
2. Provide five knuckle, ball bearing hinges.
3. 1-3/4 inch (44 mm) thick doors, up to and including 36 inches (914 mm) wide:
   a. Exterior: Standard weight, bronze or stainless steel, 4-1/2 inches (114 mm) high
   b. Interior: Standard weight, steel, 4-1/2 inches (114 mm) high

4. 1-3/4 inch (44 mm) thick doors over 36 inches (914 mm) wide:
   a. Exterior: Heavy weight, bronze/stainless steel, 5 inches (127 mm) high
   b. Interior: Heavy weight, steel, 5 inches (127 mm) high

5. 2 inches or thicker doors:
   a. Exterior: Heavy weight, bronze or stainless steel, 5 inches (127 mm) high
   b. Interior: Heavy weight, steel, 5 inches (127 mm) high

6. Adjust hinge width for door, frame, and wall conditions to allow proper degree of opening.
7. Provide three hinges per door leaf for doors 90 inches (2286 mm) or less in height, and one additional hinge for each 30 inches (762 mm) of additional door height.
8. Hinge Pins: Except as otherwise indicated, provide hinge pins as follows:
   a. Steel Hinges: Steel pins
   b. Non-Ferrous Hinges: Stainless steel pins
   c. Out-Swinging Exterior Doors: Non-removable pins
   d. Out-Swinging Interior Lockable Doors: Non-removable pins
   e. Interior Non-lockable Doors: Non-rising pins

9. Provide hinges with electrified options as scheduled in the hardware sets. Provide with number and gage of wires enough to accommodate electric function of specified hardware. Locate electric hinge at second hinge from bottom or nearest to electrified locking component. Provide mortar guard for each electrified hinge specified.

2.4 CONTINUOUS HINGES

A. Manufacturers:

1. Scheduled Manufacturer:
   a. Ives

2. Acceptable Manufacturers:
   a. Select
   b. ABH

B. Requirements:

1. Provide aluminum geared continuous hinges conforming to ANSI/BHMA A156.26, Grade 1.
2. Provide aluminum geared continuous hinges, where specified in the hardware sets, fabricated from 6063-T6 aluminum.
3. Provide split nylon bearings at each hinge knuckle for quiet, smooth, self-lubricating operation.
4. Provide hinges capable of supporting door weights up to 450 pounds, and successfully tested for 1,500,000 cycles.
5. On fire-rated doors, provide aluminum geared continuous hinges classified for use on rated doors by testing agency acceptable to authority having jurisdiction.
6. Provide aluminum geared continuous hinges with electrified option scheduled in the hardware sets. Provide with number and gage of wires enough to accommodate electric function of specified hardware.
7. Provide hinges 1 inch (25 mm) shorter in length than nominal height of door, unless otherwise noted or door details require shorter length and with symmetrical hole pattern.

2.5 FLUSH BOLTS

A. Manufacturers:

1. Scheduled Manufacturer:
   a. Ives

2. Acceptable Manufacturers:
   a. Burns
   b. Trimco

B. Requirements:

1. Provide automatic, constant latching, and manual flush bolts with forged bronze or stainless-steel face plates, extruded brass levers, and with wrought brass guides and strikes. Provide 12 inch (305 mm) steel or brass rods at doors up to 90 inches (2286 mm) in height. For doors over 90 inches (2286 mm) in height increase top rods by 6 inches (152 mm) for each additional 6 inches (152 mm) of door height. Provide dust-proof strikes at each bottom flush bolt.

2.6 COORDINATORS

A. Manufacturers:

1. Scheduled Manufacturer:
   a. Ives

2. Acceptable Manufacturers:
   a. Burns
   b. Trimco
   c. DCI

B. Requirements:

1. Where pairs of doors are equipped with automatic flush bolts, an astragal, or other hardware that requires synchronized closing of the doors, provide bar-type coordinating device, surface applied to underside of stop at frame head.
2. Provide filler bar of correct length for unit to span entire width of opening, and appropriate brackets for parallel arm door closers, surface vertical rod exit device strikes, or other stop mounted hardware. Factory-prepared coordinators for vertical rod devices as specified.

2.7 MORTISE LOCKS

A. Manufacturers and Products:

1. Scheduled Manufacturer and Product:
   a. Schlage L9000 series – (Where specified)

2. Acceptable Manufacturers and Products:
   a. No Substitute

B. Requirements:

1. Provide mortise locks conforming to ANSI/BHMA A156.13 Series 1000, Grade 1, and UL Listed for 3-hour fire doors.
2. Indicators: Where specified, provide indicator window measuring a minimum 2-3/5-inch x 3/5 inch with 180-degree visibility. Provide messages color-coded using ANSI Z535 Safety Red with full text and/or symbols, as scheduled, for easy visibility. When applicable allows for lock status indication on both sides of the door.

3. Provide locks manufactured from heavy gauge steel, containing components of steel with a zinc dichromate plating for corrosion resistance.
4. Provide lock case that is multi-function and field reversible for handing without opening case. Cylinders: Refer to ''KEYING'' article, herein.
5. Provide locks with standard 2-3/4 inches (70 mm) backset with full 3/4 inch (19 mm) throw stainless steel mechanical anti-friction latchbolt. Provide deadbolt with full 1-inch (25 mm) throw, constructed of stainless steel.
6. Provide standard ASA strikes unless extended lip strikes are necessary to protect trim. Provide electrified options as scheduled in the hardware sets. Where scheduled, provide switches and sensors integrated into the locks and latches.
7. Provide motor based electrified locksets that comply with the following requirements:
   a. Universal input voltage – single chassis accepts 12 or 24VDC to allow for changes in the field without changing lock chassis.
   b. Fail Safe/Fail Secure – changing mode between electrically locked (fail safe) and electrically unlocked (fail secure) is field selectable without opening the lock case.
   c. Low maximum current draw – maximum 0.4 amps to allow for multiple locks on a single power supply.
   d. Low holding current – maximum 0.01 amps to produce minimal heat, eliminate “hot levers” in electrically locked applications, and to provide reliable operation in wood doors that provide minimal ventilation and air flow.
   e. Connections – provide quick-connect Molex system standard.

8. Lever Trim: Solid brass, bronze, or stainless steel, cast or forged in design specified, with wrought roses and external lever spring cages. Provide thru-bolted levers with 2-piece spindles.
   a. Lever Design: See Hardware Sets>.

2.8 CYLINDRICAL LOCKS – GRADE 1

A. Manufacturers and Products:

1. Scheduled Manufacturer and Product:
   a. Schlage ND Series: Privacy restroom locks with indicators where specified
   b. Best 9K Series: Where specified

2. Acceptable Manufacturers and Products:
   a. No Substitute

B. Requirements:

1. Provide cylindrical locks conforming to ANSI/BHMA A156.2 Series 4000, Grade 1, and UL Listed for 3-hour fire doors.
2. Indicators: Where specified, provide escutcheon with lock status indicator window on top of lockset rose:
   a. Escutcheon height (including rose) 6.05 inches high by 3.68 inches wide.
   b. Indicator window measuring a minimum 3.52-inch by .60 inch with 1.92 square-inches of front facing viewing area and 180-degree visibility with a total of .236 square-inches of total viewable area.

c. Provide snap-in serviceable window to prevent tampering. Lock must function if indicator is compromised.
d. Provide messages color-coded with full text and symbol, as scheduled, for easy visibility.
e. Unlocked and Unoccupied message will display on white background, and Locked and Occupied message will display on red background.

3. Cylinders: Refer to ''KEYING'' article, herein.
4. Provide locks with standard 2-3/4 inches (70 mm) backset, unless noted otherwise, with 1/2-inch latch throw. Provide proper latch throw for UL listing at pairs.
5. Provide locksets with separate anti-rotation thru-bolts, and no exposed screws.
6. Provide independently operating levers with two external return spring cassettes mounted under roses to prevent lever sag.
7. Provide standard ASA strikes unless extended lip strikes are necessary to protect trim.
8. Provide electrified options as scheduled in the hardware sets.
9. Lever Trim: Solid cast levers without plastic inserts and wrought roses on both sides.
   a. Lever Design: See Hardware Sets

2.9 EXIT DEVICES

A. Manufacturers and Products:

1. Scheduled Manufacturer and Product:
   a. Von Duprin 98/35A series

2. Acceptable Manufacturers and Products:
   a. No Substitute

B. Requirements:

1. Provide exit devices tested to ANSI/BHMA A156.3 Grade 1 and UL listed for Panic Exit or Fire Exit Hardware.
2. Cylinders: Refer to ''KEYING'' article, herein.
3. Provide smooth touchpad type exit devices, fabricated of brass, bronze, stainless steel, or aluminum, plated to standard architectural finishes to match balance of door hardware.
4. Touchpad must extend a minimum of one half of door width. No plastic inserts are allowed in touchpads.
5. Provide exit devices with deadlatching feature for security and for future addition of alarm kits and/or other electrified requirements.
6. Provide exit devices with weather resistant components that can withstand harsh conditions of various climates and corrosive cleaners used in outdoor pool environments.
7. Provide flush end caps for exit devices.
8. Provide exit devices with manufacturer's approved strikes.
9. Provide exit devices cut to door width and height. Install exit devices at height recommended by exit device manufacturer, allowable by governing building codes, and approved by Architect.

10. Mount mechanism case flush on face of doors or provide spacers to fill gaps behind devices. Where glass trim or molding projects off face of door, provide glass bead kits.
11. Provide cylinder or hex-key dogging as specified at non fire-rated openings.
12. Removable Mullions: 2 inches (51 mm) x 3 inches (76 mm) steel tube. Where scheduled as keyed removable mullion, provide type that can be removed by use of a keyed cylinder, which is self-locking when re-installed.
13. Provide factory drilled weep holes for exit devices used in full exterior application, highly corrosive areas, and where noted in hardware sets.
14. Provide electrified options as scheduled.
15. Top latch mounting: double- or single-tab mount for steel doors, face mount for aluminum doors eliminating requirement of tabs, and double tab mount for wood doors.
16. Provide exit devices with optional trim designs to match other lever and pull designs used on the project.
17. Special Options:
    a. SI
        1) Provide dogging indicators for visible indication of dogging status.
    b. CVC
        1) Provide cable-actuated concealed vertical latch system in two-point for non-rated or fire rated wood doors up to a 90 minute rating and less bottom latch (LBL) configuration for non-rated or fire rated wood doors up to 20 minute rating. Vertical rods not permitted.
            a) Cable: Stainless steel with abrasive resistant coating. Conduit and core wire ends snap into latch and center slides without use of tools.
            b) Wood Door Prep: Maximum 1 inch x 1.1875 inch x 3.875 inches top latch pocket and 1 inch x 1.1875 inch x 5 inches bottom latch pocket which does not require the use of a metal wrap or edge for non-rated or fire rated wood doors up to a 45 minute rating.
            c) Latchbolts and Blocking Cams: Manufactured from sintered metal low carbon copper- infiltrated steel, with molybdenum disulfide low friction coating.
            d) Top Latchbolt: Minimum 0.38 inch (10 mm) and greater than 90-degree engagement with strike to prevent door and frame separation under high static load.
            e) Bottom Latchbolt: Minimum of 0.44-inch (11 mm) engagement with strike.
            f) Product Cycle Life: 1,000,000 cycles.
            g) Latch Operation: Top and bottom latch operate independently of each other. Top latch fully engages top strike even when bottom latch is compromised. Separate trigger mechanisms not permitted.
            h) Latch release does not require separate trigger mechanism.
            i) Cable and latching system characteristics:
                i. Installed independently of exit device installation, and capable of functioning on door prior to device and trim installation.
                ii. Connected to exit device at single point in steel and aluminum doors, and two points for top and bottom latches in wood doors.
                iii. Bottom latch height adjusted, from single point for steel and aluminum doors and two points for wood doors, after system is installed and connected to exit device, while door is hanging

iv. Bottom latch position altered up and down minimum of 2 inches (51 mm) in steel and aluminum doors without additional adjustment. Bottom latch deadlocks in every adjustment position in wood doors.
v. Top and bottom latches in steel and aluminum doors and top latch in wood doors may be removed while door is hanging.

2.10 ELECTRONIC ACCESS CONTROL LOCKSETS AND EXIT DEVICE TRIM

A. Manufacturers:

1. Scheduled Manufacturer and Product:
   a. Schlage AD Series

2. Acceptable Manufacturers and Products:
   a. No Substitute

B. Requirements:

1. Provide adaptable electronic access control products that comply with the following requirements:
   a. Listed, UL 294 - The Standard of Safety for Access Control System Units.
   b. Compliant with ANSI/BHMA A156.25 Grade 1 Operation and Security.
   c. Certified to UL10C, FCC Part15, Florida Building Code Standards TAS 201 large missile impact, TAS 202 and TAS 203.
   d. Compliant with ASTM E330 for door assemblies.
   e. Compliant with ICC / ANSI A117.1, NFPA 101, NFPA 80, and Industry Canada IC.

2. Functions: Provide functions as scheduled that are field configurable without taking the adaptable electronic product off the door.
3. Emergency Override: Provide mechanical key override; cylinders: Refer to ''KEYING'' article, herein.
4. Levers:
   a. Vandal Resistance: Exterior (secure side) lever rotates freely while door remains locked, preventing damage to internal lock components from vandalism by excessive force.
   b. Provide non-handed lever trim that operates independently of non-locking levers.
   c. Style: <See Hardware sets

5. Features:
   a. Audible feedback that can be enabled or disabled.
   b. Tamper-Resistant Screws: Tamper torx screws on inside escutcheon for increased security.
   c. Visual tri-colored LED indicators that indicate activation, additional PIN code credential required, operational systems status, system error conditions and low power conditions.
   d. Door Position Switch
   e. Interior Cover Tamper Guard
   f. Mechanical Key Override

g. Request to Exit
h. Request to Enter
i. Lock/Unlock Status

6. Credential Reader
   a. Credential Reader Configuration: Provide credential reader modules in the following configurations as indicated in door hardware sets.
   b. Credential Reader Capabilities: Provide credential readers capable of operating with the following integrated software partners.
      1) 13.56 MHz Smart card credentials:
         a) Secure section (Multi-Technology and Smartcard): Schlage MIFARE Classic, Schlage MIFARE DESFire EV1/EV3, PIV and PIV-I Compatible
         b) 13.56 MHz Serial number only (Multi-Technology and Smartcard): MIFARE, DESFire, HID iClass, MIFARE DESFire EV1/EV3
         c) 125 kHz Proximity card credentials: Schlage, XceedID, HID, GE/CASI ProxLite and AWID.

7. Operation:
   a. Networked – wireless
      1) Adaptable electronic access control product system interface:
      2) Adaptable electronic access control products to have real-time bidirectional communication between access control system and lock.
      3) Remote Commanding By Partner Integrated Access Control Network Software: Battery-powered lockset shall have ''Wake on Radio'' feature causing activation of remote, wireless access control devices, enabling activated devices to be configured, locked or unlocked from a centralized location within 10 seconds or less without user interface at the device.
      4) Local Commanding: Provide adaptable electronic access control product with the ability to be configured, locked or unlocked locally by handheld programming device, in real-time.
      5) When Utilized with Access Control Network Software with Remote Commanding Capability: Provide adaptable electronic access control product with the ability to be remotely locked down or unlocked within 10 seconds or less while battery powered without user interface at the device.
      6) Real-time response of battery powered device capable of being configured at door by handheld programming device and remotely by Partner integrated software.
      7) Upon Loss of Power to Device: Provide adaptable electronic access control product with the ability to manage access control offline in one of three methods below that can be configured in the field at device by handheld programming device and remotely by Partner integrated software:
         a) Fail locked (secured)
         b) Fail unlocked (unsecured)
         c) Fail As-Is

8) Upon Loss of Communication Between Device and Network: Provide adaptable electronic access control product with the ability to manage access control offline in one of four methods below that can be configured in the field at lockset by handheld programming device and remotely by Partner integrated software:
   a) Fail locked (secured)
   b) Fail unlocked (unsecured)
   c) Fail As-Is
   d) Fail to Degraded/cache mode utilizing cache memory with following selectable options:
      i. Grant access up to the last 1,000 unique previously accepted User IDs.
      ii. Grant access up to the last 1,000 unique previously accepted facility/site codes
      iii. Remove from cache previously stored User IDs or facility/site codes that have not been presented to lock within the last 5 days.
9) Provide adaptable electronic access control product with the ability to be configured at door by handheld programming device and remotely by Partner integrated software the length of time device is unlocked upon access grant.
10) Provide adaptable electronic access control product with the ability to communicate identifying information such as firmware versions, hardware versions, serial numbers, and manufacturing dates by handheld programming device and remotely by Partner integrated software.
11) Wireless Transmission:
   a) Modulation: 900 MHz spread spectrum, direct sequence, 10 channels.
   b) Encryption: AES-128-bit Key minimum.

C. Components

1. Product: Schlage HHD series with Utility Software.
   a. Provide Handheld Programming Device for adaptable electronic access control products capable of the following minimum requirements.
      1) Capable of initializing lock and accessories using preloaded software.
      2) Utilized to field configure electronic access control devices, to download firmware updates and door files to device, and to download audit files from device.

2. Provide Panel Interface for adaptable electronic access control products.
   a. Product: Schlage PIM400-485 or PIM400-TD2 Panel Interface Module as required. (AD-400) - Furnished by DIV 28

2.11 ELECTRIC STRIKES

A. Manufacturers and Products:

1. Scheduled Manufacturer and Product:
   a. Von Duprin 6000 Series

2. Acceptable Manufacturers and Products:

a. No Substitute

B. Requirements:

1. Provide electric strikes designed for use with type of locks shown at each opening.
2. Provide electric strikes UL Listed as burglary resistant that are tested to a minimum endurance test of 1,000,000 cycles.
3. Where required, provide electric strikes UL Listed for fire doors and frames.
4. Provide transformers and rectifiers for each strike as required. Verify voltage with electrical contractor.

2.12 PASSIVE INFRARED MOTION SENSORS

A. Manufacturers and Products:

1. Scheduled Manufacturer and Product:
   a. Schlage SCAN II Series

2. Acceptable Manufacturers and Products:
   a. RCI 915 Series
   b. Securitron XMS Series
   c. Security Door Controls MD-31D Series

B. Requirements:

1. Provide motion sensors as specified in hardware groups.

2.13 PUSHBUTTONS

A. Manufacturers:

1. Scheduled Manufacturer:
   a. Locknetics

2. Acceptable Manufacturers:
   a. Securitron
   b. Alarm Controls
   c. Camden Door Controls

B. Requirements:

1. Provide push buttons as specified in hardware groups.

2.14 POWER SUPPLIES

A. Manufacturers and Products:

1. Scheduled Manufacturer and Product:

a. Schlage/Von Duprin PS900 Series

2. Acceptable Manufacturers and Products:
   a. No Substitute

B. Requirements:

1. Provide power supplies approved by manufacturer of supplied electrified hardware.
2. Provide appropriate quantity of power supplies necessary for proper operation of electrified locking components as recommended by manufacturer of electrified locking components with consideration for each electrified component using power supply, location of power supply, and approved wiring diagrams. Locate power supplies as directed by Architect.
3. Provide regulated and filtered 24 VDC power supply, and UL class 2 listed.
4. Provide power supplies with the following features:
   a. 12/24 VDC Output, field selectable.
   b. Class 2 Rated power limited output.
   c. Universal 120-240 VAC input.
   d. Low voltage DC, regulated and filtered.
   e. Polarized connector for distribution boards.
   f. Fused primary input.
   g. AC input and DC output monitoring circuit w/LED indicators.
   h. Cover mounted AC Input indication.
   i. Tested and certified to meet UL294.
   j. NEMA 1 enclosure.
   k. Hinged cover w/lock down screws.
   l. High voltage protective cover.

2.15 CYLINDERS

A. Manufacturers:

1. Scheduled Manufacturer and Product:
   a. Existing Best Peaks

2. Acceptable Manufacturers and Products:
   a. No Substitute

B. Requirements:

1. Provide cylinders/cores to match Owner's existing key system, compliant with ANSI/BHMA A156.5; latest revision; cylinder face finished to match lockset, manufacturer's series as indicated. Refer to "KEYING" article, herein.

2.16 KEYING

A. Scheduled System:

1. Existing factory registered system:
    a. Provide cylinders/cores keyed into Owner's existing factory registered keying system. Comply with guidelines in ANSI/BHMA A156.28, incorporating decisions made at keying conference.

B. Requirements:

1. Construction Keying:
    a. Replaceable Construction Cores.
        1) Provide temporary construction cores replaceable by permanent cores, furnished in accordance with the following requirements.
            a) 3 construction control keys
            b) 12 construction change (day) keys.
        2) Owner or Owner's Representative will replace temporary construction cores with permanent cores.

2. Permanent Keying:
    a. Provide permanent cylinders/cores keyed by the manufacturer according to the following key system.
        1) Master Keying system as directed by the Owner.
    b. Forward bitting list and keys separately from cylinders, by means as directed by Owner. Failure to comply with forwarding requirements will be cause for replacement of cylinders/cores involved at no additional cost to Owner.
    c. Provide keys with the following features:
        1) Material: Nickel silver; minimum thickness of .107-inch (2.3mm)
    d. Identification:
        1) Mark permanent cylinders/cores and keys with applicable blind code for identification. Do not provide blind code marks with actual key cuts.
        2) Identification stamping provisions must be approved by the Architect and Owner.
        3) Stamp cylinders/cores and keys with Owner's unique key system facility code as established by the manufacturer; key symbol and embossed or stamped with "DO NOT DUPLICATE" along with the "PATENTED" or patent number to enforce the patent protection.
        4) Failure to comply with stamping requirements will be cause for replacement of keys involved at no additional cost to Owner.
        5) Forward permanent cylinders/cores to Owner, separately from keys, by means as directed by Owner.
    e. Quantity: Furnish in the following quantities.
        1) Permanent Control Keys: 3.
        2) Master Keys: 6.
        3) Change (Day) Keys: 3 per cylinder/core that is keyed differently
        4) Key Blanks: Quantity as determined in the keying meeting.

2.17 KEY CONTROL SYSTEM

A. Manufacturers:

1. Scheduled Manufacturer:
   a. Telkee

2. Acceptable Manufacturers:
   a. HPC
   b. Lund

B. Requirements:

1. Provide key control system, including envelopes, labels, tags with self-locking key clips, receipt forms, 3-way visible card index, temporary markers, permanent markers, and standard metal cabinet, all as recommended by system manufacturer, with capacity for 150% of number of locks required for Project.
   a. Provide hinged-panel type cabinet for wall mounting.

2.18 DOOR CLOSERS

A. Manufacturers and Products:

1. Scheduled Manufacturer and Product:
   a. LCN 4010/4110/4020 series

2. Acceptable Manufacturers and Products:
   a. No Substitute

B. Requirements:

1. Provide door closers conforming to ANSI/BHMA A156.4 Grade 1 requirements by BHMA certified independent testing laboratory. Certify surface mounted mechanical closers to meet fifteen million (15,000,000) full load cycles. ISO 9000 certify closers. Stamp units with date of manufacture code.
2. Provide door closers with fully hydraulic, full rack and pinion action with high strength cast iron cylinder, and full complement bearings at shaft.
3. Cylinder Body: 1-1/2-inch (38 mm) diameter with 11/16-inch (17 mm) diameter double heat-treated pinion journal.
4. Hydraulic Fluid: Fireproof, passing requirements of UL10C, and requiring no seasonal closer adjustment for temperatures ranging from 120 degrees F to -30 degrees F.
5. Spring Power: Continuously adjustable over full range of closer sizes, and providing reduced opening force as required by accessibility codes and standards.
6. Hydraulic Regulation: By tamper-proof, non-critical valves, with separate adjustment for latch speed, general speed, and backcheck.
7. Provide closers with solid forged steel main arms and factory assembled heavy-duty forged forearms for parallel arm closers. When closers are parallel arm mounted, provide closers which mount within 6-inch (152 mm) top rail without use of mounting plate so that closer is not visible through vision panel from pull side.
8. Pressure Relief Valve (PRV) Technology: Not permitted.
9. Finish for Closer Cylinders, Arms, Adapter Plates, and Metal Covers: Powder coating finish which has been certified to exceed 100 hours salt spray testing as described in ANSI/BHMA Standard A156.4 and ASTM B117, or has special rust inhibitor (SRI).

10. Provide special templates, drop plates, mounting brackets, or adapters for arms as required for details, overhead stops, and other door hardware items interfering with closer mounting.

2.19 ELECTROMECHANICAL AUTOMATIC OPERATORS

A. Manufacturers and Products:

1. Scheduled Manufacturer and Product:
   a. LCN Senior Swing

2. Acceptable Manufacturers and Products:
   a. No Substitute

B. Requirements:

1. Provide low energy automatic operator units that are electromechanical design complying with ANSI/BHMA A156.19.
   a. Opening: Powered by DC motor working through reduction gears.
   b. Closing: Spring force.
   c. Manual, hydraulic, or chain drive closers: Not permitted.
   d. Operation: Motor is off when door is in closing mode. Door can be manually operated with power on or off without damage to operator. Provide variable adjustments, including opening and closing speed adjustment.
   e. Cover: Aluminum.

2. Provide units with manual off/auto/hold-open switch, push and go function to activate power operator, vestibule interface delay, electric lock delay, hold-open delay adjustable from 1 to 32 seconds, and logic terminal to interface with accessories, mats, and sensors.
3. Provide drop plates, brackets, and adapters for arms as required to suit details.
4. Provide motion sensors and/or actuator switches, and receivers for operation as specified. Provide weather-resistant actuators at exterior applications.
5. Provide key switches, with LED's, recommended and approved by manufacturer of automatic operator as required for function as described in operation description of hardware sets. Cylinders: Refer to ''KEYING'' article, herein.
6. Provide complete assemblies of controls, switches, power supplies, relays, and parts/material recommended and approved by manufacturer of automatic operator for each individual leaf. Actuators control both doors simultaneously at pairs. Sequence operation of exterior and vestibule doors with automatic operators to allow ingress or egress through both sets of openings as directed by Architect. Locate actuators, key switches, and other controls as directed by Architect.

2.20 DOOR TRIM

A. Manufacturers:

1. Scheduled Manufacturer:

a. Ives

2. Acceptable Manufacturers:
   a. Burns
   b. Trimco

B. Requirements:

1. Provide push plates, push bars, pull plates, pulls, and hands-free reversible door pulls with diameter and length as scheduled.

2.21 PROTECTION PLATES

A. Manufacturers:

1. Scheduled Manufacturer:
   a. Ives

2. Acceptable Manufacturers:
   a. Burns
   b. Trimco

B. Requirements:

1. Provide protection plates with a minimum of 0.050 inch (1 mm) thick, beveled four edges as scheduled. Furnish with sheet metal or wood screws, finished to match plates.
2. Sizes plates 2 inches (51 mm) less width of door on single doors, pairs of doors with a mullion, and doors with edge guards. Size plates 1 inch (25 mm) less width of door on pairs without a mullion or edge guards.
3. At fire rated doors, provide protection plates over 16 inches high with UL label.

2.22 OVERHEAD STOPS AND OVERHEAD STOP/HOLDERS

A. Manufacturers:

1. Scheduled Manufacturers:
   a. Glynn-Johnson

2. Acceptable Manufacturers:
   a. No Substitute

B. Requirements:

1. Provide overhead stop at any door where conditions do not allow for a wall stop or floor stop presents tripping hazard.

2.23 DOOR STOPS AND HOLDERS

A. Manufacturers:

1. Scheduled Manufacturer:
   a. Ives

2. Acceptable Manufacturers:
   a. Burns
   b. Trimco
   c. Rockwood

B. Provide door stops at each door leaf:

1. Provide wall stops wherever possible. Provide concave type where lockset has a push button of thumbturn.
2. Where a wall stop cannot be used, provide universal floor stops.
3. Where wall or floor stop cannot be used, provide overhead stop.
4. Provide roller bumper where doors open into each other and overhead stop cannot be used.

2.24 THRESHOLDS, SEALS, DOOR SWEEPS, AUTOMATIC DOOR BOTTOMS, AND GASKETING

A. Manufacturers:

1. Scheduled Manufacturer:
   a. Zero International

2. Acceptable Manufacturers:
   a. National Guard
   b. DHSI
   c. Legacy
   d. Pemko

B. Requirements:

1. Provide thresholds, weather-stripping, and gasketing systems as specified and per architectural details. Match finish of other items.
2. Smoke- and Draft-Control Door Assemblies: Where smoke- and draft-control door assemblies are required, provide door hardware that meets requirements of assemblies tested according to UL 1784 and installed in compliance with NFPA 105.
3. Provide door sweeps, seals, astragals, and auto door bottoms only of type where resilient or flexible seal strip is easily replaceable and readily available.
4. Size thresholds 1/2 inch (13 mm) high by 5 inches (127 mm) wide by door width unless otherwise specified in the hardware sets or detailed in the drawings.

2.25 SILENCERS

A. Manufacturers:

1. Scheduled Manufacturer:
   a. Ives

2. Acceptable Manufacturers:
   a. Burns
   b. Rockwood
   c. Trimco

B. Requirements:

1. Provide ''push-in'' type silencers for hollow metal or wood frames.
2. Provide one silencer per 30 inches (762 mm) of height on each single frame, and two for each pair frame.
3. Omit where gasketing is specified.

2.26 FINISHES

A. FINISH: BHMA 626/652 (US26D); EXCEPT:

1. Hinges at Exterior Doors: BHMA 630 (US32D)
2. Aluminum Geared Continuous Hinges: BHMA 628 (US28)
3. Push Plates, Pulls, and Push Bars: BHMA 630 (US32D)
4. Protection Plates: BHMA 630 (US32D)
5. Overhead Stops and Holders: BHMA 630 (US32D)
6. Door Closers: Powder Coat to Match
7. Wall Stops: BHMA 630 (US32D)
8. Latch Protectors: BHMA 630 (US32D)
9. Weatherstripping: Clear Anodized Aluminum
10. Thresholds: Mill Finish Aluminum

B. FINISH: BHMA 613/640 (US10B); EXCEPT:

1. Door Closers: Powder Coat to Match.
2. Latch Protectors: US32D (BHMA 630).
3. Weatherstripping: Dark Bronze Anodized Aluminum.
4. Thresholds: Extruded Architectural Bronze, Oil-Rubbed

C. FINISH: BHMA 643E/716 (US11); EXCEPT:

1. Door Closers: Powder Coat to Match.
2. Weatherstripping: Dark Bronze Anodized Aluminum.
3. Thresholds: Extruded Architectural Bronze, Oil-Rubbed

PART 3 - EXECUTION

3.1 EXAMINATION

A. Prior to installation of hardware, examine doors and frames, with Installer present, for compliance with requirements for installation tolerances, labeled fire-rated door assembly construction, wall and floor construction, and other conditions affecting performance. Verify doors, frames, and walls have been properly reinforced for hardware installation.

B. Examine roughing-in for electrical power systems to verify actual locations of wiring connections before electrified door hardware installation.

C. Submit a list of deficiencies in writing and proceed with installation only after unsatisfactory conditions have been corrected.

3.2 INSTALLATION

A. Mount door hardware units at heights to comply with the following, unless otherwise indicated or required to comply with governing regulations.

1. Standard Steel Doors and Frames: ANSI/SDI A250.8.
2. Custom Steel Doors and Frames: HMMA 831.
3. Interior Architectural Wood Flush Doors: ANSI/WDMA I.S. 1A
4. Installation Guide for Doors and Hardware: DHI TDH-007-20

B. Install door hardware in accordance with NFPA 80, NFPA 101 and provide post-install inspection, testing as specified in section 1.03.E unless otherwise required to comply with governing regulations.

C. Install each hardware item in compliance with manufacturer's instructions and recommendations, using only fasteners provided by manufacturer.

D. Do not install surface mounted items until finishes have been completed on substrate. Protect all installed hardware during painting.

E. Set units level, plumb and true to line and location. Adjust and reinforce attachment substrate as necessary for proper installation and operation.

F. Drill and countersink units that are not factory prepared for anchorage fasteners. Space fasteners and anchors according to industry standards.

G. Install operating parts so they move freely and smoothly without binding, sticking, or excessive clearance.

H. Hinges: Install types and in quantities indicated in door hardware schedule but not fewer than quantity recommended by manufacturer for application indicated.

I. Lock Cylinders:

1. Install construction cores to secure building and areas during construction period.
2. Replace construction cores with permanent cores as indicated in keying section.

J. Wiring: Coordinate with Division 26, ELECTRICAL and Division 28 ELECTRONIC SAFETY AND SECURITY sections for:

1. Conduit, junction boxes and wire pulls.
2. Connections to and from power supplies to electrified hardware.
3. Connections to fire/smoke alarm system and smoke evacuation system.
4. Connection of wire to door position switches and wire runs to central room or area, as directed by Architect.
5. Connections to panel interface modules, controllers, and gateways.
6. Testing and labeling wires with Architect's opening number.

K. Continuous Hinges: Re-locate the door and frame fire rating labels where they will remain visible so that the hinge does not cover the label once installed.

L. Door Closers & Auto Operators: Mount closers/operators on room side of corridor doors, inside of exterior doors, and stair side of stairway doors from corridors. Mount closers/operators so they are not visible in corridors, lobbies and other public spaces unless approved by Architect.

M. Overhead Stops/Holders: Mount overhead stops/holders on room side of corridor doors, inside of exterior doors, and stair side of stairway doors.

N. Power Supplies: Locate power supplies as indicated or, if not indicated, above accessible ceilings or in equipment room, or alternate location as directed by Architect.

O. Thresholds: Set thresholds in full bed of sealant complying with requirements specified in Division 07 Section ''Joint Sealants.''

P. Stops: Provide floor stops for doors unless wall or other type stops are indicated in door hardware schedule. Do not mount floor stops where they may impede traffic or present tripping hazard.

Q. Perimeter Gasketing: Apply to head and jamb, forming seal between door and frame.

R. Meeting Stile Gasketing: Fasten to meeting stiles, forming seal when doors are closed.

S. Door Bottoms and Sweeps: Apply to bottom of door, forming seal with threshold when door is closed.

3.3 ADJUSTING

A. Initial Adjustment: Adjust and check each operating item of door hardware and each door to ensure proper operation or function of every unit. Replace units that cannot be adjusted to operate as intended. Adjust door control devices to compensate for final operation of heating and ventilating equipment and to comply with referenced accessibility requirements.

1. Spring Hinges: Adjust to achieve positive latching when door can close freely from an open position of 30 degrees.

2. Electric Strikes: Adjust horizontal and vertical alignment of keeper to properly engage lock bolt.
3. Door Closers: Adjust sweep period to comply with accessibility requirements and requirements of authorities having jurisdiction.

B. Occupancy Adjustment: Approximately three to six months after date of Substantial Completion, examine and readjust each item of door hardware, including adjusting operating forces, as necessary to ensure function of doors and door hardware.

3.4 CLEANING AND PROTECTION

A. Clean adjacent surfaces soiled by door hardware installation.

B. Clean operating items per manufacturer's instructions to restore proper function and finish.

C. Provide final protection and maintain conditions that ensure door hardware is without damage or deterioration at time of Substantial Completion.

3.5 DOOR HARDWARE SCHEDULE

A. The intent of the hardware specification is to specify the hardware for interior and exterior doors, and to establish a type, continuity, and standard of quality. However, it is the door hardware supplier's responsibility to thoroughly review existing conditions, schedules, specifications, drawings, and other Contract Documents to verify the suitability of the hardware specified.

B. Discrepancies, conflicting hardware, and missing items are to be brought to the attention of the architect with corrections made prior to the bidding process. Omitted items not included in a hardware set should be scheduled with the appropriate additional hardware required for proper application.

C. Hardware items are referenced in the following hardware schedule. Refer to the above specifications for special features, options, cylinders/keying, and other requirements.

D. Hardware Sets:

HARDWARE SET NO. 01A

For use on Door #(s):

C124B C124C D123 E121A

Provide each PR door(s) with the following:

QTY		DESCRIPTION	CATALOG NUMBER	FINISH	MFR
1	EA	CONT. HINGE	027XY	628	IVE
1	EA	CONT. HINGE	027XY EPT	628	IVE
1	EA	POWER TRANSFER	EPT10 CON	689	VON
1	EA	REMOVABLE MULLION	KR4954 STAB	689	VON
1	EA	PANIC HARDWARE	LD-98-EO	626	VON
1	EA	ELEC PANIC HARDWARE	RX-QEL-98-NL-OP-110MD-CON 24 VDC	626	VON
1	EA	RIM CYLINDER	12E72 PEAKS	626	BES
1	EA	MORTISE CYLINDER	1E74 PEAKS	626	BES
1	EA	90 DEG OFFSET PULL	8190EZHD 12" O	630-316	IVE
2	EA	OH STOP	100S	630	GLY
2	EA	SURFACE CLOSER	4111 EDA	689	LCN
2	EA	MOUNTING PLATE	4110-18 SRT	689	LCN
2	EA	CUSH SHOE SUPPORT	4110-30 SRT	689	LCN
2	EA	BLADE STOP SPACER	4110-61 SRT	689	LCN
2	EA	DOOR SWEEP	8197AA	AA	ZER
1	EA	THRESHOLD	65A-223	A	ZER
1	EA	WIRE HARNESS	CON-P (LENGTH AS REQUIRED)		VON
1	EA	WIRE HARNESS	CON-6W		VON
2	EA	DOOR POSITION SWITCH	195-12W	WHT	GEO
1	EA	CENTRAL POWER SUPPLY	SPECIFIED IN MISC HARDWARE SET		
1	EA	CARD READER	SPECIFIED BY OTHERS		

DOOR OPERATION:
DOOR NORMALLY CLOSED AND LOCKED
ENTRY BY VALID CARD CREDENTIAL OR KEY OVERRIDE
FREE EGRESS FROM INSIDE AT ALL TIMES
DOOR CONTACT AND REQUEST TO EXIT MONITORED BY DIVISION 28

HARDWARE SET NO. 01B

For use on Door #(s):
B107D

Provide each SGL door(s) with the following:

QTY		DESCRIPTION	CATALOG NUMBER	FINISH	MFR
1	EA	CONT. HINGE	027XY EPT	628	IVE
1	EA	POWER TRANSFER	EPT10 CON	689	VON
1	EA	ELEC PANIC HARDWARE	RX-QEL-98-NL-OP-110MD-CON 24 VDC	626	VON
1	EA	RIM CYLINDER	12E72 PEAKS	626	BES
1	EA	90 DEG OFFSET PULL	8190EZHD 12" O	630-316	IVE
1	EA	SURF. AUTO OPERATOR	9542 AS REQ (120/240 VAC)	ANCLR	LCN
1	EA	WEATHER RING	8310-801		LCN
2	EA	ACTUATOR, TOUCH	8310-853T	630	LCN
1	EA	MOUNT BOX	8310-867F		LCN
1	EA	CLOSER MOUNTING PLATE	9540-18	689	LCN
1	EA	DOOR SWEEP	8197AA	AA	ZER
1	EA	THRESHOLD	65A-223	A	ZER
1	EA	WIRE HARNESS	CON-P (LENGTH AS REQUIRED)		VON
1	EA	WIRE HARNESS	CON-6W		VON
1	EA	DOOR POSITION SWITCH	195-12W	WHT	GEO
1	EA	CENTRAL POWER SUPPLY	SPECIFIED IN MISC HARDWARE SET		
1	EA	CARD READER	SPECIFIED BY OTHERS		

DOOR OPERATION:
DOORS NORMALLY CLOSED AND LOCKED FROM OUTSIDE.
ENTRY FROM EXTERIOR BY VALID CARD CREDENTIAL OR KEY OVERRIDE WHICH WILL RELEASE ELECTRIC STRIKE.
VALID CARD CREDENTIAL WILL ALSO ALLOW EXTERIOR ADA WALL ACTUATOR TO BE USED TO OPEN DOOR
INSIDE ADA WALL ACTUATOR ALWAYS ACTIVE FOR USE TO OPEN DOOR
DOOR CONTACT AND REQUEST TO EXIT MONITORED BY DIVISION 28
FREE EGRESS FROM INSIDE ALWAYS

HARDWARE SET NO. 01C

For use on Door #(s):
B107A

Provide each PR door(s) with the following:

QTY		DESCRIPTION	CATALOG NUMBER	FINISH	MFR
2	EA	CONT. HINGE	027XY	628	IVE
1	EA	REMOVABLE MULLION	KR4954 STAB	689	VON
2	EA	PANIC HARDWARE	LD-98-EO	626	VON
1	EA	MORTISE CYLINDER	1E74 PEAKS	626	BES
2	EA	OH STOP	100S	630	GLY
2	EA	SURFACE CLOSER	4111 EDA	689	LCN
2	EA	MOUNTING PLATE	4110-18 SRT	689	LCN
2	EA	CUSH SHOE SUPPORT	4110-30 SRT	689	LCN
2	EA	BLADE STOP SPACER	4110-61 SRT	689	LCN
2	EA	DOOR SWEEP	8197AA	AA	ZER
1	EA	THRESHOLD	65A-223	A	ZER
2	EA	DOOR POSITION SWITCH	195-12W	WHT	GEO

DOOR OPERATION:
DOOR CONTACT MONITORED BY DIVISION 28

HARDWARE SET NO. 01D

For use on Door #(s):
B107C

Provide each SGL door(s) with the following:

QTY		DESCRIPTION	CATALOG NUMBER	FINISH	MFR
1	EA	CONT. HINGE	112XY	628	IVE
1	EA	DUMMY PUSH BAR	350	626	VON
1	EA	90 DEG OFFSET PULL	8190EZHD 12" O	630-316	IVE
1	EA	SURF. AUTO OPERATOR	9531 AS REQ (120/240 VAC)	ANCLR	LCN
2	EA	ACTUATOR, TOUCH	8310-853T	630	LCN
1	EA	CLOSER MOUNTING PLATE	9540-18	689	LCN

DOOR OPERATION:
DOOR NORMALLY CLOSED AND PUSH PULL OPERATION.
ADA OPENER BY EITHER WALL PLATE ACTUATOR

HARDWARE SET NO. 01E

For use on Door #(s):
B107B

Provide each PR door(s) with the following:

QTY		DESCRIPTION	CATALOG NUMBER	FINISH	MFR
2	EA	CONT. HINGE	112XY	628	IVE
2	EA	DUMMY PUSH BAR	350	626	VON
1	EA	90 DEG OFFSET PULL	8190EZHD 12" O	630-316	IVE
2	EA	OH STOP	100S	630	GLY
2	EA	SURFACE CLOSER	4111 EDA	689	LCN
2	EA	MOUNTING PLATE	4110-18 SRT	689	LCN
2	EA	CUSH SHOE SUPPORT	4110-30 SRT	689	LCN
2	EA	BLADE STOP SPACER	4110-61 SRT	689	LCN

HARDWARE SET NO. 01F

For use on Door #(s):
B121A

Provide each PR door(s) with the following:

QTY		DESCRIPTION	CATALOG NUMBER	FINISH	MFR
1	EA	CONT. HINGE	027XY	628	IVE
1	EA	CONT. HINGE	027XY EPT	628	IVE
1	EA	POWER TRANSFER	EPT10 CON	689	VON
1	EA	REMOVABLE MULLION	KR4954 STAB	689	VON
1	EA	PANIC HARDWARE	LD-98-EO	626	VON
1	EA	ELEC PANIC HARDWARE	RX-QEL-98-NL-OP-110MD-CON 24 VDC	626	VON
1	EA	RIM CYLINDER	12E72 PEAKS	626	BES
1	EA	MORTISE CYLINDER	1E74 PEAKS	626	BES
2	EA	KEYED PERMANENT CORE	SFIC (KEYED TO EXISTING BEST PEAKS SYSTEM)		BES
1	EA	90 DEG OFFSET PULL	8190EZHD 12" O	630-316	IVE
2	EA	OH STOP	100S	630	GLY
2	EA	SURFACE CLOSER	4111 EDA	689	LCN
2	EA	MOUNTING PLATE	4110-18 SRT	689	LCN
2	EA	CUSH SHOE SUPPORT	4110-30 SRT	689	LCN
2	EA	BLADE STOP SPACER	4110-61 SRT	689	LCN
2	EA	DOOR SWEEP	8197AA	AA	ZER
1	EA	THRESHOLD	65A-223	A	ZER
1	EA	WIRE HARNESS	CON-P (LENGTH AS REQUIRED)		VON
1	EA	WIRE HARNESS	CON-6W		VON
2	EA	DOOR POSITION SWITCH	195-12W	WHT	GEO
1	EA	CENTRAL POWER SUPPLY	SPECIFIED IN MISC HARDWARE SET		
1	EA	CARD READER	SPECIFIED BY OTHERS		

HARDWARE SET NO. 01G

For use on Door #(s):
B127D

Provide each PR door(s) with the following:

QTY		DESCRIPTION	CATALOG NUMBER	FINISH	MFR
1	EA	CONT. HINGE	027XY	628	IVE
1	EA	CONT. HINGE	027XY EPT	628	IVE
1	EA	POWER TRANSFER	EPT10 CON	689	VON
1	EA	REMOVABLE MULLION	KR4954 STAB	689	VON
1	EA	PANIC HARDWARE	LD-98-EO	626	VON
1	EA	ELEC PANIC HARDWARE	RX-QEL-98-NL-OP-110MD-CON 24 VDC	626	VON
1	EA	RIM CYLINDER	12E72 PEAKS	626	BES
1	EA	MORTISE CYLINDER	1E74 PEAKS	626	BES
1	EA	90 DEG OFFSET PULL	8190EZHD 12" O	630-316	IVE
2	EA	OH STOP	100S	630	GLY
2	EA	SURFACE CLOSER	4111 EDA	689	LCN
2	EA	MOUNTING PLATE	4110-18 SRT	689	LCN
2	EA	CUSH SHOE SUPPORT	4110-30 SRT	689	LCN
2	EA	BLADE STOP SPACER	4110-61 SRT	689	LCN
1	EA	WIRE HARNESS	CON-P (LENGTH AS REQUIRED)		VON
1	EA	WIRE HARNESS	CON-6W		VON
2	EA	DOOR POSITION SWITCH	195-12W	WHT	GEO
1	EA	CENTRAL POWER SUPPLY	SPECIFIED IN MISC HARDWARE SET		
1	EA	CARD READER	SPECIFIED BY OTHERS		

DOOR OPERATION:
DOOR NORMALLY CLOSED AND LOCKED
ENTRY BY VALID CARD CREDENTIAL OR KEY OVERRIDE
FREE EGRESS FROM INSIDE AT ALL TIMES
DOOR CONTACT AND REQUEST TO EXIT MONITORED BY DIVISION 28

HARDWARE SET NO. 01H

For use on Door #(s):
B124A

Provide each PR door(s) with the following:

QTY		DESCRIPTION	CATALOG NUMBER	FINISH	MFR
2	EA	CONT. HINGE	112XY	628	IVE
1	EA	AUTO FLUSH BOLT	FB31P	630	IVE
1	EA	INSTITUTION LOCK	L9082HD 06A	626	SCH
2	EA	KEYED PERMANENT CORE	SFIC (KEYED TO EXISTING BEST PEAKS SYSTEM)		BES
1	EA	COORDINATOR	COR X FL	628	IVE
2	EA	MOUNTING BRACKET	MB1/MB2 AS REQ'D	BLK	IVE
2	EA	SURFACE CLOSER	4111 SCUSH	689	LCN
2	EA	MOUNTING PLATE	4110-18 SRT	689	LCN
2	EA	CUSH SHOE SUPPORT	4110-30 SRT	689	LCN
2	EA	BLADE STOP SPACER	4110-61 SRT	689	LCN
2	EA	DOOR SWEEP	8197AA	AA	ZER
1	EA	THRESHOLD	566A-223	A	ZER
2	EA	DOOR POSITION SWITCH	195-12W	WHT	GEO

NOTE:
EXISTING FRAME TO REMAIN
VERIFY EXISTING DOOR AND FRAME PREPS FOR COMPATIBILITY OF SPECIFIED HARDWARE
PRIOR TO ORDERING NOTIFY ARCHITECT OF ANY REQUIRED CHANGES TO SPECIFIED HARDWARE BASED ON EXISTING CONDITONS

HARDWARE SET NO. 01J

For use on Door #(s):
D125A E124

Provide each SGL door(s) with the following:

QTY		DESCRIPTION	CATALOG NUMBER	FINISH	MFR
1	EA	CONT. HINGE	027XY EPT	628	IVE
1	EA	POWER TRANSFER	EPT10 CON	689	VON
1	EA	ELEC PANIC HARDWARE	RX-QEL-98-NL-OP-110MD-CON 24 VDC	626	VON
1	EA	RIM CYLINDER	12E72 PEAKS	626	BES
1	EA	90 DEG OFFSET PULL	8190EZHD 12" O	630-316	IVE
1	EA	OH STOP	100S	630	GLY
1	EA	SURFACE CLOSER	4111 EDA	689	LCN
1	EA	MOUNTING PLATE	4110-18 SRT	689	LCN
1	EA	CUSH SHOE SUPPORT	4110-30 SRT	689	LCN
1	EA	BLADE STOP SPACER	4110-61 SRT	689	LCN
1	EA	DOOR SWEEP	8197AA	AA	ZER
1	EA	THRESHOLD	65A-223	A	ZER
1	EA	WIRE HARNESS	CON-P (LENGTH AS REQUIRED)		VON
1	EA	WIRE HARNESS	CON-6W		VON
1	EA	DOOR POSITION SWITCH	195-12W	WHT	GEO
1	EA	CENTRAL POWER SUPPLY	SPECIFIED IN MISC HARDWARE SET		
1	EA	CARD READER	SPECIFIED BY OTHERS		

DOOR OPERATION:
DOOR NORMALLY CLOSED AND LOCKED
ENTRY BY VALID CARD CREDENTIAL, REMOTE RELEASE FROM RECEPTION OR KEY OVERRIDE
FREE EGRESS FROM INSIDE AT ALL TIMES
DOOR CONTACT AND REQUEST TO EXIT MONITORED BY DIVISION 28

HARDWARE SET NO. 01K

For use on Door #(s):
B127C

Provide each PR door(s) with the following:

QTY		DESCRIPTION	CATALOG NUMBER	FINISH	MFR
2	EA	CONT. HINGE	027XY	628	IVE
1	EA	REMOVABLE MULLION	KR4954 STAB	689	VON
2	EA	PANIC HARDWARE	LD-98-EO	626	VON
1	EA	MORTISE CYLINDER	1E74 PEAKS	626	BES
2	EA	OH STOP	100S	630	GLY
2	EA	SURFACE CLOSER	4111 EDA	689	LCN
2	EA	MOUNTING PLATE	4110-18 SRT	689	LCN
2	EA	CUSH SHOE SUPPORT	4110-30 SRT	689	LCN
2	EA	BLADE STOP SPACER	4110-61 SRT	689	LCN
2	EA	DOOR POSITION SWITCH	195-12W	WHT	GEO

DOOR OPERATION:
DOOR CONTACT MONITORED BY DIVISION 28

HARDWARE SET NO. 01L

For use on Door #(s):
B124B C115A

Provide each PR door(s) with the following:

QTY		DESCRIPTION	CATALOG NUMBER	FINISH	MFR
1	EA	CONT. HINGE	112XY	628	IVE
1	EA	CONT. HINGE	112XY EPT	628	IVE
1	EA	POWER TRANSFER	EPT10 CON	689	VON
1	EA	AUTO FLUSH BOLT	FB31P	630	IVE
1	EA	EL MORTISE LOCK	L9095HDEL 06A DPS CON 12/24 VDC	626	SCH
2	EA	KEYED PERMANENT CORE	SFIC (KEYED TO EXISTING BEST PEAKS SYSTEM)		BES
1	EA	COORDINATOR	COR X FL	628	IVE
2	EA	MOUNTING BRACKET	MB1/MB2 AS REQ'D	BLK	IVE
2	EA	SURFACE CLOSER	4111 SCUSH	689	LCN
2	EA	MOUNTING PLATE	4110-18 SRT	689	LCN
2	EA	CUSH SHOE SUPPORT	4110-30 SRT	689	LCN
2	EA	BLADE STOP SPACER	4110-61 SRT	689	LCN
2	EA	DOOR SWEEP	8197AA	AA	ZER
1	EA	THRESHOLD	566A-223	A	ZER
2	EA	WIRE HARNESS	CON-P (LENGTH AS REQUIRED)		VON
2	EA	WIRE HARNESS	CON-6W		VON
2	EA	DOOR POSITION SWITCH	195-12W	WHT	GEO
1	EA	CENTRAL POWER SUPPLY	SPECIFIED IN MISC HARDWARE SET		
	EA	CARD CREDENTIAL READER	SPECIFIED IN DIVISION 28		

DOOR OPERATION:
DOOR NORMALLY CLOSED AND LOCKED
ENTRY/EGRESS BY VALID CARD CREDENTIAL OR KEY OVERRIDE
DOOR CONTACT MONITORED BY DIVISION 28

HARDWARE SET NO. 01M

For use on Door #(s):
E114B

Provide each SGL door(s) with the following:

QTY		DESCRIPTION	CATALOG NUMBER	FINISH	MFR
1	EA	CONT. HINGE	112XY	628	IVE
1	EA	STOREROOM LOCK	9K37D15D - PEAKS CORE	626	BES
1	EA	ELECTRIC STRIKE	6211 FSE 12/16/24/28 VAC/VDC	630	VON
1	EA	LOCK GUARD	LG14	630	IVE
1	EA	SURFACE CLOSER	4111 SCUSH	689	LCN
1	EA	KICK PLATE	8400 8" X 2" LDW B-CS	630	IVE
1	EA	RAIN DRIP	142AA	AA	ZER
1	EA	GASKETING	188SBK PSA	BK	ZER
1	EA	THRESHOLD	566A-223	A	ZER
1	EA	WIRE HARNESS	CON-6W		VON
1	EA	DOOR POSITION SWITCH	195-12W	WHT	GEO
1	EA	MOTION SENSOR	SCANII	BLK	SCE
1	EA	CENTRAL POWER SUPPLY	SPECIFIED IN MISC HARDWARE SET		
	EA	CARD CREDENTIAL READER	SPECIFIED IN DIVISION 28		

DOOR OPERATION:
DOOR NORMALLY CLOSED AND LOCKED
ENTRY BY VALID CARD CREDENTIAL OR KEY OVERRIDE
FREE EGRESS FROM INSIDE AT ALL TIMES
DOOR CONTACT MONITORED BY DIVISION 28

HARDWARE SET NO. 01N

For use on Door #(s):
B106A

Provide each SGL door(s) with the following:

QTY		DESCRIPTION	CATALOG NUMBER	FINISH	MFR
1	EA	CONT. HINGE	027XY EPT	628	IVE
1	EA	POWER TRANSFER	EPT10 CON	689	VON
1	EA	ELEC PANIC HARDWARE	RX-QEL-98-NL-OP-110MD-CON 24 VDC	626	VON
1	EA	RIM CYLINDER	12E72 PEAKS	626	BES
1	EA	90 DEG OFFSET PULL	8190EZHD 12" O	630-316	IVE
1	EA	OH STOP	100S	630	GLY
1	EA	SURFACE CLOSER	4111 EDA	689	LCN
1	EA	MOUNTING PLATE	4110-18 SRT	689	LCN
1	EA	CUSH SHOE SUPPORT	4110-30 SRT	689	LCN
1	EA	BLADE STOP SPACER	4110-61 SRT	689	LCN
1	EA	DOOR SWEEP	8197AA	AA	ZER
1	EA	THRESHOLD	65A-223	A	ZER
1	EA	WIRE HARNESS	CON-P (LENGTH AS REQUIRED)		VON
1	EA	WIRE HARNESS	CON-6W		VON
1	EA	DOOR POSITION SWITCH	195-12W	WHT	GEO
1	EA	DESK MOUNT BUTTON	660-PB	628	SCE
1	EA	CENTRAL POWER SUPPLY	SPECIFIED IN MISC HARDWARE SET		
1	EA	CARD READER	SPECIFIED BY OTHERS		

DOOR OPERATION:
DOOR NORMALLY CLOSED AND LOCKED
ENTRY BY VALID CARD CREDENTIAL, REMOTE RELEASE FROM RECEPTION OR KEY OVERRIDE
FREE EGRESS FROM INSIDE AT ALL TIMES
DOOR CONTACT AND REQUEST TO EXIT MONITORED BY DIVISION 28
DOOR OPERATION:
DOOR NORMALLY CLOSED AND LOCKED
ENTRY BY VALID CARD CREDENTIAL OR KEY OVERRIDE
FREE EGRESS FROM INSIDE AT ALL TIMES
DOOR CONTACT MONITORED BY DIVISION 28

HARDWARE SET NO. 01P

For use on Door #(s):
F105

Provide each SGL door(s) with the following:

QTY		DESCRIPTION	CATALOG NUMBER	FINISH	MFR
1	EA	CONT. HINGE	112XY EPT	628	IVE
1	EA	POWER TRANSFER	EPT10 CON	689	VON
1	EA	ELEC PANIC HARDWARE	RX-QEL-98-NL-OP-110MD-CON 24 VDC	626	VON
1	EA	RIM CYLINDER	12E72 PEAKS	626	BES
1	EA	90 DEG OFFSET PULL	8190EZHD 12" O	630-316	IVE
1	EA	SURFACE CLOSER	4111 SCUSH	689	LCN
1	EA	KICK PLATE	8400 8" X 2" LDW B-CS	630	IVE
1	EA	WIRE HARNESS	CON-P (LENGTH AS REQUIRED)		VON
1	EA	WIRE HARNESS	CON-6W		VON
1	EA	DOOR POSITION SWITCH	195-12W	WHT	GEO
1	EA	CENTRAL POWER SUPPLY	SPECIFIED IN MISC HARDWARE SET		
	EA	CARD CREDENTIAL READER	SPECIFIED IN DIVISION 28		

DOOR OPERATION:
DOOR NORMALLY CLOSED AND LOCKED
ENTRY BY VALID CARD CREDENTIAL OR KEY OVERRIDE
FREE EGRESS FROM INSIDE AT ALL TIMES
DOOR CONTACT AND REQUEST TO EXIT MONITORED BY DIVISION 28

HARDWARE SET NO. 01Q

For use on Door #(s):
B130A

Provide each PR door(s) with the following:

QTY		DESCRIPTION	CATALOG NUMBER	FINISH	MFR
2	EA	DOOR CORD	DC-HD-16	630	LOC
1	EA	RX SWITCH KIT	050251-00		VON
1	EA	EXIT DEVICE CONVERSION KIT	114217 QEL MODULAR CONVERSION KIT		VON
2	EA	DOOR POSITION SWITCH	195-12W	WHT	GEO
1	EA	CENTRAL POWER SUPPLY	SPECIFIED IN MISC HARDWARE SET		
	EA	BALANCE OF HARDWARE	TO REMAIN		

DOOR OPERATION:
DOOR NORMALLY CLOSED AND LOCKED
ENTRY BY VALID CARD CREDENTIAL OR KEY OVERRIDE
FREE EGRESS FROM INSIDE AT ALL TIMES
DOOR CONTACT AND REQUEST TO EXIT MONITORED BY DIVISION 28

HARDWARE SET NO. 01R

For use on Door #(s):
C130A C130B

Provide each SGL door(s) with the following:

QTY		DESCRIPTION	CATALOG NUMBER	FINISH	MFR
1	EA	GATE PIVOT / CLOSER	MAMMOTH 180HD	BLK	LOX
1	EA	POWER TRANSFER	DVK-HD-450	628	LOX
1	EA	ELEC PANIC HARDWARE	OUT-QEL-98-NL-OP-110MD-WH 24 VDC	626	VON
1	EA	EXIT DEVICE PANIC SHIELD	PS3x1S24 (LOCKEY)		
1	EA	RIM CYLINDER	12E72 PEAKS	626	BES
1	EA	DOOR PULL	VR910 NL	630	IVE
1	EA	CENTRAL POWER SUPPLY	SPECIFIED IN MISC HARDWARE SET		

DOOR OPERATION:
DOOR NORMALLY CLOSED AND LOCKED
ENTRY BY VALID CARD CREDENTIAL OR KEY OVERRIDE
FREE EGRESS FROM INSIDE AT ALL TIMES
DOOR CONTACT MONITORED BY DIVISION 28

HARDWARE SET NO. 01S

For use on Door #(s):
B138

Provide each PR door(s) with the following:

QTY		DESCRIPTION	CATALOG NUMBER	FINISH	MFR
1	EA	POWER TRANSFER	EPT10 CON	689	VON
1	EA	RX SWITCH KIT	050251-00		VON
1	EA	EXIT DEVICE CONVERSION KIT	114217 QEL MODULAR CONVERSION KIT		VON
2	EA	DOOR POSITION SWITCH	195-12W	WHT	GEO
1	EA	CENTRAL POWER SUPPLY	SPECIFIED IN MISC HARDWARE SET		
	EA	BALANCE OF HARDWARE	TO REMAIN		

DOOR OPERATION:
DOOR NORMALLY CLOSED AND LOCKED
ENTRY BY VALID CARD CREDENTIAL OR KEY OVERRIDE
FREE EGRESS FROM INSIDE AT ALL TIMES
DOOR CONTACT AND REQUEST TO EXIT MONITORED BY DIVISION 28

HARDWARE SET NO. 01T

For use on Door #(s):
B114B B131 B132C B141

Provide each RU door(s) with the following:

QTY		DESCRIPTION	CATALOG NUMBER	FINISH	MFR
	EA	ALL HARDWARE	FURNISHED BY DOOR PROVIDER		

HARDWARE SET NO. 01U

For use on Door #(s):

A107A	A107B	B114A	B127A	B127B	B132A
C127B	C128A	C128B			

Provide each PR door(s) with the following:

QTY		DESCRIPTION	CATALOG NUMBER	FINISH	MFR
	EA	ALL EXISTING HARDWARE	TO REMAIN		

HARDWARE SET NO. 01V

For use on Door #(s):

B129

Provide each PR door(s) with the following:

QTY		DESCRIPTION	CATALOG NUMBER	FINISH	MFR
1	EA	CONT. HINGE	112XY	628	IVE
1	EA	CONT. HINGE	112XY TWP CON	628	IVE
1	EA	MANUAL FLUSH BOLT	FB458 12"	626	IVE
1	EA	EU MORTISE LOCK	L9092HDEU 06A RX CON 12/24 VDC	626	SCH
1	EA	KEYED PERMANENT CORE	SFIC (KEYED TO EXISTING BEST PEAKS SYSTEM)		BES
1	EA	OH STOP & HOLDER	90H	630	GLY
1	EA	SURFACE CLOSER	4111 SHCUSH	689	LCN
1	EA	THRESHOLD	566A-223	A	ZER
1	EA	WIRE HARNESS	CON-P (LENGTH AS REQUIRED)		VON
1	EA	WIRE HARNESS	CON-6W		VON
2	EA	DOOR POSITION SWITCH	195-12W	WHT	GEO
1	EA	CENTRAL POWER SUPPLY	SPECIFIED IN MISC HARDWARE SET		
	EA	CARD CREDENTIAL READER	SPECIFIED IN DIVISION 28		

DOOR OPERATION:
DOOR NORMALLY CLOSED AND LOCKED
ENTRY BY VALID CARD CREDENTIAL OR KEY OVERRIDE
FREE EGRESS FROM INSIDE AT ALL TIMES
DOOR CONTACT AND REQUEST TO EXIT MONITORED BY DIVISION 28

HARDWARE SET NO. 02A

For use on Door #(s):
D107

Provide each PR door(s) with the following:

QTY		DESCRIPTION	CATALOG NUMBER	FINISH	MFR
2	EA	CONT. HINGE	112XY	628	IVE
1	EA	FIRE EXIT HARDWARE	9827-EO-F-LBRAFL-499F-SLM	626	VON
1	EA	FIRE EXIT HARDWARE	9827-L-BE-F-LBR-06-499F-SLM	626	VON
2	EA	SURFACE CLOSER	4111 EDA	689	LCN
2	EA	MOP PLATE	8400 8" X 1" LDW B-CS	630	IVE
2	EA	FIRE/LIFE WALL MAG	SEM7850 AS REQ (12/24/120V AC/DC TRI-VOLT)	689	LCN
1	EA	GASKETING	188SBK PSA	BK	ZER
1	EA	GASKETING	488SBK PSA	BK	ZER

DOOR OPERATION:
DOORS HELD OPEN ON WALL MAGNETS CONNECTED TO FIRE ALARM SYSTEM.
FIRE ALARM ACTIVATION WILL RELEASE MAGNETS AND ALLOW DOOR TO CLOSE.

HARDWARE SET NO. 02B

For use on Door #(s):
B125

Provide each PR door(s) with the following:

QTY		DESCRIPTION	CATALOG NUMBER	FINISH	MFR
2	EA	CONT. HINGE	112XY	628	IVE
1	EA	PANIC HARDWARE	LD-9827-EO-LBR	626	VON
1	EA	PANIC HARDWARE	LD-9827-L-LBR-06	626	VON
1	EA	RIM CYLINDER	12E72 PEAKS	626	BES
2	EA	SURFACE CLOSER	4111 EDA	689	LCN
2	EA	KICK PLATE	8400 8" X 1" LDW B-CS	630	IVE
2	EA	FIRE/LIFE WALL MAG	SEM7850 AS REQ (12/24/120V AC/DC TRI-VOLT)	689	LCN
2	EA	SILENCER	SR64	GRY	IVE
1	EA	CENTRAL POWER SUPPLY	SPECIFIED IN MISC HARDWARE SET		

NOTE:
EXISTING FRAME TO REMAIN
VERIFY EXISTING DOOR AND FRAME PREPS FOR COMPATIBILITY OF SPECIFIED HARDWARE
PRIOR TO ORDERING NOTIFY ARCHITECT OF ANY REQUIRED CHANGES TO SPECIFIED HARDWARE BASED ON EXISTING CONDITONS

DOOR OPERATION
DOORS HELD OPEN ON WALL MAGNETS CONNECTED TO SECURITY SYSTEM

HARDWARE SET NO. 02C

For use on Door #(s):
C115B

Provide each PR door(s) with the following:

QTY		DESCRIPTION	CATALOG NUMBER	FINISH	MFR
2	EA	CONT. HINGE	112XY	628	IVE
2	EA	DUMMY PUSH BAR	350	626	VON
1	EA	90 DEG OFFSET PULL	8190EZHD 12" O	630-316	IVE
2	EA	SURFACE CLOSER	4111 HCUSH	689	LCN
2	EA	KICK PLATE	8400 8" X 1" LDW B-CS	630	IVE
1	EA	GASKETING	488SBK PSA	BK	ZER
1	EA	MEETING STILE	8217SBK PSA	BK	ZER

HARDWARE SET NO. 02D

For use on Door #(s):
A108 C109 E107

Provide each PR door(s) with the following:

QTY		DESCRIPTION	CATALOG NUMBER	FINISH	MFR
1	EA	CONT. HINGE	112XY	628	IVE
1	EA	CONT. HINGE	112XY EPT	628	IVE
1	EA	POWER TRANSFER	EPT10 CON	689	VON
1	EA	PANIC HARDWARE	LD-9827-EO-LBR	626	VON
1	EA	ELEC PANIC HARDWARE	LD-9827-L-LBR-M996-06-FSE	626	VON
1	EA	RIM CYLINDER	12E72 PEAKS	626	BES
2	EA	SURFACE CLOSER	4111 EDA	689	LCN
2	EA	KICK PLATE	8400 8" X 1" LDW B-CS	630	IVE
2	EA	FIRE/LIFE WALL MAG	SEM7850 AS REQ (12/24/120V AC/DC TRI-VOLT)	689	LCN
2	EA	SILENCER	SR64	GRY	IVE
1	EA	CENTRAL POWER SUPPLY	SPECIFIED IN MISC HARDWARE SET		

DOOR OPERATION:
DOOR NORMALLY CLOSED AND LOCKED
ENTRY BY VALID CARD CREDENTIAL OR KEY OVERRIDE
FREE EGRESS FROM INSIDE AT ALL TIMES
DOOR CONTACT MONITORED BY DIVISION 28
DOORS CAN BE HELD OPEN ON WALL MAGNETS CONTROLLED BY SECURITY LOCKDOWN.

HARDWARE SET NO. 03A

For use on Door #(s):

A101	A102	A103	A104	A105	A109
A110	A111	A112	A113	A114	A118
C101	C102	C103	C104	C105	C106
C107	C108	C114	D105	D108	D109
E101	E105	E106			

Provide each SGL door(s) with the following:

QTY		DESCRIPTION	CATALOG NUMBER	FINISH	MFR
3	EA	HINGE	5BB1 4.5 X 4.5 NRP	652	IVE
1	EA	ELEC OFFICE LOCK	AD-400-CY-50-SI-RHO-B 4AA BATTERY	626	SCE
1	EA	KEYED PERMANENT CORE	SFIC (KEYED TO EXISTING BEST PEAKS SYSTEM)		BES
1	EA	SFIC CONST. CORE	80-035		SCH
1	EA	CUSTOM LOCK STRIKE	VERIFY EXISTING FRAME PREPS	626	ACC
1	EA	SURFACE CLOSER	4111 EDA	689	LCN
1	EA	KICK PLATE	8400 8" X 2" LDW B-CS	630	IVE
1	EA	WALL STOP/HOLDER	WS45/WS45X	626	IVE
3	EA	SILENCER	SR64	GRY	IVE
	EA	PIM	PIM400-485-RSI (FURNISHED BY SECURITY VENDOR)		SCE

NOTE:
EXISTING FRAME TO REMAIN
VERIFY EXISTING DOOR AND FRAME PREPS FOR COMPATIBILITY OF SPECIFIED HARDWARE
PRIOR TO ORDERING NOTIFY ARCHITECT OF ANY REQUIRED CHANGES TO SPECIFIED HARDWARE BASED ON EXISTING CONDITONS
GC TO FURNISH SPACER BLOCKS FOR WALL HOLDER WS45 SIMILAR TO ONES INSTALLED AT LYNNEWOOD ES

DOOR OPERATION:
DOOR NORMALLY LOCKED
ENTRY FROM SECURE SIDE BY VALID CARD CREDENTIAL ON BATTERY POWERED LOCK OR MECHANICAL KEY OVERRIDE.
BUILT IN DOOR POSITION SWITCH AND REQUEST TO EXIT MONITORED BY DIVISION 28
FREE EGRESS FROM INSIDE AT ALL TIMES

HARDWARE SET NO. 03B

For use on Door #(s):

D111	D112	D120	D121	D124	E117
E118	E119	E120	E122	E123	

Provide each SGL door(s) with the following:

QTY		DESCRIPTION	CATALOG NUMBER	FINISH	MFR
3	EA	HINGE	5BB1 4.5 X 4.5 NRP	652	IVE
1	EA	ELEC OFFICE LOCK	AD-400-CY-50-SI-RHO-B 4AA BATTERY	626	SCE
1	EA	KEYED PERMANENT CORE	SFIC (KEYED TO EXISTING BEST PEAKS SYSTEM)		BES
1	EA	SFIC CONST. CORE	80-035		SCH
1	EA	SURFACE CLOSER	4111 EDA	689	LCN
1	EA	KICK PLATE	8400 8" X 2" LDW B-CS	630	IVE
1	EA	WALL STOP/HOLDER	WS45/WS45X	626	IVE
3	EA	SILENCER	SR64	GRY	IVE
	EA	PIM	PIM400-485-RSI (FURNISHED BY SECURITY VENDOR)		SCE

GC TO FURNISH SPACER BLOCKS FOR WALL HOLDER WS45 SIMILAR TO ONES INSTALLED AT LYNNEWOOD ES

DOOR OPERATION:
DOOR NORMALLY LOCKED
ENTRY FROM SECURE SIDE BY VALID CARD CREDENTIAL ON BATTERY POWERED LOCK OR MECHANICAL KEY OVERRIDE.
BUILT IN DOOR POSITION SWITCH AND REQUEST TO EXIT MONITORED BY DIVISION 28
FREE EGRESS FROM INSIDE AT ALL TIMES

HARDWARE SET NO. 03C

For use on Door #(s):

B116B B122 D125B

Provide each SGL door(s) with the following:

QTY		DESCRIPTION	CATALOG NUMBER	FINISH	MFR
3	EA	HINGE	5BB1 4.5 X 4.5 NRP	652	IVE
1	EA	ELEC CLASSROOM LOCK	AD-400-CY-70-SI-RHO-B 4AA BATTERY	626	SCE
1	EA	KEYED PERMANENT CORE	SFIC (KEYED TO EXISTING BEST PEAKS SYSTEM)		BES
1	EA	SFIC CONST. CORE	80-035		SCH
1	EA	CUSTOM LOCK STRIKE	VERIFY EXISTING FRAME PREPS	626	ACC
1	EA	OH STOP	450S	630	GLY
3	EA	SILENCER	SR64	GRY	IVE
	EA	PIM	PIM400-485-RSI (FURNISHED BY SECURITY VENDOR)		SCE

NOTE:
EXISTING DOOR AND FRAME TO REMAIN
VERIFY EXISTING DOOR AND FRAME PREPS FOR COMPATIBILITY OF SPECIFIED HARDWARE
VERIFY EXISTING HINGES, LOCK STRIKE PREP AND FURNISH REQUIRED STRIKE TO FIT.
PRIOR TO ORDERING NOTIFY ARCHITECT OF ANY REQUIRED CHANGES

DOOR OPERATION:
DOOR NORMALLY LOCKED
ENTRY FROM SECURE SIDE BY VALID CARD CREDENTIAL ON BATTERY POWERED LOCK OR MECHANICAL KEY OVERRIDE.
BUILT IN DOOR POSITION SWITCH AND REQUEST TO EXIT MONITORED BY DIVISION 28
FREE EGRESS FROM INSIDE AT ALL TIMES

HARDWARE SET NO. 03D

For use on Door #(s):
B130B

Provide each SGL door(s) with the following:

QTY		DESCRIPTION	CATALOG NUMBER	FINISH	MFR
3	EA	HINGE	5BB1 4.5 X 4.5 NRP	652	IVE
1	EA	ELEC CLASSROOM LOCK	AD-400-CY-70-SI-RHO-B 4AA BATTERY	626	SCE
1	EA	KEYED PERMANENT CORE	SFIC (KEYED TO EXISTING BEST PEAKS SYSTEM)		BES
1	EA	SFIC CONST. CORE	80-035		SCH
1	EA	CUSTOM LOCK STRIKE	VERIFY EXISTING FRAME PREPS	626	ACC
1	EA	SURFACE CLOSER	4111 CUSH	689	LCN
1	EA	KICK PLATE	8400 8" X 2" LDW B-CS	630	IVE
3	EA	SILENCER	SR64	GRY	IVE
	EA	PIM	PIM400-485-RSI (FURNISHED BY SECURITY VENDOR)		SCE

NOTE:
EXISTING FRAME TO REMAIN
VERIFY EXISTING DOOR AND FRAME PREPS FOR COMPATIBILITY OF SPECIFIED HARDWARE
PRIOR TO ORDERING NOTIFY ARCHITECT OF ANY REQUIRED CHANGES TO SPECIFIED HARDWARE BASED ON EXISTING CONDITONS

DOOR OPERATION:
DOOR NORMALLY LOCKED
ENTRY FROM SECURE SIDE BY VALID CARD CREDENTIAL ON BATTERY POWERED LOCK OR MECHANICAL KEY OVERRIDE.
BUILT IN DOOR POSITION SWITCH AND REQUEST TO EXIT MONITORED BY DIVISION 28
FREE EGRESS FROM INSIDE AT ALL TIMES

HARDWARE SET NO. 03E

For use on Door #(s):

C112 C113 C129

Provide each SGL door(s) with the following:

QTY		DESCRIPTION	CATALOG NUMBER	FINISH	MFR
3	EA	HINGE	5BB1 4.5 X 4.5 NRP	652	IVE
1	EA	ELEC CLASSROOM LOCK	AD-400-CY-70-SI-RHO-B 4AA BATTERY	626	SCE
1	EA	KEYED PERMANENT CORE	SFIC (KEYED TO EXISTING BEST PEAKS SYSTEM)		BES
1	EA	SFIC CONST. CORE	80-035		SCH
1	EA	CUSTOM LOCK STRIKE	VERIFY EXISTING FRAME PREPS	626	ACC
1	EA	MOUNTING BRACKET	MB	689	IVE
1	EA	SURFACE CLOSER	4111 EDA	689	LCN
1	EA	KICK PLATE	8400 8" X 2" LDW B-CS	630	IVE
1	EA	WALL STOP/HOLDER	WS45/WS45X	626	IVE
1	EA	GASKETING	870AA-S	AA	ZER
1	EA	DOOR BOTTOM	369AA	AA	ZER
3	EA	SILENCER	SR64	GRY	IVE
	EA	PIM	PIM400-485-RSI (FURNISHED BY SECURITY VENDOR)		SCE

NOTE:
EXISTING FRAME TO REMAIN
VERIFY EXISTING DOOR AND FRAME PREPS FOR COMPATIBILITY OF SPECIFIED HARDWARE
PRIOR TO ORDERING NOTIFY ARCHITECT OF ANY REQUIRED CHANGES TO SPECIFIED HARDWARE BASED ON EXISTING CONDITONS
GC TO FURNISH SPACER BLOCKS FOR WALL HOLDER WS45 SIMILAR TO ONES INSTALLED AT LYNNEWOOD ES
INSTALLATION NOTE:
MOUNT GASKETING PRIOR TO DOOR CLOSER. USE MB MOUNTING BRACKETS AND DROP CLOSER ACCORDINGLY.

DOOR OPERATION:
DOOR NORMALLY LOCKED
ENTRY FROM SECURE SIDE BY VALID CARD CREDENTIAL ON BATTERY POWERED LOCK OR MECHANICAL KEY OVERRIDE.
BUILT IN DOOR POSITION SWITCH AND REQUEST TO EXIT MONITORED BY DIVISION 28
FREE EGRESS FROM INSIDE AT ALL TIMES

HARDWARE SET NO. 03F

For use on Door #(s):
D104

Provide each SGL door(s) with the following:

QTY		DESCRIPTION	CATALOG NUMBER	FINISH	MFR
3	EA	HINGE	5BB1 4.5 X 4.5 NRP	652	IVE
1	EA	ELEC CLASSROOM LOCK	AD-400-CY-70-SI-RHO-B 4AA BATTERY	626	SCE
1	EA	KEYED PERMANENT CORE	SFIC (KEYED TO EXISTING BEST PEAKS SYSTEM)		BES
1	EA	SFIC CONST. CORE	80-035		SCH
1	EA	CUSTOM LOCK STRIKE	VERIFY EXISTING FRAME PREPS	626	ACC
1	EA	OH STOP	450S J	630	GLY
3	EA	SILENCER	SR64	GRY	IVE
	EA	PIM	PIM400-485-RSI (FURNISHED BY SECURITY VENDOR)		SCE

NOTE:
EXISTING DOOR AND FRAME TO REMAIN
VERIFY EXISTING DOOR AND FRAME PREPS FOR COMPATIBILITY OF SPECIFIED HARDWARE
VERIFY EXISTING HINGES, LOCK STRIKE PREP AND FURNISH REQUIRED STRIKE TO FIT.
PRIOR TO ORDERING NOTIFY ARCHITECT OF ANY REQUIRED CHANGES

DOOR OPERATION:
DOOR NORMALLY LOCKED
ENTRY FROM SECURE SIDE BY VALID CARD CREDENTIAL ON BATTERY POWERED LOCK OR MECHANICAL KEY OVERRIDE.
BUILT IN DOOR POSITION SWITCH AND REQUEST TO EXIT MONITORED BY DIVISION 28
FREE EGRESS FROM INSIDE AT ALL TIMES

HARDWARE SET NO. 03G

For use on Door #(s):

A125	A126	A127	A128	A129	A131
A132	B105	B137	C125	F107	F108

Provide each SGL door(s) with the following:

QTY		DESCRIPTION	CATALOG NUMBER	FINISH	MFR
3	EA	HINGE	5BB1 4.5 X 4.5	652	IVE
1	EA	ELEC OFFICE LOCK	AD-400-CY-50-SI-RHO-B 4AA BATTERY	626	SCE
1	EA	KEYED PERMANENT CORE	SFIC (KEYED TO EXISTING BEST PEAKS SYSTEM)		BES
1	EA	SFIC CONST. CORE	80-035		SCH
1	EA	WALL STOP	WS406/407CCV	630	IVE
1	EA	GASKETING	488SBK PSA	BK	ZER
	EA	PIM	PIM400-485-RSI (FURNISHED BY SECURITY VENDOR)		SCE

DOOR OPERATION:
DOOR NORMALLY LOCKED
ENTRY FROM SECURE SIDE BY VALID CARD CREDENTIAL ON BATTERY POWERED LOCK OR MECHANICAL KEY OVERRIDE.
BUILT IN DOOR POSITION SWITCH AND REQUEST TO EXIT MONITORED BY DIVISION 28
FREE EGRESS FROM INSIDE AT ALL TIMES

HARDWARE SET NO. 03H

For use on Door #(s):
B133

Provide each SGL door(s) with the following:

QTY		DESCRIPTION	CATALOG NUMBER	FINISH	MFR
3	EA	HINGE	5BB1 4.5 X 4.5	652	IVE
1	EA	ELEC CLASSROOM LOCK	AD-400-CY-70-SI-RHO-B 4AA BATTERY	626	SCE
1	EA	KEYED PERMANENT CORE	SFIC (KEYED TO EXISTING BEST PEAKS SYSTEM)		BES
1	EA	SFIC CONST. CORE	80-035		SCH
1	EA	KICK PLATE	8400 8" X 2" LDW B-CS	630	IVE
1	EA	WALL STOP	WS406/407CCV	630	IVE
1	EA	DOOR SWEEP - RODENT PROOF	XCL-12101036 Xcluder	689	
3	EA	SILENCER	SR64	GRY	IVE
	EA	PIM	PIM400-485-RSI (FURNISHED BY SECURITY VENDOR)		SCE

DOOR OPERATION:
DOOR NORMALLY LOCKED
ENTRY FROM SECURE SIDE BY VALID CARD CREDENTIAL ON BATTERY POWERED LOCK OR MECHANICAL KEY OVERRIDE.
BUILT IN DOOR POSITION SWITCH AND REQUEST TO EXIT MONITORED BY DIVISION 28
FREE EGRESS FROM INSIDE AT ALL TIMES

HARDWARE SET NO. 03J

For use on Door #(s):

A119 A121 B103

Provide each SGL door(s) with the following:

QTY		DESCRIPTION	CATALOG NUMBER	FINISH	MFR
3	EA	HINGE	5BB1 4.5 X 4.5	652	IVE
1	EA	ELEC CLASSROOM LOCK	AD-400-CY-70-SI-RHO-B 4AA BATTERY	626	SCE
1	EA	KEYED PERMANENT CORE	SFIC (KEYED TO EXISTING BEST PEAKS SYSTEM)		BES
1	EA	SFIC CONST. CORE	80-035		SCH
1	EA	WALL STOP	WS406/407CCV	630	IVE
3	EA	SILENCER	SR64	GRY	IVE
	EA	PIM	PIM400-485-RSI (FURNISHED BY SECURITY VENDOR)		SCE

DOOR OPERATION:
DOOR NORMALLY LOCKED
ENTRY FROM SECURE SIDE BY VALID CARD CREDENTIAL ON BATTERY POWERED LOCK OR MECHANICAL KEY OVERRIDE.
BUILT IN DOOR POSITION SWITCH AND REQUEST TO EXIT MONITORED BY DIVISION 28
FREE EGRESS FROM INSIDE AT ALL TIMES

HARDWARE SET NO. 03K

For use on Door #(s):

A117 A122 B115 B116A

Provide each SGL door(s) with the following:

QTY		DESCRIPTION	CATALOG NUMBER	FINISH	MFR
3	EA	HINGE	5BB1 4.5 X 4.5 NRP	652	IVE
1	EA	ELEC CLASSROOM LOCK	AD-400-CY-70-SI-RHO-B 4AA BATTERY	626	SCE
1	EA	KEYED PERMANENT CORE	SFIC (KEYED TO EXISTING BEST PEAKS SYSTEM)		BES
1	EA	SFIC CONST. CORE	80-035		SCH
1	EA	SURFACE CLOSER	4111 HCUSH	689	LCN
1	EA	KICK PLATE	8400 8" X 2" LDW B-CS	630	IVE
3	EA	SILENCER	SR64	GRY	IVE
	EA	PIM	PIM400-485-RSI (FURNISHED BY SECURITY VENDOR)		SCE

DOOR OPERATION:
DOOR NORMALLY LOCKED
ENTRY FROM SECURE SIDE BY VALID CARD CREDENTIAL ON BATTERY POWERED LOCK OR MECHANICAL KEY OVERRIDE.
BUILT IN DOOR POSITION SWITCH AND REQUEST TO EXIT MONITORED BY DIVISION 28
FREE EGRESS FROM INSIDE AT ALL TIMES

HARDWARE SET NO. 03L

For use on Door #(s):

B101 B111 B126A

Provide each SGL door(s) with the following:

QTY		DESCRIPTION	CATALOG NUMBER	FINISH	MFR
3	EA	HINGE	5BB1 4.5 X 4.5 NRP	652	IVE
1	EA	ELEC OFFICE LOCK	AD-400-CY-50-SI-RHO-B 4AA BATTERY	626	SCE
1	EA	KEYED PERMANENT CORE	SFIC (KEYED TO EXISTING BEST PEAKS SYSTEM)		BES
1	EA	SFIC CONST. CORE	80-035		SCH
1	EA	SURFACE CLOSER	4111 HCUSH	689	LCN
1	EA	KICK PLATE	8400 8" X 2" LDW B-CS	630	IVE
1	EA	GASKETING	488SBK PSA	BK	ZER
	EA	PIM	PIM400-485-RSI (FURNISHED BY SECURITY VENDOR)		SCE

NOTE:
EXISTING FRAME TO REMAIN
VERIFY EXISTING DOOR AND FRAME PREPS FOR COMPATIBILITY OF SPECIFIED HARDWARE
PRIOR TO ORDERING NOTIFY ARCHITECT OF ANY REQUIRED CHANGES TO SPECIFIED HARDWARE BASED ON EXISTING CONDITONS

DOOR OPERATION:
DOOR NORMALLY LOCKED
ENTRY FROM SECURE SIDE BY VALID CARD CREDENTIAL ON BATTERY POWERED LOCK OR MECHANICAL KEY OVERRIDE.
BUILT IN DOOR POSITION SWITCH AND REQUEST TO EXIT MONITORED BY DIVISION 28
FREE EGRESS FROM INSIDE AT ALL TIMES

HARDWARE SET NO. 03M

For use on Door #(s):
B132B C127A

Provide each PR door(s) with the following:

QTY		DESCRIPTION	CATALOG NUMBER	FINISH	MFR
6	EA	HINGE	5BB1 4.5 X 4.5 NRP	652	IVE
1	EA	MANUAL FLUSH BOLT	FB358/FB458 AS REQ	626	IVE
1	EA	ELEC CLASSROOM LOCK	AD-400-CY-70-SI-RHO-B 4AA BATTERY	626	SCE
1	EA	KEYED PERMANENT CORE	SFIC (KEYED TO EXISTING BEST PEAKS SYSTEM)		BES
1	EA	SFIC CONST. CORE	80-035		SCH
1	EA	OH STOP	90S	630	GLY
1	EA	SURFACE CLOSER	4111 HCUSH	689	LCN
2	EA	KICK PLATE	8400 8" X 1" LDW B-CS	630	IVE
2	EA	SILENCER	SR64	GRY	IVE
	EA	PIM	PIM400-485-RSI (FURNISHED BY SECURITY VENDOR)		SCE
	EA	OVERLAPPING Z ASTRAGAL	BY DOOR MANUFACTURER		B/O

DOOR OPERATION:
DOOR NORMALLY LOCKED
ENTRY FROM SECURE SIDE BY VALID CARD CREDENTIAL ON BATTERY POWERED LOCK OR MECHANICAL KEY OVERRIDE.
BUILT IN DOOR POSITION SWITCH AND REQUEST TO EXIT MONITORED BY DIVISION 28
FREE EGRESS FROM INSIDE AT ALL TIMES

HARDWARE SET NO. 03N

For use on Door #(s):

A120 C111 C123 E116

Provide each SGL door(s) with the following:

QTY		DESCRIPTION	CATALOG NUMBER	FINISH	MFR
3	EA	HINGE	5BB1 4.5 X 4.5	652	IVE
1	EA	ELEC OFFICE LOCK	AD-400-CY-50-SI-RHO-B 4AA BATTERY	626	SCE
1	EA	KEYED PERMANENT CORE	SFIC (KEYED TO EXISTING BEST PEAKS SYSTEM)		BES
1	EA	SFIC CONST. CORE	80-035		SCH
1	EA	CUSTOM LOCK STRIKE	VERIFY EXISTING FRAME PREPS *	626	ACC
1	EA	SURFACE CLOSER	4011	689	LCN
1	EA	KICK PLATE	8400 8" X 2" LDW B-CS	630	IVE
1	EA	WALL STOP	WS406/407CCV	630	IVE
3	EA	SILENCER	SR64	GRY	IVE
	EA	PIM	PIM400-485-RSI (FURNISHED BY SECURITY VENDOR)		SCE

NOTE:
EXISTING FRAME TO REMAIN
VERIFY EXISTING DOOR AND FRAME PREPS FOR COMPATIBILITY OF SPECIFIED HARDWARE
PRIOR TO ORDERING NOTIFY ARCHITECT OF ANY REQUIRED CHANGES TO SPECIFIED HARDWARE BASED ON EXISTING CONDITONS
*OMIT AT NEW OPENINGS

DOOR OPERATION:
DOOR NORMALLY LOCKED
ENTRY FROM SECURE SIDE BY VALID CARD CREDENTIAL ON BATTERY POWERED LOCK OR MECHANICAL KEY OVERRIDE.
BUILT IN DOOR POSITION SWITCH AND REQUEST TO EXIT MONITORED BY DIVISION 28
FREE EGRESS FROM INSIDE AT ALL TIMES

HARDWARE SET NO. 03P

For use on Door #(s):
D119

Provide each SGL door(s) with the following:

QTY		DESCRIPTION	CATALOG NUMBER	FINISH	MFR
3	EA	HINGE	5BB1 4.5 X 4.5	652	IVE
1	EA	ELEC CLASSROOM LOCK	AD-400-CY-70-SI-RHO-B 4AA BATTERY	626	SCE
1	EA	KEYED PERMANENT CORE	SFIC (KEYED TO EXISTING BEST PEAKS SYSTEM)		BES
1	EA	SFIC CONST. CORE	80-035		SCH
1	EA	SURFACE CLOSER	4011	689	LCN
1	EA	KICK PLATE	8400 8" X 2" LDW B-CS	630	IVE
1	EA	WALL STOP/HOLDER	WS45/WS45X	626	IVE
3	EA	SILENCER	SR64	GRY	IVE
	EA	PIM	PIM400-485-RSI (FURNISHED BY SECURITY VENDOR)		SCE

GC FURNISH SPACER BLOCKS FOR WALL HOLDER WS45 SIMILAR TO ONES INSTALLED AT LYNNEWOOD ES

DOOR OPERATION:
DOOR NORMALLY LOCKED
ENTRY FROM SECURE SIDE BY VALID CARD CREDENTIAL ON BATTERY POWERED LOCK OR MECHANICAL KEY OVERRIDE.
BUILT IN DOOR POSITION SWITCH AND REQUEST TO EXIT MONITORED BY DIVISION 28
FREE EGRESS FROM INSIDE AT ALL TIMES

HARDWARE SET NO. 03Q

For use on Door #(s):
C110

Provide each SGL door(s) with the following:

QTY		DESCRIPTION	CATALOG NUMBER	FINISH	MFR
3	EA	HINGE	5BB1 4.5 X 4.5 NRP	652	IVE
1	EA	ELEC CLASSROOM LOCK	AD-400-CY-70-SI-RHO-B 4AA BATTERY	626	SCE
1	EA	KEYED PERMANENT CORE	SFIC (KEYED TO EXISTING BEST PEAKS SYSTEM)		BES
1	EA	SFIC CONST. CORE	80-035		SCH
1	EA	OH STOP	450S	630	GLY
3	EA	SILENCER	SR64	GRY	IVE
	EA	PIM	PIM400-485-RSI (FURNISHED BY SECURITY VENDOR)		SCE

DOOR OPERATION:
DOOR NORMALLY LOCKED
ENTRY FROM SECURE SIDE BY VALID CARD CREDENTIAL ON BATTERY POWERED LOCK OR MECHANICAL KEY OVERRIDE.
BUILT IN DOOR POSITION SWITCH AND REQUEST TO EXIT MONITORED BY DIVISION 28
FREE EGRESS FROM INSIDE AT ALL TIMES

HARDWARE SET NO. 03R

For use on Door #(s):
C119

Provide each SGL door(s) with the following:

QTY		DESCRIPTION	CATALOG NUMBER	FINISH	MFR
1	EA	CONT. HINGE	112XY	628	IVE
1	EA	ELEC CLASSROOM LOCK	AD-400-CY-70-SI-RHO-B 4AA BATTERY	626	SCE
1	EA	KEYED PERMANENT CORE	SFIC (KEYED TO EXISTING BEST PEAKS SYSTEM)		BES
1	EA	SFIC CONST. CORE	80-035		SCH
1	EA	SURFACE CLOSER	4011	689	LCN
1	EA	KICK PLATE	8400 8" X 2" LDW B-CS	630	IVE
1	EA	WALL STOP/HOLDER	WS45/WS45X	626	IVE
3	EA	SILENCER	SR64	GRY	IVE
	EA	PIM	PIM400-485-RSI (FURNISHED BY SECURITY VENDOR)		SCE

GC TO FURNISH SPACER BLOCKS FOR WALL HOLDER WS45 SIMILAR TO ONES INSTALLED AT LYNNEWOOD ES
INSTALLATION NOTE:

DOOR OPERATION:
DOOR NORMALLY LOCKED
ENTRY FROM SECURE SIDE BY VALID CARD CREDENTIAL ON BATTERY POWERED LOCK OR MECHANICAL KEY OVERRIDE.
BUILT IN DOOR POSITION SWITCH AND REQUEST TO EXIT MONITORED BY DIVISION 28
FREE EGRESS FROM INSIDE AT ALL TIMES

HARDWARE SET NO. 03S

For use on Door #(s):
C121

Provide each PR door(s) with the following:

QTY		DESCRIPTION	CATALOG NUMBER	FINISH	MFR
6	EA	HINGE	5BB1 4.5 X 4.5 NRP	652	IVE
1	EA	MANUAL FLUSH BOLT	FB358/FB458 AS REQ	626	IVE
1	EA	ELEC CLASSROOM LOCK	AD-400-CY-70-SI-RHO-B 4AA BATTERY	626	SCE
1	EA	KEYED PERMANENT CORE	SFIC (KEYED TO EXISTING BEST PEAKS SYSTEM)		BES
1	EA	SFIC CONST. CORE	80-035		SCH
1	EA	OH STOP	90S	630	GLY
1	EA	SURFACE CLOSER	4111 HCUSH	689	LCN
2	EA	KICK PLATE	8400 8" X 1" LDW B-CS	630	IVE
2	EA	SILENCER	SR64	GRY	IVE
	EA	PIM	PIM400-485-RSI (FURNISHED BY SECURITY VENDOR)		SCE
	EA	OVERLAPPING Z ASTRAGAL	BY DOOR MANUFACTURER		B/O

DOOR OPERATION:
DOOR NORMALLY LOCKED
ENTRY FROM SECURE SIDE BY VALID CARD CREDENTIAL ON BATTERY POWERED LOCK OR MECHANICAL KEY OVERRIDE.
BUILT IN DOOR POSITION SWITCH AND REQUEST TO EXIT MONITORED BY DIVISION 28
FREE EGRESS FROM INSIDE AT ALL TIMES

HARDWARE SET NO. 03T

For use on Door #(s):

A133	B134	B136	C122	D103	D113
D116	D122	E109	E112	E113	E114A
E115					

Provide each SGL door(s) with the following:

QTY		DESCRIPTION	CATALOG NUMBER	FINISH	MFR
3	EA	HINGE	5BB1 4.5 X 4.5	652	IVE
1	EA	ELEC CLASSROOM LOCK	AD-400-CY-70-SI-RHO-B 4AA BATTERY	626	SCE
1	EA	KEYED PERMANENT CORE	SFIC (KEYED TO EXISTING BEST PEAKS SYSTEM)		BES
1	EA	SFIC CONST. CORE	80-035		SCH
1	EA	SURFACE CLOSER	4011	689	LCN
1	EA	KICK PLATE	8400 8" X 2" LDW B-CS	630	IVE
1	EA	WALL STOP	WS406/407CCV	630	IVE
3	EA	SILENCER	SR64	GRY	IVE
	EA	PIM	PIM400-485-RSI (FURNISHED BY SECURITY VENDOR)		SCE

DOOR OPERATION:
DOOR NORMALLY LOCKED
ENTRY FROM SECURE SIDE BY VALID CARD CREDENTIAL ON BATTERY POWERED LOCK OR MECHANICAL KEY OVERRIDE.
BUILT IN DOOR POSITION SWITCH AND REQUEST TO EXIT MONITORED BY DIVISION 28
FREE EGRESS FROM INSIDE AT ALL TIMES

HARDWARE SET NO. 03U

For use on Door #(s):
B102

Provide each SGL door(s) with the following:

QTY		DESCRIPTION	CATALOG NUMBER	FINISH	MFR
3	EA	HINGE	5BB1 4.5 X 4.5	652	IVE
1	EA	ELEC CLASSROOM LOCK	AD-400-CY-70-SI-RHO-B 4AA BATTERY	626	SCE
1	EA	KEYED PERMANENT CORE	SFIC (KEYED TO EXISTING BEST PEAKS SYSTEM)		BES
1	EA	SFIC CONST. CORE	80-035		SCH
1	EA	OH STOP	450S J	630	GLY
3	EA	SILENCER	SR64	GRY	IVE
	EA	PIM	PIM400-485-RSI (FURNISHED BY SECURITY VENDOR)		SCE

DOOR OPERATION:
DOOR NORMALLY LOCKED
ENTRY FROM SECURE SIDE BY VALID CARD CREDENTIAL ON BATTERY POWERED LOCK OR MECHANICAL KEY OVERRIDE.
BUILT IN DOOR POSITION SWITCH AND REQUEST TO EXIT MONITORED BY DIVISION 28
FREE EGRESS FROM INSIDE AT ALL TIMES

HARDWARE SET NO. 03V

For use on Door #(s):
E104

Provide each SGL door(s) with the following:

QTY		DESCRIPTION	CATALOG NUMBER	FINISH	MFR
3	EA	HINGE	5BB1 4.5 X 4.5	652	IVE
1	EA	ELEC CLASSROOM LOCK	AD-400-CY-70-SI-RHO-B 4AA BATTERY	626	SCE
1	EA	KEYED PERMANENT CORE	SFIC (KEYED TO EXISTING BEST PEAKS SYSTEM)		BES
1	EA	SFIC CONST. CORE	80-035		SCH
1	EA	CUSTOM LOCK STRIKE	VERIFY EXISTING FRAME PREPS	626	ACC
1	EA	SURFACE CLOSER	4011	689	LCN
1	EA	KICK PLATE	8400 8" X 2" LDW B-CS	630	IVE
1	EA	WALL STOP/HOLDER	WS45/WS45X	626	IVE
3	EA	SILENCER	SR64	GRY	IVE
	EA	PIM	PIM400-485-RSI (FURNISHED BY SECURITY VENDOR)		SCE

GC FURNISH SPACER BLOCKS FOR WALL HOLDER WS45 SIMILAR TO ONES INSTALLED AT LYNNEWOOD ESNOTE:
EXISTING FRAME TO REMAIN
VERIFY EXISTING DOOR AND FRAME PREPS FOR COMPATIBILITY OF SPECIFIED HARDWARE
PRIOR TO ORDERING NOTIFY ARCHITECT OF ANY REQUIRED CHANGES TO SPECIFIED HARDWARE BASED ON EXISTING CONDITONS

DOOR OPERATION:
DOOR NORMALLY LOCKED
ENTRY FROM SECURE SIDE BY VALID CARD CREDENTIAL ON BATTERY POWERED LOCK OR MECHANICAL KEY OVERRIDE.
BUILT IN DOOR POSITION SWITCH AND REQUEST TO EXIT MONITORED BY DIVISION 28
FREE EGRESS FROM INSIDE AT ALL TIMES

HARDWARE SET NO. 03W

For use on Door #(s):
B119

Provide each SGL door(s) with the following:

QTY		DESCRIPTION	CATALOG NUMBER	FINISH	MFR
3	EA	HINGE	5BB1 4.5 X 4.5	652	IVE
1	EA	ELEC OFFICE LOCK	AD-400-CY-50-SI-RHO-B 4AA BATTERY	626	SCE
1	EA	KEYED PERMANENT CORE	SFIC (KEYED TO EXISTING BEST PEAKS SYSTEM)		BES
1	EA	SFIC CONST. CORE	80-035		SCH
1	EA	OH STOP & HOLDER	410H	630	GLY
1	EA	SURFACE CLOSER	4011 ST-1544	689	LCN
1	EA	MOUNTING PLATE	4010-18 SRT	689	LCN
1	EA	KICK PLATE	8400 8" X 2" LDW B-CS	630	IVE
1	EA	WALL STOP/HOLDER	WS45/WS45X	626	IVE
3	EA	SILENCER	SR64	GRY	IVE
	EA	PIM	PIM400-485-RSI (FURNISHED BY SECURITY VENDOR)		SCE

GC FURNISH SPACER BLOCKS FOR WALL HOLDER WS45 SIMILAR TO ONES INSTALLED AT LYNNEWOOD ES

DOOR OPERATION:
DOOR NORMALLY LOCKED
ENTRY FROM SECURE SIDE BY VALID CARD CREDENTIAL ON BATTERY POWERED LOCK OR MECHANICAL KEY OVERRIDE.
BUILT IN DOOR POSITION SWITCH AND REQUEST TO EXIT MONITORED BY DIVISION 28
FREE EGRESS FROM INSIDE AT ALL TIMES

HARDWARE SET NO. 03X

For use on Door #(s):

C120 D101 D102

Provide each SGL door(s) with the following:

QTY		DESCRIPTION	CATALOG NUMBER	FINISH	MFR
3	EA	HINGE	5BB1 4.5 X 4.5 NRP	652	IVE
1	EA	ELEC CLASSROOM LOCK	AD-400-CY-70-SI-RHO-B 4AA BATTERY	626	SCE
1	EA	KEYED PERMANENT CORE	SFIC (KEYED TO EXISTING BEST PEAKS SYSTEM)		BES
1	EA	SFIC CONST. CORE	80-035		SCH
1	EA	CUSTOM LOCK STRIKE	VERIFY EXISTING FRAME PREPS	626	ACC
1	EA	SURFACE CLOSER	4111 HCUSH (TEMPALTE FOR MAXIMUM DEGREE HOLD OPEN	689	LCN
1	EA	KICK PLATE	8400 8" X 2" LDW B-CS	630	IVE
3	EA	SILENCER	SR64	GRY	IVE
	EA	PIM	PIM400-485-RSI (FURNISHED BY SECURITY VENDOR)		SCE

NOTE:
EXISTING FRAME TO REMAIN
VERIFY EXISTING DOOR AND FRAME PREPS FOR COMPATIBILITY OF SPECIFIED HARDWARE
PRIOR TO ORDERING NOTIFY ARCHITECT OF ANY REQUIRED CHANGES TO SPECIFIED HARDWARE BASED ON EXISTING CONDITONS

DOOR OPERATION:
DOOR NORMALLY LOCKED
ENTRY FROM SECURE SIDE BY VALID CARD CREDENTIAL ON BATTERY POWERED LOCK OR MECHANICAL KEY OVERRIDE.
BUILT IN DOOR POSITION SWITCH AND REQUEST TO EXIT MONITORED BY DIVISION 28
FREE EGRESS FROM INSIDE AT ALL TIMES

HARDWARE SET NO. 03Y

For use on Door #(s):
B142

Provide each SGL door(s) with the following:

QTY		DESCRIPTION	CATALOG NUMBER	FINISH	MFR
3	EA	HINGE	5BB1 4.5 X 4.5	652	IVE
1	EA	ELEC CLASSROOM LOCK	AD-400-CY-70-SI-RHO-B 4AA BATTERY	626	SCE
1	EA	KEYED PERMANENT CORE	SFIC (KEYED TO EXISTING BEST PEAKS SYSTEM)		BES
1	EA	SFIC CONST. CORE	80-035		SCH
1	EA	KICK PLATE	8400 8" X 2" LDW B-CS	630	IVE
1	EA	WALL STOP	WS406/407CCV	630	IVE
3	EA	SILENCER	SR64	GRY	IVE
	EA	PIM	PIM400-485-RSI (FURNISHED BY SECURITY VENDOR)		SCE

DOOR OPERATION:
DOOR NORMALLY LOCKED
ENTRY FROM SECURE SIDE BY VALID CARD CREDENTIAL ON BATTERY POWERED LOCK OR MECHANICAL KEY OVERRIDE.
BUILT IN DOOR POSITION SWITCH AND REQUEST TO EXIT MONITORED BY DIVISION 28
FREE EGRESS FROM INSIDE AT ALL TIMES

HARDWARE SET NO. 04A

For use on Door #(s):
B106B

Provide each SGL door(s) with the following:

QTY		DESCRIPTION	CATALOG NUMBER	FINISH	MFR
3	EA	HINGE	5BB1 4.5 X 4.5 NRP	652	IVE
1	EA	STOREROOM LOCK	9K37D15D - PEAKS CORE	626	BES
1	EA	ELECTRIC STRIKE	6211 FSE 12/16/24/28 VAC/VDC	630	VON
1	EA	SURFACE CLOSER	4111 CUSH	689	LCN
1	EA	KICK PLATE	8400 8" X 2" LDW B-CS	630	IVE
1	EA	GASKETING	488SBK PSA	BK	ZER
1	EA	WIRE HARNESS	CON-6W		VON
1	EA	DOOR POSITION SWITCH	195-12W	WHT	GEO
1	EA	MOTION SENSOR	SCANII	BLK	SCE
1	EA	CENTRAL POWER SUPPLY	SPECIFIED IN MISC HARDWARE SET		
1	EA	CARD READER	SPECIFIED BY OTHERS		

DOOR OPERATION:
DOOR NORMALLY CLOSED AND LOCKED
ENTRY BY VALID CARD CREDENTIAL OR KEY OVERRIDE
FREE EGRESS FROM INSIDE AT ALL TIMES
DOOR CONTACT AND REQUEST TO EXIT MONITORED BY DIVISION 28

HARDWARE SET NO. 04B

For use on Door #(s):
B104

Provide each SGL door(s) with the following:

QTY		DESCRIPTION	CATALOG NUMBER	FINISH	MFR
3	EA	HINGE	5BB1 4.5 X 4.5 NRP	652	IVE
1	EA	INSTITUTIONAL LOCK	9K37W15D - PEAKS CORE	626	BES
1	EA	ELECTRIC STRIKE	6211 FSE 12/16/24/28 VAC/VDC	630	VON
1	EA	SURFACE CLOSER	4111 CUSH	689	LCN
1	EA	KICK PLATE	8400 8" X 2" LDW B-CS	630	IVE
1	EA	GASKETING	488SBK PSA	BK	ZER
1	EA	MOTION SENSOR	SCANII	BLK	SCE
1	EA	CENTRAL POWER SUPPLY	SPECIFIED IN MISC HARDWARE SET		
2	EA	CARD READER	SPECIFIED BY OTHERS		

DOOR OPERATION:
KEY EITHER SIDE WILL LOCK OR UNLOCK LEVERS ON BOTH SIDES. WHEN LEVERS ARE LOCKED, CARD READER EITHER SIDE WILL MOMENTARILY RELEASE ELECTRIC STRIKE AND ALLOW ACCESS. DOOR WILL REMAIN LOCKED ON LOSS OF POWER.

HARDWARE SET NO. 04C

For use on Door #(s):
B110

Provide each SGL door(s) with the following:

QTY		DESCRIPTION	CATALOG NUMBER	FINISH	MFR
3	EA	HINGE	5BB1 4.5 X 4.5 NRP	652	IVE
1	EA	INSTITUTIONAL LOCK	9K37W15D - PEAKS CORE	626	BES
1	EA	ELECTRIC STRIKE	6211 FSE 12/16/24/28 VAC/VDC	630	VON
1	EA	SURFACE CLOSER	4111 EDA	689	LCN
1	EA	KICK PLATE	8400 8" X 2" LDW B-CS	630	IVE
1	EA	GASKETING	488SBK PSA	BK	ZER
1	EA	WIRE HARNESS	CON-6W		VON
1	EA	DOOR POSITION SWITCH	195-12W	WHT	GEO
1	EA	CENTRAL POWER SUPPLY	SPECIFIED IN MISC HARDWARE SET		
	EA	CARD CREDENTIAL READER	SPECIFIED IN DIVISION 28		

DOOR OPERATION:
DOOR NORMALLY CLOSED AND LOCKED FROM BOTH DIRECTIONS
ENTRY BY VALID CARD CREDENTIAL OR KEY OVERRIDE FROM EITHER SIDE
DOOR CONTACT MONITORED BY DIVISION 28

HARDWARE SET NO. 05A

For use on Door #(s):
B109

Provide each SGL door(s) with the following:

QTY		DESCRIPTION	CATALOG NUMBER	FINISH	MFR
3	EA	HINGE	5BB1 4.5 X 4.5	652	IVE
1	EA	PASSAGE LOCK	9K30N15D	626	BES
1	EA	WALL STOP	WS406/407CCV	630	IVE
1	EA	GASKETING	488SBK PSA	BK	ZER

HARDWARE SET NO. 05B

For use on Door #(s):
B126B

Provide each SGL door(s) with the following:

QTY		DESCRIPTION	CATALOG NUMBER	FINISH	MFR
3	EA	HINGE	5BB1 4.5 X 4.5	652	IVE
1	EA	PASSAGE LOCK	9K30N15D	626	BES
1	EA	OH STOP	450S	630	GLY
1	EA	GASKETING	488SBK PSA	BK	ZER

HARDWARE SET NO. 06A

For use on Door #(s):
B124C

Provide each PR door(s) with the following:

QTY		DESCRIPTION	CATALOG NUMBER	FINISH	MFR
2	EA	CONT. HINGE	112XY	628	IVE
2	EA	PANIC HARDWARE	LD-9827-EO-LBR	626	VON
1	EA	ELEC EXIT DEVICE TRIM	AD-400-993R-70-SI-RHO-B 4AA BATTERY	626	SCE
1	EA	KEYED PERMANENT CORE	SFIC (KEYED TO EXISTING BEST PEAKS SYSTEM)		BES
1	EA	SFIC CONST. CORE	80-035		SCH
2	EA	SURFACE CLOSER	4111 HCUSH	689	LCN
2	EA	KICK PLATE	8400 8" X 1" LDW B-CS	630	IVE
1	EA	GASKETING	488SBK PSA	BK	ZER
2	EA	MEETING STILE	8217SBK PSA	BK	ZER
	EA	PIM	PIM400-485-RSI (FURNISHED BY SECURITY VENDOR)		SCE

HARDWARE SET NO. 06B

For use on Door #(s):

B121B B123A B123B B123C

Provide each PR door(s) with the following:

QTY		DESCRIPTION	CATALOG NUMBER	FINISH	MFR
1	EA	CONT. HINGE	112XY	628	IVE
1	EA	CONT. HINGE	112XY EPT	628	IVE
1	EA	POWER TRANSFER	EPT10 CON	689	VON
1	EA	REMOVABLE MULLION	KR4954 STAB	689	VON
1	EA	PANIC HARDWARE	LD-98-EO	626	VON
1	EA	ELEC PANIC HARDWARE	RX-QEL-98-NL-OP-110MD 24 VDC	626	VON
1	EA	RIM CYLINDER	12E72 PEAKS	626	BES
1	EA	MORTISE CYLINDER	1E74 PEAKS	626	BES
1	EA	90 DEG OFFSET PULL	8190EZHD 12" O	630-316	IVE
2	EA	SURFACE CLOSER	4111 HCUSH	689	LCN
2	EA	KICK PLATE	8400 8" X 2" LDW B-CS	630	IVE
1	EA	MULLION SEAL	8780NBK PSA	BK	ZER
2	EA	SILENCER	SR64	GRY	IVE
1	EA	WIRE HARNESS	CON-P (LENGTH AS REQUIRED)		VON
1	EA	WIRE HARNESS	CON-6W		VON
2	EA	DOOR POSITION SWITCH	195-12W	WHT	GEO
1	EA	CENTRAL POWER SUPPLY	SPECIFIED IN MISC HARDWARE SET		
	EA	CARD CREDENTIAL READER	SPECIFIED IN DIVISION 28		

DOOR OPERATION:
DOOR NORMALLY CLOSED AND LOCKED
ENTRY BY VALID CARD CREDENTIAL OR KEY OVERRIDE
FREE EGRESS FROM INSIDE AT ALL TIMES
DOOR CONTACT MONITORED BY DIVISION 28

HARDWARE SET NO. 06C

For use on Door #(s):
C124A

Provide each PR door(s) with the following:

QTY		DESCRIPTION	CATALOG NUMBER	FINISH	MFR
1	EA	CONT. HINGE	112XY	628	IVE
1	EA	CONT. HINGE	112XY EPT	628	IVE
1	EA	POWER TRANSFER	EPT10 CON	689	VON
1	EA	REMOVABLE MULLION	KR4954 STAB	689	VON
1	EA	PANIC HARDWARE	LD-98-EO	626	VON
1	EA	ELEC PANIC HARDWARE	RX-QEL-98-NL-OP-110MD-CON 24 VDC	626	VON
1	EA	RIM CYLINDER	12E72 PEAKS	626	BES
1	EA	MORTISE CYLINDER	1E74 PEAKS	626	BES
1	EA	90 DEG OFFSET PULL	8190EZHD 12" O	630-316	IVE
2	EA	SURFACE CLOSER	4111 EDA	689	LCN
2	EA	KICK PLATE	8400 8" X 2" LDW B-CS	630	IVE
2	EA	WALL STOP/HOLDER	WS45/WS45X	626	IVE
1	EA	MULLION SEAL	8780NBK PSA	BK	ZER
2	EA	SILENCER	SR64	GRY	IVE
2	EA	WIRE HARNESS	CON-P (LENGTH AS REQUIRED)		VON
1	EA	WIRE HARNESS	CON-6W		VON
2	EA	DOOR POSITION SWITCH	195-12W	WHT	GEO
1	EA	CENTRAL POWER SUPPLY	SPECIFIED IN MISC HARDWARE SET		
	EA	CARD CREDENTIAL READER	SPECIFIED IN DIVISION 28		

DOOR OPERATION:
DOOR NORMALLY CLOSED AND LOCKED
ENTRY BY VALID CARD CREDENTIAL OR KEY OVERRIDE
FREE EGRESS FROM INSIDE AT ALL TIMES
DOOR CONTACT MONITORED BY DIVISION 28

HARDWARE SET NO. 07A

For use on Door #(s):

A115	A116	A130	B118	B120	B135
D117	D118	E110	E111		

Provide each SGL door(s) with the following:

QTY		DESCRIPTION	CATALOG NUMBER	FINISH	MFR
3	EA	HINGE	5BB1 4.5 X 4.5	652	IVE
1	EA	PRIVACY LOCK W/ OUTSIDE INDICATOR	ND40S RHO OS-OCC	626	SCH
1	EA	SURFACE CLOSER	4011	689	LCN
1	EA	KICK PLATE	8400 8" X 2" LDW B-CS	630	IVE
1	EA	WALL STOP	WS406/407CCV	630	IVE
1	EA	GASKETING	488SBK PSA	BK	ZER

HARDWARE SET NO. 07B

For use on Door #(s):

A101A	A102A	A103A	A104A	A105A	A109A
A112A	A113A	A114A	B108		

Provide each SGL door(s) with the following:

QTY		DESCRIPTION	CATALOG NUMBER	FINISH	MFR
3	EA	HINGE	5BB1 4.5 X 4.5	652	IVE
1	EA	PRIVACY LOCK W/ OUTSIDE INDICATOR	ND40S RHO OS-OCC	626	SCH
1	EA	WALL STOP	WS406/407CCV	630	IVE
1	EA	GASKETING	488SBK PSA	BK	ZER

HARDWARE SET NO. 09A

For use on Door #(s):

D114	D115

Provide each SGL door(s) with the following:

QTY		DESCRIPTION	CATALOG NUMBER	FINISH	MFR
3	EA	HINGE	5BB1HW 4.5 X 4.5	652	IVE
1	EA	CLASSROOM DEADBOLT	8T37S-STK - PEAKS CORE	626	BES
1	EA	PUSH PLATE	8200 6" X 16" CFT	630	IVE
1	EA	PULL PLATE	8302 10" 4" X 16" CFC	630	IVE
1	EA	SURFACE CLOSER	4111 EDA	689	LCN
1	EA	KICK PLATE	8400 8" X 2" LDW B-CS	630	IVE
1	EA	WALL STOP	WS406/407CCV	630	IVE
3	EA	SILENCER	SR64	GRY	IVE

HARDWARE SET NO. 09B

For use on Door #(s):

C117 C118 E102 E103

Provide each SGL door(s) with the following:

QTY		DESCRIPTION	CATALOG NUMBER	FINISH	MFR
3	EA	HINGE	5BB1HW 4.5 X 4.5	652	IVE
1	EA	CLASSROOM DEADBOLT	8T37S-STK - PEAKS CORE	626	BES
1	EA	PUSH PLATE	8200 6" X 16" CFC	630	IVE
1	EA	PULL PLATE	8302 10" 4" X 16" CFT	630	IVE
1	EA	SURFACE CLOSER	4011	689	LCN
1	EA	KICK PLATE	8400 8" X 2" LDW B-CS	630	IVE
1	EA	WALL STOP	WS406/407CCV	630	IVE
3	EA	SILENCER	SR64	GRY	IVE

NOTE:
EXISTING FRAME TO REMAIN
VERIFY EXISTING DOOR AND FRAME PREPS FOR COMPATIBILITY OF SPECIFIED HARDWARE
PRIOR TO ORDERING NOTIFY ARCHITECT OF ANY REQUIRED CHANGES TO SPECIFIED HARDWARE BASED ON EXISTING CONDITONS

HARDWARE SET NO. MISC-01

For use on Door #(s):

MISC
HARDWARE

Provide each SGL door(s) with the following:

QTY		DESCRIPTION	CATALOG NUMBER	FINISH	MFR
6	EA	POWER SUPPLY	PS906 900-KL 900-4R 900-4R 120/240 VAC		VON
1	EA	KEY CABINET	PER PART II PRODUCTS		LUN
1	EA	PROGRAMMING CABLE	SUS-A BASE BID (FURNISHED UNDER DIV 087100)		

END OF SECTION

SECTION 088000 – GENERAL GLAZING

PART 1 - GENERAL

1.1 RELATED DOCUMENTS

A. Drawings and general provisions of the Contract, including General and Supplementary Conditions and Division 1 Specification Sections, apply to this Section.

1.2 SUMMARY

A. This Section includes the following:

1. Glazing for the following products and applications, including those specified in other Sections where glazing requirements are specified by reference to this Section:

a. Windows.
b. Doors.
c. Interior borrowed lites.
d. Aluminum framed entrances and storefronts.
e. Glazed aluminum curtain walls.
f. Sloped glazing systems and skylights.

2. Applied window films.

B. Related Sections include the following:

1. Division 8 Section “Fire-Rated Glazing” for fire-rated glazing in fire-rated hollow metal doors and frames and in fire-rated flush wood doors.
2. Division 8 Section "Hollow Metal Doors and Frames" for hollow metal doors and frames to receive general glazing.
3. Division 8 Section "Flush Wood Doors" for wood doors to receive general glazing.
4. Division 8 Section "Aluminum Entrances and Storefronts" for aluminum storefront framing systems to receive general glazing.
5. Division 8 Section "Glazed Aluminum Curtain Walls" for curtain wall systems to receive general glazing.
6. Division 8 Section Fire-Rated Frames and Glazing for ASTM E119 compliant fire-rated glass walls.
7. Division 10 Section “Demountable Partitions” for glazing installed integral with demountable partition systems.

1.3 DEFINITIONS

A. Glass Manufacturers: Firms that produce primary glass or fabricated glass as defined in referenced glazing publications.

B. Glazing Fabricators: Firms that produce fabricated glass products from primary glass as defined in referenced glazing publications.

C. Glass Thicknesses: Indicated by thickness designations in millimeters according to ASTM C1036.

D. Interspace: Space between lites of an insulating-glass unit that contains dehydrated air or a specified gas.

E. Deterioration of Coated Glass: Defects developed from normal use that are attributed to the fabricating process and not to causes other than glass breakage and practices for maintaining and cleaning coated glass contrary to fabricator's written instructions. Defects include peeling, cracking, and other indications of deterioration in metallic coating.

F. Deterioration of Laminated Glass: Defects developed from normal use that are attributed to the fabricating process and not to causes other than glass breakage and practices for maintaining and cleaning laminated glass contrary to fabricator's written instructions. Defects include edge separation, delamination materially obstructing vision through glass, and blemishes exceeding those allowed by referenced laminated-glass standard.

G. Deterioration of Insulating Glass: Failure of the hermetic seal under normal use that is attributed to the fabricating process and not to causes other than glass breakage and practices for maintaining and cleaning insulating glass contrary to fabricator's written instructions. Evidence of failure is the obstruction of vision by dust, moisture, or film on interior surfaces of glass.

1.4 PERFORMANCE REQUIREMENTS

A. General: Provide glazing systems capable of withstanding normal thermal movement and wind and impact loads (where applicable) without failure, including loss or glass breakage attributable to the following: Defective manufacturing, fabrication, or installation; failure of sealants or gaskets to remain watertight and airtight; deterioration of glazing materials; other defects in construction.

B. Glass Design: Glass thicknesses indicated are minimums and are for detailing purposes only. Confirm glass thicknesses by analyzing Project design loads and in-service conditions. Provide glass lites for various size openings in nominal thicknesses indicated, but not less than thicknesses and in strengths (annealed or heat treated) required to meet or exceed the following criteria:

1. Glass Thicknesses: Select minimum glass thicknesses to comply with ASTM E1300 and ICC's International Building Code (applicable version) according to the following requirements:

a. Specified Design Wind Loads: Determine design wind loads applicable to Project from basic wind speed indicated in miles per hour at 33 feet above grade, according to ASCE 7, "Minimum Design Loads for Buildings and Other Structures": Section 6.4.2, "Analytic Procedure," based on mean roof heights above grade indicated on Drawings.

1) Wind Design Data: As indicated on (Structural) Drawings.

2) Basic Wind Speed: 90 mph
3) Importance Factor: 1.15
4) Exposure Category: C

b. Specified Design Snow Loads: As indicated on (Structural) Drawings, but not less than snow loads applicable to Project required by ASCE 7, "Minimum Design Loads for Buildings and Other Structures": Section 7, "Snow Loads".

c. Probability of Breakage for Vertical Glazing: 8 lites per 1,000 for lites set vertically or not more than 15 degrees off vertical and under wind action.

1) Load Duration: 60 seconds or less.

d. Probability of Breakage for Sloped Glazing: For glass surfaces sloped more than 15 degrees from vertical, design glass for a probability of breakage not greater than 0.001.

e. Maximum Lateral Deflection: For glass supported on all four edges, limit center-of-glass deflection at design wind pressure to not more than 1/50 times the short-side length or 1-inch, whichever is less.

f. Differential Shading: Design glass to resist thermal stresses induced by differential shading within individual glass lites.

g. Minimum Glass Thickness for Exterior Lites:

1) Manufacturer's standard to meet wind load criteria, but not less than 6 mm.

C. Thermal Movements: Provide glazing that allows for thermal movements resulting from the following maximum change (range) in ambient and surface temperatures acting on glass framing members and glazing components. Base engineering calculation on surface temperatures of materials due to both solar heat gain and nighttime-sky heat loss.

1. Temperature Change: 120 deg F, ambient; 180 deg F, material surfaces.

D. Performance Characteristics: Provide glass with performance properties specified based on manufacturer's published test data as determined according to procedures indicated below:

1. For monolithic glass lites, properties are based on units with lites 6 mm thick.
2. For insulating-glass units, properties are based on units with lites 6 mm thick and a nominal 1/2-inch-wide interspace.
3. Center-of-Glass thermal and optical performance properties shall be based on data and calculations from the current LBNL Windows 7.3 computer program expressed as Btu/sq. ft. x h x deg °F.
4. Fenestration Performance: Performance values that take into account the total fenestration (center-of-glass and framing members) normally identified with building energy codes such as ASHRAE-IESNA 90.1 and the IECC. Values can also be tested and certified by the National Fenestration Rating Council (NFRC).

1.5 COORDINATION

A. Coordinate glazing channel dimensions to provide necessary bite on glass, minimum edge and face clearances, and adequate sealant thicknesses, with reasonable tolerances.

1.6 SUBMITTALS

A. Product Data: For each glass product and glazing material indicated.

B. Samples: Provide 12-inch-square samples of each glass product specified.

C. Glazing Schedule: Use same designations indicated on Drawings and specified herein for glazed openings in preparing a schedule listing glass types and thicknesses for each size opening and location.

D. Product Certificates: Signed by manufacturers of glass and glazing products certifying that products furnished comply with requirements.

1. For solar-control low-e-coated glass, provide documentation demonstrating that manufacturer of coated glass is certified by coating manufacturer.

E. Qualification Data: For firms and persons specified in "Quality Assurance" Article to demonstrate their capabilities and experience. Include lists of completed projects with project names and addresses, names and addresses of Architects and Owners, and other information specified.

F. Adhesion and Compatibility Test Report: From glazing sealant manufacturer indicating glazing sealants have been tested for adhesion to glass and glazing channel substrates and for compatibility with glass and other glazing materials.

G. Product Test Reports: From a qualified testing agency, indicating the specified products comply with requirements based on comprehensive testing of standard products. Provide product test reports for each glass product.

I. Warranties: Special warranties specified in this Section.

1.7 QUALITY ASSURANCE

A. Installer Qualifications: An experienced installer who has completed glazing similar in material, design, and extent to that indicated for Project and whose work has resulted in construction with a record of successful in-service performance.

B. Source Limitations for Monolithic Float Glass: Obtain all monolithic float glass from one source from a single manufacturer.

C. Source Limitations for Insulating Glass: Obtain all insulating-glass units from one source from a single fabricator using the same type of glass and other components for each type of unit specified.

D. Source Limitations for Laminated Glass: Obtain all laminated glass units from one source from a single fabricator using the same type of glass and other components for each type of unit indicated.

E. Source Limitations for Glazing Accessories: Obtain all glazing accessories from one source from a single manufacturer for each product and installation method indicated.

F. Safety Glass: Category II materials complying with testing requirements in 16 CFR 1201 and ANSI Z97.1.

1. Subject to compliance with requirements, permanently mark safety glass with certification label of Safety Glazing Certification Council or another certification agency acceptable to authorities having jurisdiction.

G. Glazing Publications: Comply with published recommendations of glass product manufacturers and organizations below, unless more stringent requirements are indicated. Refer to the following publications for glazing terms not otherwise defined in this Section or in referenced standards.

1. NGA Publications: NGA “Glazing Manual", “Sealant Manual” and “Laminated Glass Design Guide.”
2. SIGMA Publications: SIGMA TM-3000, “Vertical Glazing Guidelines.”
3. SIGMA Publication for Insulating Glass: SIGNA TM-3000, “North American Glazing Guidelines for Sealed Insulating Glass Units for Commercial and Residential Use.”

H. Preinstallation Conference: Conduct conference at Project site in accordance with Division 1 Section “Project Meetings”.

1. Review and finalize construction schedule and verify availability of materials, Installer's personnel, equipment, and facilities needed to make progress and avoid delays.
2. Review temporary protection requirements for glazing during and after installation.

I. Insulating-Glass Certification Program: Permanently marked either on spacers or on at least one component lite of units with appropriate certification label of the following inspecting and testing agency:

1. Insulated Glass Certification Council (IGCC)

1.8 DELIVERY, STORAGE, AND HANDLING

A. Protect glazing materials according to manufacturer's written instructions and as needed to prevent damage to glass and glazing materials from condensation, temperature changes, direct exposure to sun, or other causes.

B. For insulating-glass units that will be exposed to substantial altitude changes, comply with insulating-glass manufacturer's written recommendations for venting and sealing to avoid hermetic seal ruptures.

1.9 PROJECT CONDITIONS

A. Environmental Limitations: Do not proceed with glazing when ambient and substrate temperature conditions are outside limits permitted by glazing material manufacturers and when glazing channel substrates are wet from rain, frost, condensation, or other causes.

1.10 WARRANTY

A. General Warranty: Special warranties specified in this Article shall not deprive Owner of other rights Owner may have under other provisions of Contract Documents and shall be in addition to, and run concurrent with, other warranties made by Contractor under requirements of Contract Documents.

B. Manufacturer's Special Warranty on Insulating Glass: Written warranty, made out to Owner and signed by insulating-glass fabricator agreeing to furnish replacements for insulating-glass units that deteriorate as defined in “Definitions” Article within specified warranty period indicated below.

1. Warranty Period: 10 years from date of Substantial Completion.

C. Manufacturer's Special Warranty on Laminated Glass: Written warranty, made out to Owner and signed by laminated-glass fabricator agreeing to furnish replacements for laminated-glass units that deteriorate as defined in “Definitions” Article within specified warranty period indicated below

1. Warranty Period: 5 years from date of Substantial Completion.

D. Manufacturer's Special Warranty for Coated-Glass Products: Written warranty, made out to Owner and signed by coated-glass fabricator agreeing to furnish replacements for coated-glass that deteriorates as defined in “Definitions” Article within specified warranty period indicated below. Deterioration of coated glass is defined as defects developed from normal use that are not attributed to glass breakage or to maintaining and cleaning coated glass contrary to manufacturer’s written instructions. Defects include peeling, cracking, and other indications of deterioration in coating.

1. Warranty Period: 5 years from date of Substantial Completion.

PART 2 - PRODUCTS

2.1 GLASS PRODUCTS, GENERAL

A. Thickness: Where glass thickness is indicated, it is a minimum. Provide glass lites in thicknesses as needed to comply with requirements indicated.

1. Minimum Glass Thickness for Exterior Lites: Not less than 6 mm.

B. Strength: Where float glass is indicated, provide annealed float glass, Kind HS heat-treated float glass, or Kind FT heat-treated float glass as required by applicable glazing code.

2.2 MANUFACTURERS AND FABRICATION

A. Available Products: Subject to compliance with requirements, manufacturers offering products that may be incorporated into the Work include, but are not limited to, the following:

1. Monolithic Float Glass

   a. Vitro Architectural Glass.
   b. Guardian Glass, Inc.
   c. Pilkington, Inc.
   d. AGC.

B. Available Fabricators: Subject to compliance with requirements, fabricators of the products specified include, but are not limited to, the following:

1. Glass Enterprises, Inc.
2. Viracon, Inc.
3. Oldcastle Glass
4. Trulite.

2.3 MONOLITHIC FLOAT GLASS

A. Float Glass: ASTM C1036, Type 1, Class 1 (clear), Class 2 (tinted) transparent glass, flat, Quality q3 (glazing select); class, kind and condition indicated.

1. Provide Kind FT (fully tempered), Category 2, where safety glass is required by the applicable glazing codes.

B. Fabrication Process: By horizontal (roller-hearth) process with roll-wave distortion parallel to bottom edge of glass as installed, unless otherwise indicated.

1. Flatness Tolerances

   a. Roller-Wave or Ripple: Deviation from flatness at any peak shall be targeted not to exceed 0.003-inch as measured per peak to valley for 1/4-inch (6 mm) thick glass.
   b. Bow and Warp: The bow and warp tolerances targeted shall not exceed 1/32-inch per linear foot.

2.4 INSULATING GLASS

A. Insulating Glass Units – General: Preassembled units consisting of sealed lites of glass separated by a dehydrated interspace and complying with ASTM E2190 for Class CBA units and with requirements specified in this Article.

1. **Type IG-1** Insulated Glass: Insulated glass units consisting of two lites of clear, annealed glass separated by a 1/2-inch sealed air space. Provide insulated units with low “E” coating. Unless otherwise noted, for use in the building’s perimeter openings **primarily facing North and East**. Refer to Schedules and Frame Elevations for applied use.

a. Basis-of-Design Product: Subject to compliance with requirements, provide units fabricated with "Vitro Glass Solarban 60 Clear" or comparable product with the following characteristics:

1) Ultra Violet: 18%.
2) Visible Light Transmittance: 70%.
3) Total Solar Energy Transmittance: 34%.
4) Winter Night-time U Value: .29.
5) Summer Day-time U Value: .27.
6) Shading Coefficient: .45.
7) Solar Heat Gain Coefficient: .39.
8) Light to Solar Gain: 1.79.

b. Insulating Glass Unit Make-up

1) Outboard Lite: "Vitro Glass Solarban 60 Clear", 1/4 inch-thick.
2) Low "E" coating on 2nd. surface.
3) 1/2-inch-thick desiccant filled structural silicone spacer; Quanex Super Spacer TriSeal, GE3, black.
4) Inboard Lite: 1/4 inch-thick clear glass.
5) Overall Thickness: 1-inch.

2. **Type IG-2** Insulated Glass: Insulated glass units consisting of two lites of clear, annealed glass separated by a 1/2-inch sealed air space. Provide insulated units with low "E" coating. Unless otherwise noted, for use in the building's perimeter openings **primarily facing South and West**. Refer to Schedules and Frame Elevations for applied use.

a. Basis-of-Design Product: Subject to compliance with requirements, provide units fabricated with "Vitro Glass Solarban 70 Clear" or comparable product with the following characteristics:

1) Ultra Violet: 6%.
2) Visible Light Transmittance: 64%.
3) Total Solar Energy Transmittance: 24%.
4) Winter Night-time U Value: .28.
5) Summer Day-time U Value: .26.
6) Shading Coefficient: .31.
7) Solar Heat Gain Coefficient: .27.
8) Light to Solar Gain: 2.37.

b. Insulating Glass Unit Make-up

1) Outboard Lite: "Vitro Glass Solarban 70 Clear", 1/4 inch-thick.
2) Low "E" coating on 2nd surface.
3) 1/2-inch-thick desiccant filled structural silicone spacer; Quanex Super Spacer TriSeal, GE3, black.
4) Inboard Lite: 1/4-inch-thick clear glass.
5) Overall Thickness: 1-inch.

3. **Type IG-5** Insulated Silicone-Coated Spandrel Glass: Insulated glass units consisting of two lites of clear, annealed glass, separated by a 1/2-inch sealed air space. Provide insulated units with low "E" coating. Unless otherwise noted, for use in the building's perimeter openings **where noted on Drawings, primarily facing North and East**. Refer to Schedules for applied use.

   a. Basis-of-Design Product: Subject to compliance with requirements, provide "Vitro Glass Solarban 60 Clear" or comparable product and "ICD High Performance Coatings, Opaci-Coat 300" with the following characteristics.

      1) Ultra Violet: 0%.
      2) Visible Light Transmittance: 4%.
      3) Total Solar Energy Transmittance: 2%.
      4) Winter Night-time U-Value: .29.
      5) Summer Day-time U-Value: .27.
      6) Shading Coefficient: .35.
      7) Solar Heat Gain Coefficient: .30.
      8) Light to Solar Gain: .13.

   b. Insulating Glass Unit Make-up

      1) Outboard Lite: "Vitro Glass Solarban 60 Clear", 1/4-inch-thick.
      2) Low "E" coating on 2nd surface.
      3) 1/2-inch-thick desiccant filled structural silicone spacer; Quanex Super Spacer TriSeal, GE3, black.
      4) Inboard Lite: 1/4-inch-thick clear glass.
      5) Spandrel Coating: On 4th surface (**BLACK-** Color to be determined by Architect).
      6) Overall Thickness: 1-inch

4. Type IG-6 Insulated Silicone-Coated Spandrel Glass: Insulated glass units consisting of two lites of clear, annealed glass, separated by a 1/2-inch sealed air space. Provide insulated units with low "E" coating. Unless otherwise noted, for use in the building's perimeter openings **where noted on Drawings, primarily facing South and West**. Refer to Schedules for applied use.

   a. Basis-of-Design Product: Subject to compliance with requirements, provide "Vitro Glass Solarban 70 Clear" or comparable product and "ICD High Performance Coatings, Opaci-Coat 300" with the following characteristics.

      1) Ultra Violet: 0%.
      2) Visible Light Transmittance: 4%.
      3) Total Solar Energy Transmittance: 1%.
      4) Winter Night-time U-Value: .28.
      5) Summer Day-time U-Value: .26.
      6) Shading Coefficient: .24.
      7) Solar Heat Gain Coefficient: .21.
      8) Light to Solar Gain: .19.

b. Insulating Glass Unit Make-up

1) Outboard Lite: “Vitro Glass Solarban 70 Clear”, 1/4-inch-thick.
2) Low “E” coating on 2nd surface.
3) 1/2-inch-thick desiccant filled structural silicone spacer; Quanex Super Spacer TriSeal, GE3, black.
4) Inboard Lite: 1/4-inch-thick clear glass.
5) Spandrel Coating: On 4th surface (**BLACK-** Color to be determined by Architect).
6) Overall Thickness: 1-inch

5. Provide Kind FT (fully tempered) where safety glass is required by the applicable glazing codes.
6. Locations: Insulating glass shall be used in all exterior windows, curtainwalls, storefronts/entrances, windows/vents and doors. At a minimum, insulating glass units in doors and sidelites (below the door head-height) and other locations indicated on Drawings or required by applicable code, shall consist of tempered glass.

B. Sealing System: Dual seal, with primary and secondary sealants as follows:

1. Dual air seal of polyisobutylene (PIB), and secondary seal of silicone.

2.5 LAMINATED GLASS

A. Laminated Glass – General: ASTM C1172 and complying with testing requirements in 16 CFR 1201 for Category II materials, and with other requirements specified. Use materials that have a proven record of no tendency to bubble, discolor, or lose physical and mechanical properties after fabrication and installation.

1. Construction: Laminate glass with interlayers to comply with interlayer manufacturer's written recommendations.
2. Interlayer Thickness: Provide thickness not less than that indicated, and as needed to comply with requirements; one or multiple layers, formulated to absorb the majority of all naturally-occurring ultraviolet (UV) radiation from sunlight and provide long-term stability with built-in UV filtering.
3. Basis-of-Design Products: Subject to compliance with requirements, provide the following interlayer products, or comparable interlayer products by other manufacturers that meet the specified standard of quality:

a. Polyvinyl butyral (PVB): Kuraray “Butacite.”
b. Acoustic: Kuraray “Acoustic.”
c. High-Security: Kuraray “SentryGlas.”

4. **Type ILG-1** Insulated Laminated Safety Glass: Insulated glass units consisting of one lite of 1/4-inch-thick clear tempered glass and one lite of 7/16-inch-thick laminated tempered glass (two 3/16 inch-thick lites of clear, tempered safety glass laminated with a high-security, .060 interlayer equal to Kuraray “SentryGlas”), separated by a 3/8 inch-thick sealed air space. Provide insulated units with low “E” coating. Primarily for use at the

building's primary entrance points **where noted on Drawings primarily facing North and East**. Refer to Schedules for applied use.

a. Basis-of-Design Product: Subject to compliance with requirements, provide units fabricated with "Vitro Glass Solarban 60 Clear" or comparable product, with the following characteristics:

1) Ultra Violet: 18%.
2) Visible Light Transmittance: 70%.
3) Total Solar Energy Transmittance: 34%.
4) Winter Night-time U Value: .29.
5) Summer Day-time U Value: .27.
6) Shading Coefficient: .45.
7) Solar Heat Gain Coefficient: .39.
8) Light to Solar Gain: 1.79.

b. Insulating Glass Unit Make-up:

1) Outboard Lite: "Vitro Glass Solarban 60 Clear," 1/4-inch-thick.
2) Low "E" coating on 2nd surface.
3) 3/8-inch-thick desiccant filled structural silicone spacer; Quanex Super Spacer TriSeal, GE3, black.
4) Inboard Lite: 7/16-inch-thick clear laminated glass as follows:

a) First Ply: Clear tempered glass, 3/16-inch-thick.
b) Interlayer: High-Security, 0.060-inch-thick; clear.
c) Second Ply: Clear tempered glass, 3/16-inch-thick.
d) Overall Inboard Lite Thickness: 7/16-inch.

5) Overall Thickness: 1-1/16-inch.

5. **Type ILG-2** Insulated Laminated Safety Glass: Insulated glass units consisting of one lite of 1/4-inch-thick clear tempered glass and one lite of 7/16-inch-thick laminated tempered glass (two 3/16-inch-thick lites of clear, tempered safety glass laminated with a high-security, .060 interlayer equal to Kuraray "SentryGlas"), separated by a 3/8-inch thick sealed air space. Provide insulated units with low "E" coating. Primarily for use at the building's primary entrance points **where noted on Drawings primarily facing South and West**. Refer to Schedules for applied use.

a. Basis-of-Design Product: Subject to compliance with requirements, provide units fabricated with "Vitro Glass Solarban 70 Clear" or comparable product, with the following characteristics:

1) Ultra Violet: 6%.
2) Visible Light Transmittance: 64%.
3) Total Solar Energy Transmittance: 24%.
4) Winter Night-time U Value: .28.
5) Summer Day-time U Value: .26.
6) Shading Coefficient: .31.

7) Solar Heat Gain Coefficient: .27.
8) Light to Solar Gain: 2.37.

b. Insulating Glass Unit Make-up:

1) Outboard Lite: "Vitro Glass Solarban 70 Clear," 1/4-inch-thick.
2) Low "E" coating on 2nd surface.
3) 3/8-inch-thick desiccant filled structural silicone spacer; Quanex Super Spacer TriSeal, GE3, black.
4) Inboard Lite: 7/16-inch-thick clear laminated glass, as follows:

a) First Ply: Clear tempered glass, 3/16-inch-thick.
b) Interlayer: High-Security, 0.060 inch-thick; clear.
c) Second Ply: Clear tempered glass, 3/16-inch-thick.
d) Overall Inboard Lite Thickness: 7/16-inch.

5) Overall Thickness: 1-1/16 inch.

6. **Type LG-1** Monolithic Two-Ply Laminated Safety Glass: Glass units consisting of two lites of 1/4-inch-thick clear tempered glass laminated with a .060 clear interlayer equal to Kuraray "SentryGlas". For use in the building's interior openings where noted on Drawings.

a. Overall Thickness: 9/16-inch

2.6 GLAZING GASKETS

A. Dense Compression Gaskets: Molded or extruded gaskets of material indicated below, complying with standards referenced with name of elastomer indicated below, and of profile and hardness required to maintain watertight seal:

1. Neoprene, ASTM C864.
2. EPDM, ASTM C864.
3. Silicone, ASTM C1115.
4. Thermoplastic polyolefin rubber, ASTM C1115.

2.7 GLAZING TAPES

A. Back-Bedding Mastic Glazing Tape: Preformed, butyl-based elastomeric tape with a solids content of 100 percent; non-staining and non-migrating in contact with nonporous surfaces; with or without spacer rods as recommended in writing by tape and glass manufacturers for application indicated; packaged on rolls with a release paper backing; and complying with ASTM C1281 and AAMA 800.

2.8 MISCELLANEOUS GLAZING MATERIALS

A. General: Provide products of material, size, and shape complying with referenced glazing standard, requirements of manufacturers of glass and other glazing materials for application indicated, and with a proven record of compatibility with surfaces contacted in installation.

B. VOC Content: For Sealants used inside weatherproofing system, not more than 250 g/L when calculated according to 40 CFR 59, subpart D.

C. Cleaners, Primers, and Sealers: Types recommended by sealant or gasket manufacturer.

D. Setting Blocks: Elastomeric material with a Shore A durometer hardness of 85, plus or minus 5.

E. Spacers: Elastomeric blocks or continuous extrusions with a Shore A durometer hardness required by glass manufacturer to maintain glass lites in place for installation indicated.

F. Edge Blocks: Elastomeric material of hardness needed to limit glass lateral movement (side walking).

2.9 FABRICATION OF GLASS AND OTHER GLAZING PRODUCTS

A. Fabricate glass and other glazing products in sizes required to glaze openings indicated for Project, with edge and face clearances, edge and surface conditions, and bite complying with written instructions of product manufacturer and referenced glazing standard, to comply with system performance requirements.

B. Clean-cut or flat-grind vertical edges of butt-glazed monolithic lites in a manner that produces square edges with slight kerfs at junctions with outdoor and indoor faces.

C. Grind smooth and polish exposed glass edges and corners.

PART 3 - EXECUTION

3.1 EXAMINATION

A. Examine framing glazing, with Installer present, for compliance with the following:

1. Manufacturing and installation tolerances, including those for size, squareness, and offsets at corners.
2. Presence and functioning of weep system.
3. Minimum required face or edge clearances.
4. Effective sealing between joints of glass-framing members.

B. Proceed with installation only after unsatisfactory conditions have been corrected.

3.2 PREPARATION

A. Clean glazing channels and other framing members receiving glass immediately before glazing. Remove coatings not firmly bonded to substrates.

3.3 GLAZING, GENERAL

A. Comply with combined written instructions of manufacturers of glass, sealants, gaskets, and other glazing materials, unless more stringent requirements are indicated, including those in referenced glazing publications.

B. Glazing channel dimensions, as indicated on Drawings, provide necessary bite on glass, minimum edge and face clearances, with reasonable tolerances. Adjust as required by Project conditions during installation.

C. Protect glass edges from damage during handling and installation. Remove damaged glass from Project site and legally dispose of off Project site. Damaged glass is glass with edge damage or other imperfections that, when installed, could weaken glass and impair performance and appearance.

D. Install setting blocks in sill rabbets, sized and located to comply with referenced glazing publications, unless otherwise required by glass manufacturer. Set blocks in thin course of compatible sealant suitable for heel bead.

E. Do not exceed edge pressures stipulated by glass manufacturers for installing glass lites.

F. Provide spacers for glass lites where the length plus width is larger than 50-inches as follows:

1. Locate spacers directly opposite each other on both inside and outside faces of glass. Install correct size and spacing to preserve required face clearances, unless gaskets are used that have demonstrated ability to maintain required face clearances and to comply with system performance requirements.
2. Provide 1/8-inch minimum bite of spacers on glass.

G. Provide edge blocking where indicated or needed to prevent glass lites from moving sideways in glazing channel, as recommended in writing by glass manufacturer and according to requirements in referenced glazing publications.

H. Set glass lites in each series with uniform pattern, draw, bow, and similar characteristics.

3.4 GASKET GLAZING (DRY)

A. Fabricate compression gaskets in lengths recommended by gasket manufacturer to fit openings exactly, with stretch allowance during installation.

B. Insert soft compression gasket between glass and frame or fixed stop so it is securely in place with joints miter cut and bonded together at corners.

C. Center glass lites in openings on setting blocks and press firmly against soft compression gasket by inserting dense compression gaskets formed and installed to lock in place against faces of removable stops. Start gasket applications at corners and work toward centers of openings. Compress gaskets to produce a weathertight seal without developing bending stresses in glass. Seal gasket joints with sealant recommended by gasket manufacturer.

D. Install gaskets so they protrude past face of glazing stops.

3.5 CLEANING AND PROTECTION

A. Protect exterior glass from damage immediately after installation by attaching crossed streamers to framing held away from glass. Do not apply markers to glass surface. Remove nonpermanent labels, and clean surfaces.

B. Protect glass from contact with contaminating substances resulting from construction operations, including weld splatter. If, despite such protection, contaminating substances do come into contact with glass, remove them immediately as recommended by glass manufacturer.

C. Examine glass surfaces adjacent to or below exterior concrete and other masonry surfaces at frequent intervals during construction, but not less than once a month, for build-up of dirt, scum, alkaline deposits, or stains; remove as recommended by glass manufacturer.

D. Remove and replace glass that is broken, chipped, cracked, abraded, or damaged in any way, including natural causes, accidents, and vandalism, during construction period.

E. Wash glass on both exposed surfaces in each area of Project not more than four days before date scheduled for inspections that establish date of Substantial Completion. Wash glass as recommended by glass manufacturer.

END OF SECTION 088000

SECTION 092216 - NON-STRUCTURAL METAL FRAMING

PART 1 - GENERAL

1.1 RELATED DOCUMENTS

A. Drawings and general provisions of the Contract, including General and Supplementary Conditions and Division 01 Specification Sections, apply to this Section.

1.2 SUMMARY

A. Section Includes:

1. Non-load-bearing steel framing systems for interior partitions.
2. Suspension systems for interior ceilings and soffits.
3. Grid suspension systems for gypsum board ceilings.

B. Related Requirements:

1. Division 5 Section "Cold-Formed Metal Framing" for exterior and interior load-bearing and exterior non-load-bearing wall studs; floor joists; roof rafters and ceiling joists; and roof trusses.
2. Division 6 Section “Sheathing” for exterior wall, ceiling and soffit gypsum-based sheathing to be applied to metal framing systems.
3. Division 9 Section “Gypsum Board” for interior and exterior gypsum board to be applied to metal framing systems.

1.3 ACTION SUBMITTALS

A. Product Data: For each type of product.

1. Studs and Runners: Provide documentation that framing members' certification is according to SIFA's "Code Compliance Certification Program for Cold-Formed Steel Structural and Non-Structural Framing Members."

B. Shop Drawings: For substantial suspended bulkhead assemblies. Include layout, spacings, sizes, thicknesses, and types of light-gauge metal framing; fabrication; and fastening and anchorage details, including threaded rods and mechanical fasteners.

1. Indicate reinforcing channels, opening framing, supplemental framing, strapping, bracing, bridging, splices, accessories, connection details, and attachment to adjoining work.

C. Delegated-Design Submittal: For light-gauge metal framing assemblies required for substantial suspended bulkhead assemblies.

1. Architect reserves the right to revise quantities and locations of various suspension components if aesthetic requirements are not met per the proposed structural layout.

1.4 INFORMATIONAL SUBMITTALS

A. Evaluation Reports: For embossed steel studs and runners and firestop tracks, from ICC-ES or other qualified testing agency acceptable to authorities having jurisdiction.

1.5 DELIVERY, STORAGE, AND HANDLING

A. Notify manufacturer of damaged materials received prior to installation.

B. Deliver materials in manufacturer's original, unopened, undamaged containers with identification labels intact.

C. Protect cold-formed metal framing from corrosion, deformation, and other damage during delivery, storage, and handling as required by AISI's "Code of Standard Practice."

PART 2 - PRODUCTS

2.1 PERFORMANCE REQUIREMENTS

A. Fire-Test-Response Characteristics: For fire-resistance-rated assemblies that incorporate non-load-bearing steel framing, provide materials and construction identical to those tested in assembly indicated, according to ASTM E 119 by an independent testing agency.

B. STC-Rated Assemblies: For STC-rated assemblies, provide materials and construction identical to those tested in assembly indicated, according to ASTM E 90 and classified according to ASTM E 413 by an independent testing agency.

C. Design framing systems in accordance with American Iron and Steel Institute Publication “North American Specification for the Design of Cold-Formed Steel Framing – Nonstructural Members”, except as otherwise shown or specified.

D. Horizontal Deflection: For wall assemblies, limited to 1/240 of the wall height based on horizontal loading of 5 lbf/sq. ft. minimum, as required by applicable building code.

2.2 FRAMING SYSTEMS

A. Framing Members, General: Comply with ASTM C 754 for conditions indicated.

1. Steel Sheet Components: Comply with ASTM C 645 requirements for metal unless otherwise indicated.
2. Protective Coating: Coating with equivalent corrosion resistance of ASTM A 653, G40, hot-dip galvanized unless otherwise indicated.

B. Studs and Runners: ASTM C 645; use either steel studs and runners or dimpled steel studs and runners.

1. Steel Studs and Runners:

a. Minimum Base-Metal Thickness: 26 gauge, minimum.
b. Depth: As indicated on Drawings.

2. Dimpled Steel Studs and Runners:

a. Minimum Base-Metal Thickness: 28 gauge, minimum.
b. Depth: As indicated on Drawings.

C. Slip-Type Head Joints: Where indicated, provide one of the following:

1. Single Long-Leg Runner System: ASTM C 645 top runner with 2-inch-deep flanges in thickness not less than indicated for studs, installed with studs friction fit into top runner and with continuous bridging located within 12 inches of the top of studs to provide lateral bracing.
2. Deflection Track: Steel sheet top runner manufactured to prevent cracking of finishes applied to interior partition framing resulting from deflection of structure above; in thickness not less than indicated for studs and in width to accommodate depth of studs.

a. Available Manufacturers: Subject to compliance with requirements, manufacturers offering deflection tracks that may be incorporated into the Work include, but are not limited to, the following:

1) Clark Dietrich Building Systems.
2) Marino\WARE.
3) FireTrak Corp.
4) MBA Building Supplies.
5) Metal-Lite.
6) Steel Network, Inc. (The).
7) Telling Industries.

D. Firestop Tracks: Provide one of the following options for isolating partition framing from structure above in specific fire-resistance-rated assemblies:

1. OPTION 1 - Standard Firestop Tracks: Top runner manufactured to allow partition heads to expand and contract with movement of the structure while maintaining continuity of fire-resistance-rated assembly indicated; in thickness not less than indicated for studs and in width to accommodate depth of studs. Provide in conjunction with field-applied fire caulking and damming products to comply with prescribed fire-resistant assemblies as indicated.

a. Available Manufacturers: Subject to compliance with requirements, manufacturers offering firestop tracks that may be incorporated into the Work include, but are not limited to, the following:

1) Clark Dietrich Building Systems.
2) Marino\WARE.
3) FireTrak Corp.
4) Grace Construction Products; W.R. Grace & Co.
5) Metal-Lite.
6) Steel Network, Inc. (The).

2. OPTION 2 - Firestop Tracks with Intumescent Seals: Top runner, with slotted or solid legs, manufactured with factory-installed, minimum 2-mm-thick cured intumescent seal, affixed to steel profiles on one or both sides to provide full and continuous head-of-wall joint protection. Top runner shall be manufactured to allow partition heads to expand and contract with up to three inches of dynamic and static movement (1-1/2 overall movement) while maintaining continuity of fire-resistance-rated assembly indicated, of up to three-hour fire rating; UL-listed.

a. Available Products: Subject to compliance with requirements, manufacturers offering firestop tracks with intumescent seals that may be incorporated into the Work include, but are not limited to, the following:

1) Clark Dietrich Building Systems “BlazeFrame.”
2) Marino\WARE “FAS Track 1000.”

E. Curved Tracks: Manufacturer’s standard continuous lengths of segmented floor and head-of-wall tracks designed to form to radii indicated for non-load-bearing walls, ceilings and bulkheads, permanently secured into place by attaching segments to supports and to one another via pre-punched holes in flanges and webs. Tracks shall match gauge, depth and finish of adjoining framing members.

1. Provide manufacturer’s standard flexible, segmented angles and similar supplemental accessories necessary to form configurations as indicated.
2. Available Products: Subject to compliance with requirements, manufacturers offering non-load-bearing curved wall, ceiling and bulkhead tracks that may be incorporated into the Work include, but are not limited to, the following:

a. Clark Dietrich Building Systems “Contour Track.”
b. Radius Track Corporation “Ready Track.”
c. Duraframe Solutions “Curv-Trak.”
d. Flex-Ability Concepts “Flex-C Trac.”
e. SCAFCO Corp. “Perfect Curve.”

F. Flat Strap and Backing Plate: Steel sheet for blocking and bracing in length and width indicated.

1. Minimum Base-Metal Thickness: 26 gauge, minimum.

G. Cold-Rolled Channel Bridging: Steel, 17 gauge minimum base-metal thickness, with minimum 1/2-inch-wide flanges.

1. Depth: As indicated on Drawings.
2. Clip Angle: Not less than 1-1/2 by 1-1/2 inches, 15-gauge-thick, galvanized steel.

H. Hat-Shaped, Rigid Furring Channels: ASTM C 645.

1. Minimum Base-Metal Thickness: 26 gauge, minimum.
2. Depth: As indicated on Drawings.

I. Z-Shaped Furring: With slotted or non-slotted web, face flange of 1-1/4 inches, wall attachment flange of 7/8 inch, minimum uncoated-metal thickness of 26 gauge, and depth required to fit insulation thickness or depth indicated.

2.3 SUSPENSION SYSTEMS

A. Tie Wire: ASTM A 641, Class 1 zinc coating, soft temper, 0.062-inch-diameter wire, or double strand of 0.048-inch-diameter wire.

B. Wire Hangers: ASTM A 641, Class 1 zinc coating, soft temper, 0.16 inch in diameter.

C. Carrying Channels: Cold-rolled, commercial-steel sheet with a base-metal thickness of 17 gauge and minimum 1/2-inch-wide flanges.

1. Depth: 2-1/2 inches minimum, or as indicated on Drawings.

D. Threaded Rods: For suspended gypsum board assemblies, where indicated; ASTM A 307, Grade A; roll-threaded to ASME, B1.1 UNC and UNF, and UNS Class 1A; low-carbon, zinc-plated coating, Fe/Zn 3AT per ASTM F 1941; threaded rod assemblies shall be field-painted, unless otherwise indicated.

1. Lengths, diameters and spacing as required for each suspended gypsum board assembly; provide minimum quantities of threaded rod assemblies as necessary, and in the most inconspicuous manner as possible.

E. Furring Channels (Furring Members):

1. Cold-Rolled Channels: 17 gauge uncoated-steel thickness, with minimum 1/2-inch-wide flanges, 3/4 inch deep.
2. Steel Studs and Runners: ASTM C 645.

   a. Minimum Base-Metal Thickness: 26 gauge, minimum.
   b. Depth: 2-1/2 inches minimum, or as indicated on Drawings.

3. Dimpled Steel Studs and Runners: ASTM C 645.

   a. Minimum Base-Metal Thickness: 28 gauge, minimum.
   b. Depth: 2-1/2 inches minimum, or as indicated on Drawings.

4. Hat-Shaped, Rigid Furring Channels: ASTM C 645, 7/8 inch deep.

   a. Minimum Base-Metal Thickness: 26 gauge, minimum.

F. Grid Suspension System for Gypsum Board Ceilings (suggested framing system for custom, site-fabricated acoustical ceiling clouds/panels): ASTM C 645, direct-hung system composed of main beams and cross-furring members that interlock. Include angle clips and other accessories to achieve required configuration, including curves.

1. Available Manufacturers: Subject to compliance with requirements, manufacturers offering grid suspension systems for gypsum board ceilings that may be incorporated into the Work include, but are not limited to, the following:

a. Drywall Grid System; Armstrong World Industries, Inc.
b. Chicago Metallic Corporation.
c. USG Corporation.

2.4 AUXILIARY MATERIALS

A. General: Provide auxiliary materials that comply with referenced installation standards.

1. Fasteners for Metal Framing: Of type, material, size, corrosion resistance, holding power, and other properties required to fasten steel members to substrates.

PART 3 - EXECUTION

3.1 EXAMINATION

A. Examine areas and substrates, with Installer present, and including welded hollow-metal frames, cast-in anchors, and structural framing, for compliance with requirements and other conditions affecting performance of the Work.

B. Proceed with installation only after unsatisfactory conditions have been corrected.

3.2 PREPARATION

A. Suspended Assemblies: Coordinate installation of suspension systems with installation of overhead structure to ensure that inserts and other provisions for anchorages to building structure have been installed to receive hangers at spacing required to support the Work and that hangers will develop their full strength.

1. Furnish concrete inserts and other devices indicated to other trades for installation in advance of time needed for coordination and construction.

3.3 INSTALLATION, GENERAL

A. Installation Standard: ASTM C 754.

1. Gypsum Board Assemblies: Also comply with requirements in ASTM C 840 that apply to framing installation.

B. Install supplementary framing, and blocking to support fixtures, equipment services, heavy trim, grab bars, toilet accessories, furnishings, or similar construction.

C. Install bracing at terminations in assemblies.

D. Do not bridge building control and expansion joints with non-load-bearing steel framing members. Frame both sides of joints independently.

3.4 INSTALLING FRAMED ASSEMBLIES

A. Install framing system components according to spacings indicated, but not greater than spacings required by referenced installation standards for assembly types.

1. Single-Layer Application: 16 inches o.c., unless otherwise indicated.
2. Multilayer Application: 16 inches o.c., unless otherwise indicated.
3. Tile Backing Panels: 16 inches o.c., unless otherwise indicated.

B. Where studs are installed directly against exterior masonry walls or dissimilar metals at exterior walls, install isolation strip between studs and exterior wall.

C. Install studs so flanges within framing system point in same direction.

D. Install tracks (runners) at floors and overhead supports. Extend framing full height to structural supports or substrates above suspended ceilings except where partitions are indicated to terminate at suspended ceilings. Continue framing around ducts penetrating partitions above ceiling.

1. Slip-Type Head Joints: Where framing extends to overhead structural supports, install to produce joints at tops of framing systems that prevent axial loading of finished assemblies.
2. Door Openings: Screw vertical studs at jambs to jamb anchor clips on door frames; install runner track section (for cripple studs) at head and secure to jamb studs.

    a. Install two studs at each jamb, unless otherwise indicated.
    b. Install cripple studs at head adjacent to each jamb stud, with a minimum 1/2-inch clearance from jamb stud to allow for installation of control joint in finished assembly.
    c. Extend jamb studs through suspended ceilings and attach to underside of overhead structure.

3. Other Framed Openings: Frame openings other than door openings the same as required for door openings unless otherwise indicated. Install framing below sills of openings to match framing required above door heads.

4. Fire-Resistance-Rated Partitions: Install framing to comply with fire-resistance-rated assembly indicated and support closures and to make partitions continuous from floor to underside of solid structure.

    a. Firestop Track: Where indicated, install to maintain continuity of fire-resistance-rated assembly indicated.

5. Sound-Rated Partitions: Install framing to comply with sound-rated assembly indicated.
6. Curved Partitions:

    a. Bend track to uniform curve and locate straight lengths so they are tangent to arcs.
    b. Begin and end each arc with a stud, and space intermediate studs equally along arcs. On straight lengths of no fewer than two studs at ends of arcs, place studs 6 inches o.c.

E. Direct Furring: Attach to concrete or masonry with stub nails, screws designed for masonry attachment, or powder-driven fasteners spaced 24 inches o.c.

F. Z-Furring Members:

1. Erect insulation at orientation and spacing as indicated, and hold in place with Z-furring members.
2. Except at exterior corners, securely attach narrow flanges of furring members to wall with concrete stub nails, screws designed for masonry attachment, or powder-driven fasteners spaced 24 inches o.c.
3. At exterior corners, attach wide flange of furring members to wall with short flange extending beyond corner; on adjacent wall surface, screw-attach short flange of furring channel to web of attached channel. At interior corners, space second member no more than 12 inches from corner and cut insulation to fit.

G. Installation Tolerance: Install each framing member so fastening surfaces vary not more than 1/8 inch from the plane formed by faces of adjacent framing.

3.5 INSTALLING SUSPENSION SYSTEMS

A. Install suspension system components according to spacings indicated, but not greater than spacings required by referenced installation standards for assembly types.

1. Hangers: 48 inches o.c., unless otherwise indicated.
2. Carrying Channels (Main Runners): 48 inches o.c., unless otherwise indicated.
3. Furring Channels (Furring Members): 16 inches o.c., unless otherwise indicated.

B. Isolate suspension systems from building structure where they abut or are penetrated by building structure to prevent transfer of loading imposed by structural movement.

C. Suspend hangers from building structure as follows:

1. Install hangers plumb and free from contact with insulation or other objects within ceiling plenum that are not part of supporting structural or suspension system.

    a. Splay hangers only where required to miss obstructions and offset resulting horizontal forces by bracing, counter-splaying, or other equally effective means.

2. Where width of ducts and other construction within ceiling plenum produces hanger spacings that interfere with locations of hangers required to support standard suspension system members, install supplemental suspension members and hangers in the form of trapezes or equivalent devices.

    a. Size supplemental suspension members and hangers to support ceiling loads within performance limits established by referenced installation standards.

3. Wire Hangers: Secure by looping and wire tying, either directly to structures or to inserts, eye screws, or other devices and fasteners that are secure and appropriate for substrate, and in a manner that will not cause hangers to deteriorate or otherwise fail.
4. Do not attach hangers to steel roof deck.
5. Do not attach hangers to rolled-in hanger tabs of composite steel floor deck.
6. Do not connect or suspend steel framing from ducts, pipes, or conduit.

D. Fire-Resistance-Rated Assemblies: Wire tie furring channels to supports.

E. Grid Suspension Systems: Attach perimeter wall track or angle where grid suspension systems meet vertical surfaces. Mechanically join main beam and cross-furring members to each other and butt-cut to fit into wall track.

F. Installation Tolerances: Install suspension systems that are level to within 1/8 inch in 12 feet measured lengthwise on each member that will receive finishes and transversely between parallel members that will receive finishes.

END OF SECTION 092216

SECTION 092236.23 - METAL SUSPENSION GYPSUM BOARD CEILING SYSTEM

PART 1 - GENERAL

1.1 RELATED DOCUMENTS

A. Drawings and general provisions of the Contract, including General and Supplementary Conditions and Division 01 Specification Sections, apply to this Section.

1.2 SUMMARY

A. Section Includes:

1. Suspension System Framing and Furring for Plaster and Gypsum Board Assemblies
2. Wire hangers, fasteners, main runners, cross tees, and wall angle moldings.

B. Related Requirements:

1. Division 7 Section “Metal Wall and Soffit Panels”
2. Division 9 Section “Gypsum Board”
3. Division 23 Section “Mechanical Work”
4. Division 26 Section “Electrical Work”

C. Alternates:

1. Prior Approval: Unless otherwise provided for in the Contract documents, proposed product substitutions may be submitted no later than TEN (10) working days prior to the date established for receipt of bids. Acceptability of a proposed substitution is contingent upon the Architect’s review of the proposal for acceptability and approved products will be set forth by the Addenda. If included in a Bid are substitute products that have not been approved by Addenda, the specified products shall be provided without additional compensation.
2. Submittals which do not provide adequate data for the product evaluation will not be considered. The proposed substitution must meet all requirements of this section, including but not necessarily limited to, the following: Single source materials suppliers (if specified in Section 1.5); Furring System component profiles and sizes; Compliance with the referenced standards.

1.3 REFERENCES

A. American Society for Testing and Materials (ASTM):

1. ASTM A 641 Standard Specification for Zinc-Coated (Galvanized) Carbon Steel Wire.
2. ASTM A 653 Standard Specification for Steel Sheet, Zinc-Coated (Galvanized) by the Hot- Dip Process.
3. ASTM A 1008 Standard Specification for Steel, Sheet, Cold Rolled, Carbon, Structural, High-Strength Low-Alloy and High-Strength Low-Alloy with Improved

Formability"

4. ASTM D 610 Standard Test Method for Evaluating Degree of Rusting on Painted Steel Surfaces
5. ASTM B 117 Standard Practice for Operating Salt Spray (Fog) Apparatus
6. ASTM C 635 Standard Specification for Metal Suspension Systems for Acoustical Tile and Lay-in Panel Ceilings.
7. ASTM C 636 Recommended Practice for Installation of Metal Ceiling Suspension Systems for Acoustical Tile and Lay-in Panels.
8. ASTM C 1858 Standard Practice for Design, Construction, and Material Requirements for Direct Hung Suspended T-bar Type Ceiling Systems Intended to Receive Gypsum Panel Products in Areas Subject to Earthquake Ground Motions
9. ASTM C 645 Standard Specification for Nonstructural Steel Framing Members
10. ASTM C 754 Installation of Steel Framing Members to Receive Screw-Attached Gypsum Board
11. ASTM C1002 Standard Specification for Steel Drill Screws for the Application of Gypsum Board or Metal Plaster Bases.
12. ASTM E 119 Standard Test Method for Fire Tests of Building Construction and Material (if applicable).
13. NOA #07-0119.02 Miami/Dade Wind Uplift.
14. NAO #09-0512.02 Miami/Dade Impact.
15. ESR-1289 ICC-ES Evaluation Report.

1.4 PREINSTALLATION MEETINGS

A. Pre-installation Conference: Conduct conference at Project site.

1. Attendees: The Installer and representatives as well as senior technician of manufacturers and fabricators involved in, or affected by the installation, and its coordination or integration with other materials and installations that have preceded or will follow, shall attend the meeting.
2. Review methods and procedures related to resilient flooring including, but not limited to, the following:
   a. Inspect and discuss condition of substrate and other preparatory work performed by other trades.
   b. Review and finalize construction schedule and verify availability of materials, Installer's personnel, equipment, and facilities needed to make progress and avoid delays.
   c. Review special designs and patterns.
   d. Review delivery, storage, and handling procedures.
   e. Review ambient conditions and ventilation procedures.
   f. Review subfloor preparation procedures.

1.5 SUBMITTALS

A. Product Data: For each type of product.

B. Coordination Drawings: Reflected ceiling plans, drawn to scale, on which the following items

are shown and coordinated with each other, using input from installers of the items involved:

1. Suspended ceiling components.
2. Structural members to which suspension systems will be attached.
3. Size and location of initial access modules for panels.
4. Items penetrating finished ceiling including, but not limited to, the following:
   a. Lighting fixtures.
   b. Air outlets and inlets.
   c. Speakers.
   d. Sprinklers.
   e. Access panels.
5. Perimeter moldings.

C. Samples: Contractor shall provide manufacturer’s color PDF images of tile, grout, accessories & transition strips for review & approval. Actual samples are NOT required unless specifically requested by the architect/interior designer.

D. Certifications: Manufacturer's certifications that products comply with specified requirements, including laboratory reports showing compliance with specified tests and standards.

1.6 QUALITY ASSURANCE

A. Single-Source Responsibility: To ensure proper interface, all drywall furring components shall be produced or supplied by a single manufacturer.

B. All accessory components from other manufacturers shall conform to ASTM standards.

C. Fire Resistance Ratings: As indicated by reference to design designations in UL Fire Resistance Directory, for types of assemblies in which drywall ceilings function as a fire protective membrane and tested per ASTM E 119. Installation in accordance with the UL Design being referenced.

D. Coordination of Work:

1. Coordinate drywall furring work with installers of related work including, but not limited to acoustical ceilings, building insulation, gypsum board, light fixtures, mechanical systems, electrical systems, and sprinklers.
2. All work above the ceiling line should be completed prior to installing the drywall sheet goods. There should be no materials resting against or wrapped around the suspension system, hanger wires or ties.

1.7 DELIVERY, STORAGE, AND HANDLING

A. Deliver materials to project site in original, unopened packages and store them in a fully enclosed space where they will be protected against damage from moisture, direct sunlight, surface contamination, and other causes.

1.8 WARRANTY

A. Suspensions System: Submit a written limited warranty executed by the manufacturer, agreeing to repair or replace grid components that are supplied with a hot-dipped galvanized coating or
aluminum base material. Failures include, but are not limited to:
The occurrence of 50% red rust as defined by ASTM D 610 test procedures as a result of defects in materials or factory workmanship.

B. Warranty Period: Grid: Ten years from date of installation.

C. The Warranty shall not deprive the Owner of other rights the Owner may have under other provisions of the Contract Documents and will be in addition to and run concurrent with other warranties made by the Contractor under the requirements of the Contract Documents.

PART 2 – PRODUCTS

2.1 MANUFACTURERS

A. Suspension Systems: Armstrong World Industries, Inc.

1. Rep Contact information:

a. Full Line Sales Manager – Central PA
Ben Hinkle (bmhinkle@armstrongceilings.com /+1 717-719-3764)
b. Integrated Solution Sales Manager – Mid Atlantic
Nate Canfjin (nhcanfijn@armstrongceilings.com / +1 717-471-8040)

2.2 SUSPENSION SYSTEMS

A. Components:

1. FrameAll Main Beam: Shall be double-web construction (minimum 0.0179 inch prior to protective coating, ASTM C645), hot dipped galvanized (per ASTM A653).
   a. HD8906/HD890610: 1-11/16 inch web height, 1-1/2 inch flange, available with G40 or G90 hot dipped galvanization.
2. FrameAll Primary Cross Tees: Shall be double-web steel construction (minimum 0.0179 inch prior to protective coating, ASTM C645), hot dipped galvanized (minimum G40 or G90 per ASTM A653)
   a. XL8945P: 48 inch, web height 1-1/2 inch with rectangular bulb and pre-finished 1-1/2 inch knurled flange
3. FrameAll Wall Molding:
   a. KAM151220E: 12 foot Knurled Angle molding, 1-1/2 inch x 1-1/2 inch, knurled surface, screw stop hem, pre-punched holes in top flange 4” O.C., .028 mil. 22g
4. FrameAll Transition Molding: Drywall to Acoustical ceiling.
   a. Pre-Painted Armstrong Global White integral acoustical flange and

drywall taping flange, hot dipped cold rolled steel.

5. FrameAll Simple Soffit Molding: Drywall ceiling to drywall soffit.
    a. Pre-Painted Armstrong Global White integral acoustical flange and drywall taping flange, hot dipped cold rolled steel.
        A. SSLU: 1-1/2-inches by 1-1/4-inches 'L' Soffit Upturn. Refer to drawings for ceiling heights.

B. Structural Classification:

1. Main Beam shall be heavy duty per ASTM C 635.
2. Classification can require wires to be closer together for additional loading when used to support double layer gypsum, verticals, slopes, domes, half barrels, circles, soffits, canopies, and step conditions which call for loading or unusual designs and shapes in drywall construction. Using cross tees in the construction of circles, barrels, etc. is common in order to hold the radius.
3. Deflection of fastening suspension system supporting light fixtures, ceiling grilles, access doors, verticals and horizontal loads shall have a maximum deflection of 1/360 of the span.

PART 3 – EXECUTION

3.1 INSTALLATION - GENERAL

A. Install suspension system and panels in accordance with the manufacturer's instructions, in compliance with ASTM installation standard, and with applicable codes as required by the authorities having jurisdiction.

B. The Armstrong Drywall Grid System can be installed in interior or exterior applications.

C. To secure to metal clips, concrete inserts, steel bar joist or steel deck, use power actuated fastener, or insert. Coordinate placement for hanger wire spaced as required for expected ceiling loads and layout.

D. Install hanger wire as required with necessary on center spacing to support expected ceiling load requirements, following local practices, codes and regulations. Provide additional wires at light fixtures, grilles, and access doors where necessary. A pigtail knot shall be used with three tight wraps at top and bottom fastening locations.

E. Add additional wire as needed when using compatible clips and accessories.

F. Control Joints: Roll formed zinc alloy, aluminum, or plastic as required for expansion and contraction as shown on drawings.

G. Expansion Joints: Roll formed zinc alloy, aluminum, or plastic as required for expansion and contraction as shown on drawings.

H. Main beams shall be suspended from the overhead construction with hanger wire, spaced as required for expected ceiling loads, along the length of the main beams.

I. Install cross tees at on center spacing as specified by the drywall manufacturer. Typical drywall cross tee spacing:

   1. 16 inches on center with 5/8 or 1/2 inch gypsum board.
   2. 24 inches on center with 5/8 inch gypsum board.

J. Other items such as wood, sheet metal, or plastic panels should be screwed to comply with deflection limit equivalent to that of the ceiling installation.

K. Use channel molding or angle molding to interface with Drywall Grid System to provide perimeter attachment or to obtain drop soffits, verticals, slopes, etc.

L. To suspend a second ceiling beneath a new or existing drywall ceiling, without breaching the integrity of the upper ceiling, use the Drywall Clip. To form a transition from a drywall ceiling to an acoustical ceiling, use the Drywall Transition Clips spaced as required for expected loads.

M. For light fixtures (Type G, Type F) use secondary framing cross tees as required to frame opening.

N. Single cross tees in a route hole to be secured by 7/16 inch framing screw or alternative methods.

3.2 INSTALLATION - INTERIOR APPLICATIONS

A. Install main beams and cross tees at the on center spacing required for ceiling loading, and location of in-ceiling services.

B. Additional bracing as required by code.

END OF SECTION 092236.23

SECTION 092900 - GYPSUM BOARD

PART 1 - GENERAL

1.1 RELATED DOCUMENTS

A. Drawings and general provisions of the Contract, including General and Supplementary Conditions and Division 1 Specification Sections, apply to this Section.

1.2 SUMMARY

A. This Section includes the following:

1. Interior gypsum board.
2. Specialty gypsum board.
3. Exterior glass-mat gypsum board.
4. Tile backing panels.
5. Trims and Accessories.
6. Joint treatment materials.
7. Sound attenuation blankets, acoustical sealants and other auxiliary materials.

B. Related Sections include the following:

C.

1. Division 4 Section “Unit Masonry (Assemblies)” for gypsum sheathing, and for cavity air barrier installed over gypsum sheathing.
2. Division 5 Section “Cold-Formed Metal Framing” for structural framing and suspension systems that support gypsum board panels.
3. Division 7 Section “Thermal Insulation” for thermal insulation.
4. Division 9 Section "Non-Structural Metal Framing" for non-structural steel framing and suspension systems that support gypsum board panels.

1.3 SUBMITTALS

A. Product Data: For each type of product.

B. Samples: For the following products:

1. Trim Accessories: Full-size Sample in 12-inch-long length for each trim accessory indicated.

C. Samples for Initial Selection: For each type of trim accessory indicated.

1.4 DELIVERY, STORAGE AND HANDLING

A. Store materials inside under cover and keep them dry and protected against weather, condensation, direct sunlight, construction traffic, and other potential causes of damage. Stack panels flat and supported on risers on a flat platform to prevent sagging.

1.5 FIELD CONDITIONS

A. Environmental Limitations: Comply with ASTM C840 requirements or gypsum board manufacturer's written instructions, whichever are more stringent.

B. Do not install paper-faced gypsum panels until installation areas are enclosed and conditioned.

C. Do not install panels that are wet, moisture damaged, and mold damaged.

1. Indications that panels are wet or moisture damaged include, but are not limited to, discoloration, sagging, or irregular shape.
2. Indications that panels are mold damaged include, but are not limited to, fuzzy or splotchy surface contamination and discoloration.

PART 2 - PRODUCTS

2.1 PERFORMANCE REQUIREMENTS

A. Fire-Resistance-Rated Assemblies: For fire-resistance-rated assemblies, provide materials and construction identical to those tested in assembly indicated according to ASTM E119 by an independent testing agency.

B. STC-Rated Assemblies: For STC-rated assemblies, provide materials and construction identical to those tested in assembly indicated according to ASTM E90 and classified according to ASTM E413 by an independent testing agency.

2.2 GYPSUM BOARD, GENERAL

A. Size: Provide maximum lengths and widths available that will minimize joints in each area and that correspond with support system indicated.

2.3 INTERIOR GYPSUM BOARD

A. Manufacturers: Subject to compliance with requirements, available manufacturers offering products that may be incorporated into the Work include, but are not limited to, the following:

1. American Gypsum.
2. CertainTeed Corp.
3. Georgia-Pacific Gypsum LLC.
4. National Gypsum Company.
5. USG Corporation.

B. Regular Gypsum Wallboard: ASTM C1396.

1. Thickness: 5/8 inch.
2. Long Edges: Tapered.
3. Applications - General: Offices, conference rooms and similar low impact locations.
4. Applications – Specific: Base and face layers to multi-layer, low impact, non-fire-rated assemblies, and all wall and bulkhead locations 8’-0” and higher above finished floor.

C. Gypsum Board, Type X: ASTM C1396.

1. Thickness: 5/8 inch.
2. Long Edges: Tapered.
3. Applications - General: Low impact, fire-rated wall, partition and ceiling applications where another specific type of gypsum wallboard is not required based on defined uses or the requirements of a specific UL Assembly.
4. Applications – Specific: Base layer of multi-layer, fire-rated wall and partition applications where another specific Type X gypsum board is required based upon defined use or the requirements of a specific UL Assembly.

D. Gypsum Ceiling Board: ASTM C1396.

1. Thickness: 5/8 inch.
2. Long Edges: Tapered.
3. Applications: Non-fire-rated ceilings locations.

E. Abuse-Resistant Gypsum Board: ASTM C1396 gypsum board, tested according to ASTM C1629.

1. Core: 5/8-inch, Type X.
2. Surface Abrasion: ASTM D4977, meets or exceeds Level 2 requirements.
3. Indentation: ASTM D5420, meets or exceeds Level 1 requirements.
4. Soft-Body Impact: ASTM E695, meets or exceeds Level 2 requirements.
5. Hard-body Impact: ASTM 1629, meets or exceeds Level 1 requirements.
6. Long Edges: Tapered.
7. Mold Resistance: ASTM D3273, score of 10 as rated according to ASTM D3274.
8. Applications – General: Corridor walls up to 8’-0” (except where wall tile is the finish, use tile backing panels), classroom, small group instruction and other educational type rooms up to 8’-0”, stair towers, including the underside of stair runs, and similar locations subject to moderate abuse.
9. Applications – Specific: Face layer of multi-layer, fire-rated wall and partition assemblies where abuse-resistant gypsum board is required based upon defined use.

F. Moisture and Mold-Resistant Gypsum Board: ASTM C1396. With moisture and mold-resistant core and paper surfaces.

1. Core: 5/8 inch, Type X.
2. Long Edges: Tapered.
3. Mold Resistance: ASTM D3273, score of 10 as rated according to ASTM D3274.

4. Applications - General: Wall and ceiling assemblies in toilet rooms, shower rooms, locker rooms and similar type rooms subject to moisture and humidity where the final wall finish is paint.
5. Applications – Specific: Face layer of multi-layer, fire-rated wall and partition assemblies where moisture and mold-resistant gypsum board is required based upon defined use.

G. Flexible Gypsum Board: ASTM C1396; manufactured to bend to fit radii and to be more flexible than standard regular-type gypsum board of same thickness.

1. Thickness: 1/4 inch.
2. Long Edges: Tapered.
3. Applications: Non-fire-rated curved walls and ceilings.

2.4 SPECIALTY GYPSUM BOARD

A. Gypsum Board, Type C: ASTM C1396. Manufactured to have increased fire-resistive capability.

1. Manufacturers: Subject to compliance with requirements, available manufacturers offering products that may be incorporated into the Work include, but are not limited to the following:

a. American Gypsum.
b. CertainTeed Corp.
c. Georgia-Pacific Gypsum LLC.
d. National Gypsum Company.
e. USG Corporation.

2. Thickness: As required by fire-resistance-rated assembly indicated on Drawings.
3. Long Edges: Tapered.
4. Applications: Fire-rated wall, partition and ceiling assemblies where required by a specific UL Assembly.

2.5 EXTERIOR GYPSUM BOARD

A. Glass-Mat Gypsum Sheathing Board: ASTM C1177, with fiberglass mat laminated to both sides and with manufacturer's standard edges.

1. Manufacturers: Subject to compliance with requirements, available manufacturers offering products that may be incorporated into the Work include, but are not limited to the following:

a. Georgia-Pacific Gypsum LLC; DensGlass Sheathing.
b. CertainTeed Corporation; GlasRoc Sheathing.
c. National Gypsum Company; Gold Bond eXP Sheathing.
d. USG Corporation; Securock Glass-Mat Sheating.

2. Core: 5/8-inch, Type X.
3. Edges: Square.
4. Surface+

5. : Fiberglass mat on face, back and long edges.
6. Microbial Resistance: ASTM D6329, will not support microbial growth.
7. Mold Resistance: ASTM D3273, score of 10 as rated according to ASTM D3274.
8. Humidity Deflection: ASTM C1177, not more than 1/8-inch.
9. Permeance: ASTM E96, not less than 17 perms.
10. Applications: All exterior gypsum board substrate boards.

2.6 TILE BACKING PANELS

A. Glass-Mat, Water-Resistant Backing Board: ASTM C1178, with manufacturer's standard edges.

1. Manufacturers: Subject to compliance with requirements, available manufacturers offering products that may be incorporated into the Work include, but are not limited to the following:

a. CertainTeed Corporation; GlasRoc Tile Backer.
b. Georgia-Pacific Gypsum LLC; DensShield.
c. National Gypsum Company; Gold Bond eXP Tile Backer.
d. USG Corporation; Durock Glass-Matt Tile Backerboard.

2. Core: As indicated on Drawings.
3. Mold Resistance: ASTM D3273, score of 10 as rated according to ASTM D3274.
4. Applications: Substrate board for all interior ceramic and porcelain tile finishes.

2.7 TRIMS AND ACCESSORIES

A. Interior Trim: ASTM C1047.

1. Material: Galvanized or aluminum-coated steel sheet, rolled zinc, plastic, or paper-faced galvanized-steel sheet.
2. Manufacturers: Subject to compliance with requirements, manufacturers offering products that may be incorporated into the Work include, but are not limited to, the following:

a. United States Gypsum Co.
b. National Gypsum Co.
c. Georgia-Pacific Corp.
d. Fry Reglet Corporation.
e. Gordon Inc.
f. Pittcon Industries.

3. Shapes:

a. Cornerbead.
b. LC-Bead: J-shaped; exposed long flange receives joint compound.
c. L-Bead: L-shaped; exposed long flange receives joint compound.
d. U-Bead: J-shaped; exposed short flange does not receive joint compound.

e. Expansion (control) joint; one-piece, formed with V-shaped slot and removable strip covering slot opening.

B. Exterior Trim: ASTM C1047.

1. Material: Hot-dip galvanized-steel sheet, plastic, or rolled zinc.
2. Shapes:

a. Cornerbead.
b. LC-Bead: J-shaped; exposed long flange receives joint compound.
c. Expansion (Control) Joint: One-piece, rolled zinc with V-shaped slot and removable strip covering slot opening.

C. Reveals: Where specifically indicated and exposed to view; interior architectural, decorative gypsum board reveal channels and control joints; extruded accessories of profiles and dimensions indicated.

1. Material: Aluminum; alloy and temper with not less than the strength and durability properties of ASTM B221, Alloy 6063-T5.
2. Finish: Provide corrosion-resistant primer compatible with joint compound and finish materials specified. Provide in manufacturer's standard Class I or II clear anodic finish; reveal trim shall be painted where indicated on Drawings.
3. Manufacturers: Subject to compliance with requirements, manufacturers offering products that may be incorporated into the Work include, but are not limited to, the following:

a. Fry Reglet Corp.
b. Gordon Inc.
c. Pittcon Industries.

4. Shapes: Provide the following, where indicated; provide control joints where indicated or as required per standards:

a. Standard Reveals: Equal to Fry Reglet Corp. "Channel Screed Reveal;" 1/4-inch width, unless otherwise noted; for use on ceiling and horizontal or vertical (non-control joint) applications.
b. Wall-Ceiling Reveals: Equal to Fry Reglet Corp. "'F' Reveal;" 1/4-inch width, unless otherwise noted; for horizontal wall-to-ceiling or vertical wall-to-wall applications.
c. Control Joints: Equal to Fry Reglet Corp. "2-Piece Control Joint;" 1/4-inch width, unless otherwise noted; for use on ceiling and vertical control joint applications.
d. Provide other shapes if specifically indicated on Drawings.

D. Corner Trim: Apply to all outside corners.

1. Basis of design product: Fry Reglet; Number DMCT-1250.
2. Manufacturers: Subject to compliance with requirements, manufacturers offering products that may be incorporated into the Work include, but are not limited to, the following:

a. Fry Reglet Corp.

3. Characteristics:

a. Description: Trim shall finish and protect outside corners.
b. Material: Extruded aluminum.
c. Dimensions: As indicated on drawings.
d. Finish: Chemical conversion coating to receive painted finish in field.

E. Perimeter Trim: Apply to all bottom and sides of Feature Walls.

1. Basis of design product: Fry Reglet; Number DRML-150.
2. Manufacturers: Subject to compliance with requirements, manufacturers offering products that may be incorporated into the Work include, but are not limited to, the following:

a. Fry Reglet Corp.

3. Characteristics:

a. Description: Trim shall finish and protect outside edges.
b. Material: Extruded aluminum.
c. Dimensions: As indicated on drawings.
d. Finish: Clear Anodized

F. Drywall Vents: Flush steel vents specifically designed for wall and ceiling drywall applications. Vents to include adjustable air flow blades, a removable, powder-coated tray to be finished (painted) to match the wall, and integral drywall finishing beads.

1. Basis of Design Product: Drywall Pro Vents by Aria Vent.
2. Material: Steel.
3. Color: Satin white.
4. Size: As indicated on Drawings.
5. Locations: Where indicated on Drawings.

2.8 JOINT TREATMENT MATERIALS

A. General: Comply with ASTM C475.

B. Joint Tape:

1. Interior Gypsum Board: Paper.
2. Exterior Gypsum Soffit Board: Paper.
3. Glass-Mat Gypsum Sheathing Board: 10-by-10 glass mesh.
4. Tile Backing Panels: As recommended by panel manufacturer.

C. Joint Compound for Interior Gypsum Board: For each coat, use formulation that is compatible with other compounds applied on previous or for successive coats.

1. Prefilling: At open joints, rounded or beveled panel edges, and damaged surface areas, use setting-type taping compound.
2. Embedding and First Coat: For embedding tape and first coat on joints, fasteners, and trim flanges, use setting-type or drying-type, all-purpose compound.

    a. Use setting-type compound for installing paper-faced metal trim accessories.

3. Fill Coat: For second coat, use drying-type, all-purpose compound.
4. Finish Coat: For third coat, use drying-type, all-purpose compound.

D. Joint Compound for Exterior Applications:

1. Exterior Gypsum Soffit Board: Use setting-type taping compound and setting-type, sandable topping compound.
2. Glass-Mat Gypsum Sheathing Board: As recommended by sheathing board manufacturer.

E. Joint Compound for Tile Backing Panels:

1. Glass-Mat, Water-Resistant Backing Panel: As recommended by backing panel manufacturer.
2. Water-Resistant Gypsum Backing Board: Use setting-type taping compound and setting-type, sandable topping compound.

2.9 AUXILIARY MATERIALS

A. General: Provide auxiliary materials that comply with referenced installation standards and manufacturer's written instructions.

B. Laminating Adhesive: Adhesive or joint compound recommended for directly adhering gypsum panels to continuous substrate.

C. Steel Drill Screws: ASTM C1002 unless otherwise indicated.

1. Use screws complying with ASTM C954 for fastening panels to steel members from 0.033 to 0.112 inch (0.84 to 2.84 mm) thick.
2. For fastening cementitious backer units, use screws of type and size recommended by panel manufacturer.

D. Sound-Attenuation Blankets: ASTM C665, Type I (blankets without membrane facing) produced by combining thermosetting resins with mineral fibers manufactured from glass, slag wool, or rock wool.

1. Fire-Resistance-Rated Assemblies: Comply with mineral-fiber requirements of assembly.

E. Acoustical Sealant: Manufacturer's standard non-sag, paintable, non-staining latex sealant complying with ASTM C834. Product effectively reduces airborne sound transmission through perimeter joints and openings in building construction as demonstrated by testing representative assemblies according to ASTM E90.

1. Manufacturers: Subject to compliance with requirements, available manufacturers offering products that may be incorporated into the Work include, but are not limited to, the following:

    a. Accumetric LLC; “BOSS 826 Acoustical Sound Sealant.”
    b. Franklin International; “Titebond Acoustical Smoke & Sound Sealant.”
    c. Grabber Construction Products; “Acoustical Smoke & Sound Sealant.”
    d. Hilti, Inc.; “CP 506.”
    e. Pecora Corporation; “AIS-919.”
    f. Specified Technologies, Inc.; “Smoke ‘N’ Sound Acoustical Sealant.”
    g. United States Gypsum Co.; “USG Sheetrock Brand Acoustical Sealant.”

PART 3 - EXECUTION

3.1 EXAMINATION

A. Examine areas and substrates including welded hollow-metal frames and support framing, with Installer present, for compliance with requirements and other conditions affecting performance of the Work.

B. Examine panels before installation. Reject panels that are wet, moisture damaged, and mold damaged.

C. Proceed with installation only after unsatisfactory conditions have been corrected.

3.2 APPLYING AND FINISHING PANELS, GENERAL

A. Comply with ASTM C840.

B. Install ceiling panels across framing to minimize the number of abutting end joints and to avoid abutting end joints in central area of each ceiling. Stagger abutting end joints of adjacent panels not less than one framing member.

C. Install panels with face side out. Butt panels together for a light contact at edges and ends with not more than 1/16 inch of open space between panels. Do not force into place.

D. Locate edge and end joints over supports, except in ceiling applications where intermediate supports or gypsum board back-blocking is provided behind end joints. Do not place tapered edges against cut edges or ends. Stagger vertical joints on opposite sides of partitions. Do not make joints other than control joints at corners of framed openings.

E. Form control and expansion joints with space between edges of adjoining gypsum panels.

F. Cover both faces of support framing with gypsum panels in concealed spaces (above ceilings, etc.), except in chases braced internally.

    1. Unless concealed application is indicated or required for sound, fire, air, or smoke ratings, coverage may be accomplished with scraps of not less than 8 sq. ft. (0.7 sq. m) in area.

2. Fit gypsum panels around ducts, pipes, and conduits.
3. Where partitions intersect structural members projecting below underside of floor/roof slabs and decks, cut gypsum panels to fit profile formed by structural members; allow 1/4 to 3/8-inch wide joints to install sealant.

G. Isolate perimeter of gypsum board applied to non-load-bearing partitions at structural abutments. Provide 1/4 to 1/2-inch wide spaces at these locations and trim edges with edge trim where edges of panels are exposed. Seal joints between edges and abutting structural surfaces with acoustical sealant.

H. Attachment to Steel Framing: Attach panels so leading edge or end of each panel is attached to open (unsupported) edges of stud flanges first.

I. STC-Rated Assemblies: Seal construction at perimeters, behind control joints, and at openings and penetrations with a continuous bead of acoustical sealant. Install acoustical sealant at both faces of partitions at perimeters and through penetrations. Comply with ASTM C919 and with manufacturer's written instructions for locating edge trim and closing off sound-flanking paths around or through assemblies, including sealing partitions above acoustical ceilings.

J. Install sound attenuation blankets before installing gypsum panels unless blankets are readily installed after panels have been installed on one side.

3.3 APPLYING INTERIOR GYPSUM BOARD

A. Install interior gypsum board in the following locations:

1. Wallboard Type: As indicated by type above.
2. Type X: Where required for fire-resistance-rated assembly.
3. Ceiling Type: Ceiling surfaces.
4. Abuse-Resistant Type: As indicated by type above.
5. Mold-Resistant Type: As indicated by type above.
6. Flexible Type: Apply in double layer at curved assemblies.
7. Type C: Where required for specific fire-resistance-rated assembly indicated.
8. Glass-Mat Interior Type: As indicated on Drawings.
9. Acoustically Enhanced Type: As indicated on Drawings.

B. Single-Layer Application:

1. On ceilings, apply gypsum panels before wall/partition board application to greatest extent possible and at right angles to framing unless otherwise indicated.
2. On partitions/walls, apply gypsum panels horizontally (perpendicular to framing) unless otherwise indicated or required by fire-resistance-rated assembly, and minimize end joints.

    a. Stagger abutting end joints not less than one framing member in alternate courses of panels.
    b. At stairwells and other high walls, install panels horizontally unless otherwise indicated or required by fire-resistance-rated assembly.

3. On Z-furring members, apply gypsum panels vertically (parallel to framing) with no end joints. Locate edge joints over furring members.
4. Fastening Methods: Apply gypsum panels to supports with steel drill screws.

C. Multilayer Application:

1. On ceilings, apply gypsum board indicated for base layers before applying base layers on walls/partitions; apply face layers in same sequence. Apply base layers at right angles to framing members and offset face-layer joints one framing member, 16 inches minimum, from parallel base-layer joints, unless otherwise indicated or required by fire-resistance-rated assembly.
2. On partitions/walls, apply gypsum board indicated for base layers and face layers vertically (parallel to framing) with joints of base layers located over stud or furring member and face-layer joints offset at least one stud or furring member with base-layer joints unless otherwise indicated or required by fire-resistance-rated assembly. Stagger joints on opposite sides of partitions.
3. Fastening Methods: Fasten base layer with screws; fasten face layers with adhesive and supplementary fasteners.

D. Laminating to Substrate: Where gypsum panels are indicated as directly adhered to a substrate (other than studs, joists, furring members, or base layer of gypsum board), comply with gypsum board manufacturer's written instructions and temporarily brace or fasten gypsum panels until fastening adhesive has set.

E. Curved Surfaces:

1. Install panels horizontally (perpendicular to supports) and unbroken, to extent possible, across curved surface plus 12-inch-long straight sections at ends of curves and tangent to them.
2. For double-layer construction, fasten base layer to studs with screws 16 inches o.c. Center gypsum board face layer over joints in base layer, and fasten to studs with screws spaced 12 inches o.c.

3.4 APPLYING EXTERIOR GYPSUM PANELS

A. Apply panels perpendicular to supports, with end joints staggered and located over supports.

1. Install with 1/4-inch open space where panels abut other construction or structural penetrations.
2. Fasten with corrosion-resistant screws.

3.5 APPLYING TILE BACKING PANELS

A. Glass-Mat, Water-Resistant Backing Panels: Comply with manufacturer's written installation instructions and install at locations indicated to receive tile. Install with 1/4 inch gap where panels abut other construction or penetrations.

B. Water-Resistant Backing Board: Install where indicated with 1/4 inch gap where panels abut other construction or penetrations.

C. Where tile backing panels abut other types of panels in same plane, shim surfaces to produce a uniform plane across panel surfaces.

3.6 INSTALLING TRIM ACCESSORIES

A. General: For trim with back flanges intended for fasteners, attach to framing with same fasteners used for panels. Otherwise, attach trim according to manufacturer's written instructions.

B. Control Joints: Install control joints at locations indicated on Drawings, and if not indicated, according to ASTM C840 and in specific locations approved by Architect for visual effect.

C. Interior Trim: Install in the following locations:

1. Cornerbead: Use at outside corners.
2. LC-Bead: Use at exposed panel edges.
3. L-Bead: Use where required based upon installed condition.
4. U-Bead: Use where required based upon installed condition.

D. Exterior Trim: Install in the following locations:

1. Cornerbead: Use at outside corners.
2. LC-Bead: Use at exposed panel edges.
3. Curved-Edge Cornerbead: Use at curved openings.

3.7 FINISHING GYPSUM BOARD

A. General: Treat gypsum board joints, interior angles, edge trim, control joints, penetrations, fastener heads, surface defects, and elsewhere as required to prepare gypsum board surfaces for decoration. Promptly remove residual joint compound from adjacent surfaces.

B. Prefill open joints, rounded or beveled edges, and damaged surface areas.

C. Apply joint tape over gypsum board joints, except for trim products specifically indicated as not intended to receive tape.

D. Gypsum Board Finish Levels: Finish panels to levels indicated below and according to ASTM C840:

1. Level 1: Ceiling plenum areas, concealed areas, and where indicated.
2. Level 2: Panels that are substrate for tile.
3. Level 3: Only where indicated on Drawings.
4. Level 4: At panel surfaces that will be exposed to view in the finished project, unless otherwise indicated.

5. Level 5: At panel surfaces that will receive vinyl wall coverings or other similar graphic material finishes.

E. Glass-Mat Gypsum Sheathing Board: Finish according to manufacturer's written instructions for use as exposed soffit board.

F. Glass-Mat Faced Panels: Finish according to manufacturer's written instructions.

3.8 PROTECTION

A. Protect adjacent surfaces from drywall compound and promptly remove from floors and other non-drywall surfaces. Repair surfaces stained, marred, or otherwise damaged during drywall application.

B. Protect installed products from damage from weather, condensation, direct sunlight, construction, and other causes during remainder of the construction period.

C. Remove and replace panels that are wet, moisture damaged, and mold damaged.

1. Indications that panels are wet or moisture damaged include, but are not limited to, discoloration, sagging, or irregular shape.
2. Indications that panels are mold damaged include, but are not limited to, fuzzy or splotchy surface contamination and discoloration.

END OF SECTION 092900

SECTION 093000 – TILING

PART 1 - GENERAL

1.1 RELATED DOCUMENTS

A. Drawings and general provisions of the Contract, including General and Supplementary Conditions and Division 01 Specification Sections, apply to this Section.

1.2 SUMMARY

A. Section Includes:

1. Glazed porcelain wall tile.
2. Porcelain wall tile.
3. Unglazed ceramic mosaic tile.
4. Waterproof/crack isolation membrane.
5. Metal edge strips.

B. Related Requirements:

1. Division 7 Section "Joint Sealants" for sealing of expansion, contraction, control, and isolation joints in tile surfaces.
2. Division 9 Section “Gypsum Board” for tile backing panels.

1.3 DEFINITIONS

A. General: Definitions in the ANSI A 108 series of tile installation standards and in ANSI A137.1 and ANSI A137.3 apply to Work of this Section unless otherwise specified.

B. ANSI A108 Series: ANSI A 108.01, 108.02, 108.1A, 108.1B, 108.1C, 108.4 through 108.6, and 108.8 through 108.17, ANSI 108.19 which are contained in "American National Standard Specifications for Installation of Ceramic Tile."

C. Module Size: Actual tile size plus joint width indicated.

D. Face Size: Actual tile size, excluding spacer lugs.

1.4 PREINSTALLATION MEETINGS

A. Preinstallation Conference: Conduct conference at Project site.

1. Review requirements in ANSI A108.01 for substrates and for preparation by other trades.
2. Require attendance of installation material manufacturer, tile supplier, tile installer and installers of related work. Review installation procedures and coordination required with related work.

3. Meeting agenda includes but is not limited to:

    a. Tile and installation material compatibility.
    b. Grouting procedure.
    c. Maintenance and cleaning products and methods.
    d. Surface preparation.

1.5 ACTION SUBMITTALS

A. Product Data: For each type of product indicated.

B. Shop Drawings: Show locations of each type of tile and tile pattern. Show widths, details, and locations of expansion, contraction, control, and isolation joints in tile substrates and finished tile surfaces.

C. Samples: Contractor shall provide manufacturer's color PDF images of tile, grout, accessories & transition strips for review & approval. Actual samples are NOT required unless specifically requested by the architect/interior designer.

1.6 INFORMATIONAL SUBMITTALS

A. Qualification Data: For qualified Installer.

B. Master Grade Certificates: For each shipment, type, and composition of tile, signed by tile manufacturer and Installer.

C. Product Certificates: For each type of product, signed by product manufacturer.

D. Material Test Reports: For each tile-setting and grouting product.

1.7 MAINTENANCE MATERIAL SUBMITTALS

A. Furnish extra materials that match and are from same production runs as products installed and that are packaged with protective covering for storage and identified with labels describing contents.

    1. Tile and Trim Units: Furnish quantity of full-size units equal to 3 percent of amount installed for each type, composition, color, pattern, and size indicated.
    2. Grout: Furnish quantity of grout equal to 3 percent of amount installed for each type, composition, and color indicated.

1.8 QUALITY ASSURANCE

A. Source Limitations for Tile: Obtain tile from one source or producer.

    1. Obtain tile of each type and color or finish from same production run and of consistent quality in appearmsance and physical properties for each contiguous area.

B. Source Limitations for Setting and Grouting Materials: Obtain ingredients of a uniform quality for each mortar, adhesive, and grout component from one manufacturer and each aggregate from one source or producer.

C. Source Limitations for Other Products: Obtain each of the following products specified in this Section from a single manufacturer for each product:

1. Waterproof Membrane
2. Metal edge strips.
3. Joint sealants.

D. Mockups: Build mockups to verify selections made under sample submittals and to demonstrate aesthetic effects and set quality standards for materials and execution.

1. Build mockup of each type of wall tile installation with metal edge strips. Coordinate location with Owner and Architect. Do not order tile and metal edge strips until site mock up is approved by the architect and the owner.
2. Approved mockups may become part of the completed Work if undisturbed at time of Substantial Completion.

1.9 DELIVERY, STORAGE, AND HANDLING

A. Deliver and store packaged materials in original containers with seals unbroken and labels intact until time of use. Comply with requirements in ANSI A137.1 and ANSI A137.3 for labeling tile packages.

1. Gauged Porcelain Tile Panels/Slabs: Tiles shall be delivered directly to job site. Entire shipment must be inspected and a signed for receipt must be given. Crates must be moved by forklift extender.

B. Store tile and materials on elevated platforms, under cover, and in a dry location.

C. Store aggregates where grading and other required characteristics can be maintained and contamination can be avoided.

D. Store liquid materials in unopened containers and protected from freezing.

E. Handle tile that has temporary protective coating on exposed surfaces to prevent coated surfaces from contacting backs or edges of other units. If coating does contact bonding surfaces of tile, remove coating from bonding surfaces before setting tile.

1.10 PROJECT CONDITIONS

A. Environmental Limitations: Do not install tile until construction in spaces is complete and ambient temperature and humidity conditions are maintained at the levels indicated in referenced standards and manufacturer's written instructions.

PART 2 - PRODUCTS

2.1 PRODUCTS, GENERAL

A. ANSI Ceramic Tile Standard: Provide tile that complies with ANSI A 137.1 and ANSI A137.3 for types, compositions, and other characteristics indicated.

1. Provide tile complying with Standard grade requirements unless otherwise indicated.

B. ANSI Standards for Tile Installation Materials: Provide materials complying with ANSI A 108.02, ANSI standards referenced in other Part 2 articles, ANSI standards referenced by current edition TCNA Handbook Ceramic, Glass and Stone Tile Installation and TCNA Handbook for Gauge Porcelain Tile and Gauge Porcelain Tile Panels/Slab methods specified in tile installation schedules, and other requirements specified.

C. Mounting: For factory-mounted tile, provide back- or edge-mounted tile assemblies as standard with manufacturer unless otherwise indicated.

1. Where tile is indicated for installation in wet areas, do not use back- or edge-mounted tile assemblies unless tile manufacturer specifies in writing that this type of mounting is suitable for installation indicated and has a record of successful in-service performance.

D. Tile - Type (PT1): Glazed ceramic wall tile.

1. Manufacturers: Subject to compliance with requirements, provide products by the following:

a. Dal-Tile.

2. Series: Color Wheel Linear.
3. Composition: Ceramic.
4. Module Size: 6 inches by 18 inches.
5. Thickness: 3/8-inch.
6. Tile Color/Finish: 0790 Matte Arctic White and 0180 Chalkboard.
7. Finish: Matte.
8. Grout Color: As selected from manufacturer’s full range of colors.
9. Installation Pattern: 1/3 Staggered Vertical Bond. Refer to Drawings.
10. Trim:
    a. Bullnose: 2 inches by 8 inches.

E. Tile - Type (PT2): Porcelain wall tile.

1. Manufacturers: Subject to compliance with requirements, provide products by the following:

a. Garden State Tile

2. Series: Arkstone Refine.
3. Composition: Porcelain
4. Module Size: 18 inches by 36 inches.
5. Thickness: 8mm.

6. Tile Color: White
7. Grout Color: As selected from manufacturer's full range of colors.
8. Installation Pattern: Straight Stack Bond

F. Tile – Type (PT3): Factory-mounted unglazed porcelain mosaic wall tile.

1. Manufacturers: Subject to compliance with requirements, provide products by the following:

   a. Daltile.

2. Series: Keystones.
3. Composition: Porcelain.
4. Module Size: 2 inches by 2 inches.
5. Thickness: 1/4-inch.
6. Tile Color/Finish: As selected by Architect from manufacturer's full range. Price Group: 1.
7. Finish: Matte.
8. Grout Color: As selected from manufacturer's full range of colors.
9. Installation Pattern: Straight Stack Bond.
10. Trim: Coordinated with sizes and coursing of adjoining flat tile where applicable and matching characteristics of adjoining flat tile. Provide shapes as follows, selected from manufacturer's standard shapes:

    a. Bullnose: 2-inches by 2-inches.
    b. Bullnose Corner: 2-inches by 2-inches.

G. Tile – Type (PT4): Glazed ceramic wall tile.

1. Manufacturers: Subject to compliance with requirements, provide products by the following:

   a. Daltile.

2. Series: Color Wheel Classic.
3. Composition: Ceramic.
4. Module Size: 4 inches by 4 inches.
5. Thickness: 1/4-inch.
6. Tile Color/Finish: As selected by Architect from manufacturer's full range. Price Group: 1.
7. Finish: Gloss.
8. Grout Color: As selected from manufacturer's full range of colors.
9. Installation Pattern: Infill only, match existing

2.2 PRIMER

A. Multipurpose Bond-Promoting Primer: Low-VOC, synthetic resin-based primer with bond-promoting silica aggregates suspended in a dispersion, for interior and exterior applications.

1. Basis of Design:

a. MAPEI Corporation: ECO Prim Grip.

2. Approved Manufacturers: Subject to compliance with requirement.

a. Laticrete International, Inc.
b. Custom Building Products.

2.3 PATCHING AND SKIMCOATING COMPOUND

A. Cementitious patching and skimcoating compound.

1. Basis of Design:

a. MAPEI Corporation: Provide one of the following:

1) Mapecem Quickpatch.
2) Planiprep PSC.

2. Approved Manufacturers: Subject to compliance with requirement.

a. Laticrete International, Inc.
b. Custom Building Products

2.4 WATERPROOF/CRACK ISOLATION MEMBRANE

A. General: Manufacturer's standard product, selected from the following, which complies with ANSI A118.10 and ANSI A118.12 is recommended by the manufacturer for the application indicated. Include reinforcement and accessories recommended by manufacturer.

1. Basis of Design:

a. MAPEI Corporation: Mapelastic AquaDefense.

2. Approved Manufacturers: Subject to compliance with requirements.

a. Laticrete International, Inc.: Hydroban.
b. Custom Building Products: RedGuard Waterproofing and Crack Prevention Membrane.

2.5 SETTING MATERIALS

A. Improved Modified Dry-Set Cement Mortar (Thin Set): ANSI A 118.4, HET, ANSI A118.11 and ANSI A118.15 HET.

1. Basis of Design:

a. MAPEI Corporation: Provide one of the following:

1) Ultraflex LFT
2) Keraflex Super
3) Granirapid System

2. Approved Manufacturers: Subject to compliance with requirement.

a. Laticrete International, Inc.
b. Custom Building Products

3. Provide prepackaged, dry-mortar mix containing dry, redispersible, vinyl acetate or acrylic additive to which only water must be added at Project site.
4. Provide prepackaged, dry-mortar mix combined with acrylic resin or styrene-butadiene-rubber liquid-latex additive at Project site.

B. Large and Heavy Tile Mortar, Modified Dry-Set Mortar ("H" as rated by ANSI): Comply with requirements in ANSI A118.4H. Provide product that is approved by manufacturer for application thickness up to 1/2 inch.

1. Provide prepackaged, dry-mortar mix containing dry, redispersible, vinyl acetate or acrylic additive to which only water must be added at Project site.
2. Provide prepackaged, dry-mortar mix combined with acrylic resin or styrene-butadiene-rubber liquid-latex additive at Project site.
3. For wall applications, provide mortar that complies with requirements for nonsagging mortar in addition to the other requirements in ANSI A118.4HT.

4. Basis of Design:

a. MAPEI Corporation: Provide one of the following:

1) Ultralite S2
2) Ultrabond ECO GPT
3) Granirapid System

5. Approved Manufacturers: Subject to compliance with requirement.

a. Laticrete International, Inc.
b. Custom Building Products

2.6 GROUT MATERIALS

A. Polymer-Modified Tile Grout: Polymer Type: Ethylene vinyl acetate or acrylic additive, in dry, redispersible form, prepackaged with other dry ingredients. Comply with requirements in ANSI A118.7.

1. Basis of Design:

a. MAPEI Corporation: Ultracolor Plus FA

2. Approved Manufacturers: Subject to compliance with requirement.

    a. Laticrete International, Inc.
    b. Custom Building Products

2.7 ELASTOMERIC SEALANTS

A. General: Provide sealants, primers, backer rods, and other sealant accessories that comply with the following requirements and with the applicable requirements in Division 7 Section "Joint Sealants."

1. Sealants shall have a VOC content of 250 g/L or less when calculated according to 40 CFR 59, Subpart D (EPA Method 24).
2. Sealants shall comply with the testing and product requirements of the California Department of Health Services' "Standard Practice for the Testing of Volatile Organic Emissions from Various Sources Using Small-Scale Environmental Chambers."
3. Use primers, backer rods, and sealant accessories recommended by sealant manufacturer.

4. Basis of Design:

    a. MAPEI Corporation: Mapesil T Plus.

5. Approved Manufacturers: Subject to compliance with requirement.

    a. Laticrete International, Inc.
    b. Custom Building Products

B. Colors: Provide colors of exposed sealants to match colors of grout in tile adjoining sealed joints unless otherwise indicated.

2.8 MISCELLANEOUS MATERIALS

A. Trowelable Floor/Wall Patch and Render Mortar: Quick-setting, polymer-modified, fiber-reinforced, cementitious rendering, patching, ramping and leveling mortar. Can be applied from 1/8 inch to 1-1/4 inches (3 mm to 3.2 cm).

1. Basis of Design:

    a. MAPEI Corporation: Planitop 330 Fast.

2. Approved Manufacturers: Subject to compliance with requirement.

    a. Laticrete International, Inc.
    b. Custom Building Products.

B. Cement Grout Haze Remover: Professional-strength, water-based formulation that helps remove cement grout haze from tile, concrete and acid-resistant natural-stone surfaces; acidic, low-odor, and nonflammable.

1. Basis of Design:

    a. MAPEI Corporation: UltraCare Cement Grout Haze Remover

2. Approved Manufacturers: Subject to compliance with requirement.

    a. Laticrete International, Inc.
    b. Custom Building Products.

C. Metal Edge Strips: Angle or L-shaped, height to match tile and setting-bed thickness, metallic or combination of metal and PVC or neoprene base, designed specifically for flooring and wall applications.

D. Water-Based Penetrating Grout Sealer: Provides protection against staining for use with sanded and unsanded cementitious grout joints. Can also be used as a pre-grouting sealer.

1. Basis of Design:

    a. MAPEI Corporation: UltraCare Grout Sealer.

2. Approved Manufacturers: Subject to compliance with requirement.

    a. Laticrete International, Inc.
    b. Custom Building Products.

2.9 MIXING MORTARS AND GROUT

A. Mix mortars and grouts to comply with referenced standards and mortar and grout manufacturers' written instructions.

B. Add materials, water, and additives in accurate proportions.

C. Obtain and use type of mixing equipment, mixer speeds, mixing containers, mixing time, and other procedures to produce mortars and grouts of uniform quality with optimum performance characteristics for installations indicated.

PART 3 - EXECUTION

3.1 EXAMINATION

A. Examine substrates, areas, and conditions where tile will be installed, with Installer present, for compliance with requirements for installation tolerances and other conditions affecting performance of installed tile.

1. Verify that substrates for setting tile are firm, dry, clean, free of coatings that are incompatible with tile-setting materials including curing compounds and other substances that contain soap, wax, oil, or silicone; and comply with flatness tolerances required by ANSI A 108.01 for installations indicated.

2. Verify that installation of grounds, anchors, recessed frames, electrical and mechanical units of work, and similar items located in or behind tile has been completed.
3. Verify that joints and cracks in tile substrates are coordinated with tile joint locations; if not coordinated, adjust joint locations in consultation with Architect.

B. Proceed with installation only after unsatisfactory conditions have been corrected.

3.2 PREPARATION

A. Where indicated, prepare substrates to receive waterproofing by applying a reinforced mortar bed that complies with ANSI A 108.1A/108.1B and is sloped 1/4 inch per foot toward drains.

B. Blending: For tile exhibiting color variations, verify that tile has been factory blended and packaged so tile units taken from one package show same range of colors as those taken from other packages and match approved Samples. If not factory blended, either return to manufacturer or blend tiles at Project site before installing.

3.3 TILE INSTALLATION

A. Comply with TCNA's "Handbook for Ceramic Tile Installation" for TCNA installation methods specified in tile installation schedules. Comply with parts of the ANSI A 108 Series "Specifications for Installation of Ceramic Tile" that are referenced in TCNA installation methods, specified in tile installation schedules, and apply to types of setting and grouting materials used.

1. For the following installations, follow procedures in the ANSI A108 Series of Tile Installation Standards for providing 95 percent mortar coverage:

a. Tile composed of tiles 8 by 8 inches or larger.

B. Extend tile work into recesses and under or behind equipment and fixtures to form complete covering without interruptions unless otherwise indicated. Terminate work neatly at obstructions, edges, and corners without disrupting pattern or joint alignments.

C. Accurately form intersections and returns. Perform cutting and drilling of tile without marring visible surfaces. Carefully grind cut edges of tile abutting trim, finish, or built-in items for straight aligned joints. Fit tile closely to electrical outlets, piping, fixtures, and other penetrations so plates, collars, or covers overlap tile.

D. Provide manufacturer's standard trim shapes where necessary to eliminate exposed tile edges.

E. Jointing Pattern: Lay tile in grid pattern unless otherwise indicated. Lay out tile work and center tile fields in both directions in each space or on each wall area. Lay out tile work to minimize the use of pieces that are less than half of a tile. Provide uniform joint widths unless otherwise indicated.

1. For tile mounted in sheets, make joints between tile sheets same width as joints within tile sheets so joints between sheets are not apparent in finished work.

F. Joint Widths: Unless otherwise indicated, install tile with the following joint widths:

1. Unglazed porcelain mosaic tile (PT3): 1/8-inch.
2. Glazed Ceramic Wall Tile (PT1/PT4): 1/16-inch.
3. Porcelain Wall Tile (PT2): 1/8-inch.

G. Lay out tile wainscots to dimensions indicated or to next full tile beyond dimensions indicated.

H. Expansion Joints: Comply with TCNA indications for type of installation and comply with their written recommendations for expansion joints for wall and floor applications. Provide expansion joints and other sealant-filled joints, including control, contraction, and isolation joints, where indicated. Form joints during installation of setting materials, mortar beds, and tile. Do not saw-cut joints after installing tiles.

1. Where joints occur in concrete substrates, locate joints in tile surfaces directly above them.
2. Prepare joints and apply sealants to comply with requirements in Division 7 Section "Joint Sealants."

I. Metal Edge Strips: Provide strips equal to Schluter System for transitions from tile to adjacent materials on floors, for wall transitions and corner applications. Refer to Drawings for details, and the following:

1. Outside Corner Trim: Schluter Systems, “Quadec”, Finish: Satin anodized aluminum.
2. Wainscot Top Trim: Schluter Systems, “Schiene”, Finish: Satin anodized aluminum.
3. Outside Edge Trim: Schluter Systems “Schiene”, Finish: Satin anodized aluminum.
4. Outside Corners (PT2): Schluter Systems, “FINEC-SQ”, Finish: Greige.
5. Exposed Top Edge (PT2): Schluter Systems, “FINEC-SQ”, Finish: Greige.

J. Grout Sealer: Apply grout sealer to cementitious grout joints in tile floors according to grout sealer manufacturer's written instructions. As soon as grout sealer has penetrated grout joints, remove excess sealer and sealer from tile faces by wiping with soft cloth.

3.4 WATERPROOFING INSTALLATION

A. Install waterproofing to comply with ANSI A 118.10, ANSI A108.13 and manufacturer's written instructions to produce waterproof membrane of uniform thickness and bonded securely to substrate.

B. Do not install tile or setting materials over waterproofing until waterproofing has cured and been tested to determine that it is watertight.

3.5 CLEANING AND PROTECTING

A. Cleaning: On completion of placement and grouting, clean all ceramic tile surfaces so they are free of foreign matter.

1. Remove latex-Portland cement grout residue from tile as soon as possible.
2. Clean grout smears and haze from tile according to tile and grout manufacturer's written instructions but no sooner than 10 days after installation. Use only cleaners recommended by tile and grout manufacturers and only after determining that cleaners are safe to use by testing on samples of tile and other surfaces to be cleaned. Protect metal surfaces and plumbing fixtures from effects of cleaning. Flush surfaces with clean water before and after cleaning.

B. Protection: Protect installed tile work with kraft paper or other heavy covering during construction period to prevent staining, damage, and wear. If recommended by tile manufacturer, apply coat of neutral protective cleaner to completed tile walls and floors.

1. Before final inspection, remove protective coverings and rinse neutral protective cleaner from tile surfaces.

3.6 INTERIOR TILE INSTALLATION SCHEDULE

A. Interior Wall Installations:

1. Tile Installation W202I-23: Thin-set mortar over CMU units in accordance with ANSI A108.5. For Restroom applications, apply waterproof membrane in accordance with ANSI A118.10.

   a. Tile Type: PT3/PT4.
   b. Mortar: Improved Modified Dry-Set Cement Mortar, Thin-Set bed, modified dry-set mortar.
   c. Grout: High-Performance Cement Grout that meets or exceeds ANSI A118.7.

2. Tile Installation W202I-23: Medium-set mortar over CMU units in accordance with ANSI A108.5. For Restroom applications, apply waterproof membrane in accordance with ANSI A118.10.

   a. Tile Type: PT1/PT2.
   b. Mortar: Improved Modified Dry-Set Cement Mortar, Non-Sag, for Large and Heavy Tile LHT/Medium-bed, modified dry-set mortar.
   c. Grout: High-Performance Cement Grout that meets or exceeds ANSI A118.7.

3. Tile Installation W245-23: Thin-set mortar on backer units in accordance with ANSI A108.5 and A108.11. Restroom applications, apply waterproof membrane in accordance with ANSI A118.10.

   a. Tile Type: PT3/PT4.
   b. Mortar: Improved Modified Dry-Set Cement Mortar, Thin-Set bed, modified dry-set mortar.
   c. Grout: High-Performance Cement Grout that meets or exceeds ANSI A118.7.

4. Tile Installation W245-23: Medium-set mortar on backer units in accordance with ANSI A108.5 and A108.11. Restroom applications, apply waterproof membrane in accordance with ANSI A118.10.

a. Tile Type: PT1/PT2.
b. Mortar: Improved Modified Dry-Set Cement Mortar, Non-Sag, for Large and Heavy Tile LHT/Medium-bed, modified dry-set mortar.
c. Grout: High-Performance Cement Grout that meets or exceeds ANSI A118.7.

5. Tile Installation B422-23: Medium-set mortar on waterproof membrane with integrated bonding flange for bonded membranes; Shower applications.

a. Tile Type: PT1.
b. Mortar: Improved Modified Dry-Set Cement Mortar, Non-Sag, for Large and Heavy Tile LHT/Medium-bed, modified dry-set mortar.
c. Grout: High-Performance Cement Grout that meets or exceeds ANSI A118.7.

END OF SECTION 093000

SECTION 095113 - ACOUSTICAL PANEL CEILINGS

PART 1 - GENERAL

1.1 RELATED DOCUMENTS

A. Drawings and general provisions of the Contract, including General and Supplementary Conditions and Division 01 Specification Sections, apply to this Section.

1.2 SUMMARY

A. Section Includes:

1. Mineral-based, factory-painted acoustical ceiling panels.
2. Fiberglass-reinforced plastic (FRP) clad ceiling panels.
3. Standard and specialty exposed grid suspension systems.

B. Related Sections:

1. Division 9 Section “Metal Suspension Gypsum Board Ceiling System” for adjacent gypsum board ceiling grid system.

1.3 PREINSTALLATION MEETINGS

A. Preinstallation Conference: Conduct conference at Project site.

1.4 ACTION SUBMITTALS

A. Product Data: For each type of product.

1.5 INFORMATIONAL SUBMITTALS

A. Coordination Drawings: Reflected ceiling plans, drawn to scale, on which the following items are shown and coordinated with each other, using input from installers of the items involved:

1. Suspended ceiling components.
2. Structural members to which suspension systems will be attached.
3. Size and location of initial access modules for acoustical panels.
4. Items penetrating finished ceiling including, but not limited to, the following:

a. Lighting fixtures.
b. Air outlets and inlets.
c. Speakers.
d. Sprinklers.
e. Access panels.

5. Perimeter moldings.

B. Qualification Data: For testing agency.

C. Product Test Reports: For each acoustical panel ceiling, for tests performed by a qualified testing agency.

D. Evaluation Reports: For each acoustical panel ceiling suspension system and anchor and fastener type, from ICC-ES.

E. Field quality-control reports.

F. Samples for Initial Selection: Contractor shall provide manufacturer's color PDF images of acoustical ceiling panels and suspension system for review & approval. Actual samples are NOT required unless specifically requested by the architect/interior designer.

1.6 CLOSEOUT SUBMITTALS

A. Maintenance Data: For finishes to include in maintenance manuals.

1.7 MAINTENANCE MATERIAL SUBMITTALS

A. Furnish extra materials that match products installed and that are packaged with protective covering for storage and identified with labels describing contents.

1. Acoustical Panels: Full-size panels equal to 2 percent of quantity installed, in each pattern and color provided.
2. Suspension-System Components: Quantity of each exposed component equal 2 percent of quantity installed, in each color and style provided.

1.8 QUALITY ASSURANCE

A. Testing Agency Qualifications: Qualified according to NVLAP for testing indicated.

1.9 DELIVERY, STORAGE, AND HANDLING

A. Deliver acoustical panels, suspension-system components, and accessories to Project site in original, unopened packages and store them in a fully enclosed, conditioned space where they will be protected against damage from moisture, humidity, temperature extremes, direct sunlight, surface contamination, and other causes.

B. Before installing acoustical panels, permit them to reach room temperature and stabilized moisture content.

C. Handle acoustical panels carefully to avoid chipping edges or damaging units in any way.

1.10 FIELD CONDITIONS

A. Environmental Limitations: Do not install acoustical panel or FRP ceilings until spaces are enclosed and weatherproof, wet work in spaces is complete and dry, work above ceilings is complete, and ambient temperature and humidity conditions are maintained at the levels indicated for Project when occupied for its intended use.

PART 2 - PRODUCTS

2.1 PERFORMANCE REQUIREMENTS

A. Seismic Performance: Acoustical ceiling shall withstand the effects of earthquake motions determined according to ASCE/SEI 7.

B. Surface-Burning Characteristics: Comply with ASTM E 84; testing by a qualified testing agency. Identify products with appropriate markings of applicable testing agency.

1. Flame-Spread Index: Comply with ASTM E 1264 for Class A materials.
2. Smoke-Developed Index: 50 or less.

C. Fire-Resistance Ratings: Comply with ASTM E 119; testing by a qualified testing agency. Identify products with appropriate markings of applicable testing agency.

1. Indicate design designations from UL's "Fire Resistance Directory" or from the listings of another qualified testing agency.

2.2 ACOUSTICAL PANELS, GENERAL

A. Low-Emitting Materials: Acoustical panel ceilings shall comply with the testing and product requirements of the California Department of Health Services' "Standard Practice for the Testing of Volatile Organic Emissions from Various Sources Using Small-Scale Environmental Chambers."

B. Source Limitations: Obtain each type of acoustical ceiling panel and supporting suspension system from single source from single manufacturer.

C. Acoustical Panel Standard: Provide manufacturer's standard panels of configuration indicated that comply with ASTM E 1264 classifications as designated by types, patterns, acoustical ratings, and light reflectance unless otherwise indicated.

D. Acoustical Panel Colors and Patterns: Match appearance characteristics indicated for each product type.

1. Where appearance characteristics of acoustical panels are indicated by referencing pattern designations in ASTM E 1264 and not manufacturers' proprietary product designations, provide products selected by Architect from each manufacturer's full range that comply with requirements indicated for type, pattern, color, light reflectance, acoustical performance, edge detail, and size.

2.3 ACOUSTICAL PANELS – TYPE (ACT1)

A. Manufacturers and Products: Subject to compliance with requirements, available manufacturers offering products that may be incorporated into the Work include the following:

1. Basic of Design:

a. Armstrong World Industries, Inc.; Fine Fissured High Acoustics No. 1714.

2. Approved Manufacturers:

a. USG Interiors, Inc.; Radar ClimaPlus High-NRC, No. 22441.
b. CertainTeed, Saint-Gobain; Fine Fissured, No. HHF-497 HNRCX.

B. Classification: Provide panels complying with ASTM E 1264 for type, form, and pattern as follows:

1. Type and Form: Type III, mineral base with painted finish.
2. Color: White.
3. LR: 0.82.
4. NRC: Not less than 0.70.
5. CAC: Not less than 40.
6. Edge Detail: Square.
7. Thickness: 3/4 inch.
8. Modular Size: Nominal 24 inches by 48 inches.

C. Broad Spectrum Antimicrobial Fungicide and Bactericide Treatment: Provide acoustical panels treated with manufacturer's standard antimicrobial formulation that inhibits fungus, mold, mildew, and gram-positive and gram-negative bacteria and showing no mold, mildew, or bacterial growth when tested according to ASTM D 3273 and evaluated according to ASTM D 3274 or ASTM G 21.

D. Suspension System Type: Applications and types as indicated on Drawings and Paragraph 2.8.B.

2.4 ACOUSTICAL PANELS – TYPE (ACT2)

A. Manufacturers and Products: Subject to compliance with requirements, available manufacturers offering products that may be incorporated into the Work include the following:

1. Basis of Design:

a. Armstrong World Industries, Inc.; Cirrus, No. 535.

2. Approved Manufacturers:

a. USG Interiors, Inc.; Eclipse, No. 78775.
b. CertainTeed, Saint-Gobain: Cashmere High NRC, No. CM-494NRC.

B. Classification: Provide panels complying with ASTM E 1264 for type, form, and pattern as follows:
1. Type and Form: Type III, mineral base with painted finish.
2. Color: White.
3. LR: 0.85.
4. NRC: Not less than .70.
5. CAC: .38
6. Edge Detail: Angled Tegular.
7. Thickness: 3/4-inches.
8. Modular Size: Nominal 24 inches by 48 inches.

C. Broad Spectrum Antimicrobial Fungicide and Bactericide Treatment: Provide acoustical panels treated with manufacturer's standard antimicrobial formulation that inhibits fungus, mold,

mildew, and gram-positive and gram-negative bacteria and showing no mold, mildew, or bacterial growth when tested according to ASTM D 3273 and evaluated according to ASTM D 3274 or ASTM G 21.

D. Suspension System Type: Applications and types as indicated on Drawings and Paragraph 2.8.B. and 2.10.A

2.5 ACOUSTICAL PANELS – TYPE (ACT3)

A. Manufacturers and Products: Subject to compliance with requirements, available manufacturers offering products that may be incorporated into the Work include the following:

1. Basis of Design:

a. Armstrong World Industries, Inc.; Cirrus, No. 584.

2. Approved Manufacturers:

a. USG Interiors, Inc.; Eclipse, No. 76775.
b. CertainTeed, Saint-Gobain; Cashmere High NRC, No. CM-454NRCP.

B. Classification: Provide panels complying with ASTM E 1264 for type, form, and pattern as follows:

1. Type and Form: Type III, mineral base with painted finish.
2. Color: White.
3. LR: 0.85.
4. NRC: Not less than 0.70.
5. CAC: Not less than 35.
6. Edge Detail: Angled Tegular.
7. Thickness: 3/4 inch.
8. Modular Size: Nominal 24 inches by 24 inches.

C. Broad Spectrum Antimicrobial Fungicide and Bactericide Treatment: Provide acoustical panels treated with manufacturer's standard antimicrobial formulation that inhibits fungus, mold, mildew, and gram-positive and gram-negative bacteria and showing no mold, mildew, or bacterial growth when tested according to ASTM D 3273 and evaluated according to ASTM D 3274 or ASTM G 21.

D. Suspension System Type: Applications and types as indicated on Drawings and Paragraph 2.8.B and 2.10.A.

2.6 FIBERGLASS REINFORCED PANELS – TYPE (FRP)

A. Manufactuers and Products: Subject to compliance with requirements, available manufacturers offering products that may be incorporated into the Work include the following:

1. Basis-of-Design:

a. Nudo, NuFiber, No. F9-FR-PPB625-MR-CT4 .090” 5/8” Fire-Rated Gypsum.

2. Approved Manufacturers:

a. Crane, Glasboard

B. Panel Characteristics: .090 Class A FRP laminated to 5/8” Fire-Rated and Moisture Resistant Gypsum Wallboard.

1. Texture: Pebbled
2. Color: 050 White.
3. Fire Rating: Class A
4. Thickness: .625 inch.
5. Modular Size: 24 inches by 48 inches.
6. Edge: Lay-In.

C. Installation: Use clear silicone sealant on top of flange with a nominal 1/8-inch bead to secure panel; 100-percent coverage on top of all flanges, including wall angle.

D. Warranty: Provide 10-year warranty for product installed.

E. Suspension System Type: Applications and types as indicated on Drawings and Paragraph 2.8.C.

2.7 METAL SUSPENSION SYSTEMS, GENERAL

A. Metal Suspension-System Standard: Provide manufacturer's standard direct-hung metal suspension systems of types, structural classifications, and finishes indicated that comply with applicable requirements in ASTM C 635.

1. High-Humidity Finish: Comply with ASTM C 635 requirements for "Coating Classification for Severe Environment Performance" where high-humidity finishes are indicated.

B. Wire Hangers, Braces, and Ties: Provide the following wire types, based on Project requirements:

1. Zinc-Coated, Carbon-Steel Wire: ASTM A 641, Class 1 zinc coating, soft temper.

a. Hanger wire shall be 12 gauge/.105 (Diameter Range: .105-.107); Carbon: C1006; Length: 12 feet; Tensile: 54/62,000 KSI; Breaking Load Minimum: 475 pounds; Breaking Load Maximum: 540 pounds; Safe Load Maximum: 275 pounds; Finish: Hot Dip Galvanized; Galvanize Coating: Class I, in accordance with ASTM-641/A.

2. Stainless-Steel Wire: ASTM A 580, Type 304, nonmagnetic.

a. 1/16” air craft cable shall have a minimum breaking strength of 275 pounds.

3. Nickel-Copper-Alloy Wire: ASTM B 164, nickel-copper-alloy UNS No. N04400.
4. Size: Select wire diameter so its stress at three times hanger design load (ASTM C 635/C, Table 1, "Direct Hung") will be less than yield stress of wire, but provide not less than 0.106-inch-diameter wire.

C. Hanger Rods: Mild steel, zinc coated or protected with rust-inhibitive paint.

D. Angle Hangers: Angles with legs not less than 7/8 inch wide; formed with 0.04-inch- thick, galvanized-steel sheet complying with ASTM A 653, G90 coating designation; with bolted connections and 5/16-inch diameter bolts.

E. Hold-Down Clips: Provide for all air lock and security applications, including vestibules, restrooms and locker rooms, where occurs; provide manufacturer's standard hold-down clips spaced 24 inches o.c. on all cross tees.

2.8 METAL SUSPENSION SYSTEM

A. Manufacturers and Products: Subject to compliance with requirements, available manufacturers offering products that may be incorporated into the Work include the following:

1. Basis of Design:

   a. Armstrong World Industries, Inc.

2. Approved Manufacturers:

   a. USG Interiors, Inc.
   b. CertainTeed, Saint-Gobain.

B. Wide-Face, Capped, Double-Web, Steel Suspension System: Main and cross runners roll formed from cold-rolled steel sheet; prepainted, electrolytically-zinc-coated, or hot-dip galvanized according to ASTM A 653, not less than G30 (Z90) coating designation; with prefinished 15/16-inch-wide metal caps on flanges.

1. Basis of Design: Equal to Armstrong, “Prelude”.
2. Structural Classification: Intermediate duty system.
3. End Condition of Cross Runners: Butt-edge type.
4. Face Design: Flat, flush.
5. Cap Material: Cold-rolled steel.
6. Cap Material @ moisture exposed areas (i.e. restrooms, shower etc): Aluminum cold rolled sheet.
7. Cap Finish: White.

C. Wide-Face, Capped, Double-Web, Steel Suspension System @ FRP: Main and cross runners roll formed from cold-rolled steel sheet; prepainted, electrolytically-zinc-coated, or hot- dip galvanized according to ASTM A 653, not less than G30 (Z90) coating designation; with prefinished 15/16-inch-wide metal caps on flanges.

1. Basis of Design: Equal to Armstrong, “Prelude XL”.
2. Structural Classification: Heavy duty system.
3. End Condition of Cross Runners: Butt-edge type.
4. Face Design: Flat, flush.
5. Cap Material: Cold rolled steel
6. Cap Material @ moisture exposed areas (i.e. restrooms, shower etc): Aluminum cold rolled sheel.
7. Cap Finish: White.

2.9 METAL EDGE MOLDINGS AND TRIM

A. Manufacturers and Products: Subject to compliance with requirements, available manufacturers offering products that may be incorporated into the Work include the following:

1. Basis of Design:

    a. Armstrong World Industries, Inc.

2. Approved Manufacturers:

    a. USG Interiors, Inc.
    b. CertainTeed, Saint-Gobain.

B. Extruded-Aluminum Edge Moldings and Trim: Where indicated, provide manufacturer's extruded-aluminum edge moldings and trim of profile indicated or referenced by manufacturer's designations, including splice plates, corner pieces, and attachment and other clips, complying with seismic design requirements and the following:

1. Aluminum Alloy: Alloy and temper recommended by aluminum producer and finisher for type of use and finish indicated, and with not less than the strength and durability properties of aluminum extrusions complying with ASTM B 221 for Alloy and Temper 6063-T5.
2. Baked-Enamel or Powder-Coat Finish: Minimum dry film thickness of 1.5 mils. Comply with ASTM C 635 and coating manufacturer's written instructions for cleaning, conversion coating, and applying and baking finish.

2.10 SPECIALTY SUSPENSION TRIM SYSTEM

A. Ceiling Clouds: Perimeter cloud trim for ceiling panels; refer to Drawings for extents and locations.

1. Manufacturers and Products: Subject to compliance with requirements, available manufacturers offering products that may be incorporated into the Work include the following:

    a. Basis of Design:

        1) Armstrong World Industries, Inc.; Axiom Classic.

    b. Approved Manufacturers:

        1) USG Interiors, Inc.; Compasso Elite.
        2) CertainTeed, Saint-Gobain; Cloud Perimeter Trim.

2. Trim Height: 6-inches high at clouds. Refer to drawings for additional Axiom trim heights.
3. Color: White.
4. Trim and Corners: Trim shall be equal to Armstrong World Industries, Inc. “Axiom Classic Trim,” with field-assembled corners.

PART 3 - EXECUTION

3.1 EXAMINATION

A. Examine substrates, areas, and conditions, including structural framing to which acoustical panel ceilings attach or abut, with Installer present, for compliance with requirements specified in this and other Sections that affect ceiling installation and anchorage and with requirements for installation tolerances and other conditions affecting performance of acoustical panel ceilings.

B. Examine acoustical panels before installation. Reject acoustical panels that are wet, moisture damaged, or mold damaged.

C. Proceed with installation only after unsatisfactory conditions have been corrected.

3.2 PREPARATION

A. Measure each ceiling area and establish layout of acoustical panels to balance border widths at opposite edges of each ceiling. Avoid using less-than-half-width panels at borders, and comply with layout shown on reflected ceiling plans.

3.3 INSTALLATION

A. General: Install acoustical panel ceilings to comply with ASTM C 636 and seismic design requirements indicated, according to manufacturer's written instructions and CISCA's "Ceiling Systems Handbook."

1. Fire-Rated Assembly: If indicated, install fire-rated ceiling systems according to tested fire-rated design.

B. Suspend ceiling hangers from building's structural members and as follows:

1. Install hangers plumb and free from contact with insulation or other objects within ceiling plenum that are not part of supporting structure or of ceiling suspension system.
2. Splay hangers only where required and, if permitted with fire-resistance-rated ceilings, to miss obstructions; offset resulting horizontal forces by bracing, counter-splaying, or other equally effective means.
3. Where width of ducts and other construction within ceiling plenum produces hanger spacings that interfere with location of hangers at spacings required to support standard suspension-system members, install supplemental suspension members and hangers in form of trapezes or equivalent devices.
4. Secure wire hangers to ceiling-suspension members and to supports above with a minimum of three tight turns. Connect hangers directly either to structures or to inserts, eye screws, or other devices that are secure and appropriate for substrate and that will not deteriorate or otherwise fail due to age, corrosion, or elevated temperatures.
5. Secure flat, angle, channel, and rod hangers to structure, including intermediate framing members, by attaching to inserts, eye screws, or other devices that are secure and appropriate for both the structure to which hangers are attached and the type of hanger involved. Install hangers in a manner that will not cause them to deteriorate or fail due to age, corrosion, or elevated temperatures.

6. Do not support ceilings directly from permanent metal forms or floor deck. Fasten hangers to cast-in-place hanger inserts, post-installed mechanical or adhesive anchors, or power-actuated fasteners that extend through forms into concrete.
7. When steel framing does not permit installation of hanger wires at spacing required, install carrying channels or other supplemental support for attachment of hanger wires.
8. Do not attach hangers to steel deck tabs or any other part of steel deck. Attach hangers to structural members only.
9. Space hangers not more than 48 inches o.c. along each member supported directly from hangers unless otherwise indicated; provide hangers not more than 8 inches from ends of each member.
10. Size supplemental suspension members and hangers to support ceiling loads within performance limits established by referenced standards and publications.

C. Ceiling Clouds: For ceiling clouds and similar conditions, all suspension shall be aircraft cable. Hanger wire will not be accepted. Cables and other suspension components shall be installed as inconspicuously as possible, using minimum quantity of components and at the greatest distance from the perimeter as possible. Aircraft cable shall be straight and free from kinks and black in color. Paint all other suspension members to match color of painted systems and equipment above ceiling plane.

1. Architect shall reject Work not meeting the aesthetic and performance requirements, in which the Installer shall reinstall unsatisfactory components.

D. Secure bracing wires to ceiling suspension members and to supports with a minimum of four tight turns. Suspend bracing from building's structural members as required for hangers, without attaching to permanent metal forms, steel deck, or steel deck tabs. Fasten bracing wires into concrete with cast-in-place or post-installed anchors.

E. Install edge moldings and trim of type indicated at perimeter of acoustical ceiling area and where necessary to conceal edges of acoustical panels.

1. Apply acoustical sealant in a continuous ribbon concealed on back of vertical legs of moldings before they are installed.
2. Screw attach moldings to substrate at intervals not more than 16 inches o.c. and not more than 3 inches from ends, leveling with ceiling suspension system to a tolerance of 1/8 inch in 12 feet. Miter corners accurately and connect securely.
3. Do not use exposed fasteners, including pop rivets, on moldings and trim.

F. Install suspension-system runners so they are square and securely interlocked with one another. Remove and replace dented, bent, or kinked members.

G. Install acoustical panels with undamaged edges and fit accurately into suspension-system runners and edge moldings. Scribe and cut panels at borders and penetrations to provide a neat, precise fit.

1. Arrange directionally patterned acoustical panels as indicated on Drawings.
2. For square-edged panels, install panels with edges fully hidden from view by flanges of suspension-system runners and moldings.
3. For reveal-edged panels on suspension-system runners, install panels with bottom of reveal in firm contact with top surface of runner flanges.

4. For reveal-edged panels on suspension-system members with box-shaped flanges, install panels with reveal surfaces in firm contact with suspension-system surfaces and panel faces flush with bottom face of runners.
5. Paint cut edges of panel remaining exposed after installation; precisely match color of exposed panel surfaces using coating furnished or recommended in writing for this purpose by acoustical panel manufacturer.
6. Install hold-down clips for all air lock applications, including vestibules, and in areas required by authorities having jurisdiction, and for fire-resistance ratings; space as recommended by panel manufacturer's written instructions unless otherwise indicated.
7. Protect lighting fixtures and air ducts to comply with requirements indicated for fire-resistance-rated assembly.

3.4 CLEANING

A. Clean exposed surfaces of acoustical panel ceilings, including trim, edge moldings, and suspension-system members. Comply with manufacturer's written instructions for cleaning and touchup of minor finish damage. Remove and replace ceiling components that cannot be successfully cleaned and repaired to permanently eliminate evidence of damage.

END OF SECTION 095113

SECTION 096513 - RESILIENT BASE AND ACCESSORIES

PART 1 - GENERAL

1.1 RELATED DOCUMENTS

A. Drawings and general provisions of the Contract, including General and Supplementary Conditions and Division 01 Specification Sections, apply to this Section.

1.2 SUMMARY

A. Section Includes:

1. Thermoplastic-rubber base.
2. Rubber molding accessories.
3. Rubber Stair Treads and Risers.

1.3 ACTION SUBMITTAL

A. Product Data: For each type of product.

B. Samples for Initial Selection: Contractor shall provide manufacturer's color PDF images of rubber base, accessories, stair treads, risers and landings for review & approval. Actual samples are NOT required unless specifically requested by the architect/interior designer.

C. Product Schedule: For resilient base and accessory products. Use same designations indicated on Drawings.

1.4 MAINTENANCE MATERIAL SUBMITTALS

A. Furnish extra materials that match products installed and that are packaged with protective covering for storage and identified with labels describing contents.

1. Furnish not less than 10 linear feet for every 500 linear feet or fraction thereof, of each type, color, pattern, and size of resilient product installed.

1.5 QUALITY ASSURANCE

A. Mockups: Build mockups to verify selections made under Sample submittals and to demonstrate aesthetic effects and set quality standards for materials and execution.

1. Coordinate mockups in this Section with mockups specified in other Sections.

2. Approval of mockups does not constitute approval of deviations from the Contract Documents contained in mockups unless Architect specifically approves such deviations in writing.

3. Subject to compliance with requirements, approved mockups may become part of the completed Work if undisturbed at time of Substantial Completion.

1.6 DELIVERY, STORAGE, AND HANDLING

A. Store resilient products and installation materials in dry spaces protected from the weather, with ambient temperatures maintained within range recommended by manufacturer, but not less than 50 deg F or more than 90 deg F.

1.7 FIELD CONDITIONS

A. Maintain ambient temperatures within range recommended by manufacturer, but not less than 70 deg F or more than 95 deg F in spaces to receive resilient products during the following time periods:

1. 48 hours before installation.
2. During installation.
3. 48 hours after installation.

B. After installation and until Substantial Completion, maintain ambient temperatures within range recommended by manufacturer, but not less than 55 deg F or more than 95 deg F.

C. Install resilient products after other finishing operations, including painting, have been completed.

PART 2 - PRODUCTS

2.1 PERFORMANCE REQUIREMENTS

A. FloorScore Compliance: Resilient base and stair accessories shall comply with requirements of FloorScore certification.

B. Low-Emitting Materials: Flooring system shall comply with the testing and product requirements of the California Department of Public Health's "Standard Method for the Testing and Evaluation of Volatile Organic Chemical Emissions from Indoor Sources Using Environmental Chambers."

2.2 MANUFACTURERS

A. Acceptable Manufacturers: Subject to compliance with requirements, the following manufacturers' products may be incorporated into the Work:

1. Basis of Design:

a. Tarkett – Johnsonite.

2. Approved Manufacturers:

a. Roppe Corporation, USA.

2.3 THERMOPLASTIC-RUBBER BASE (RB)

A. Product Standard: ASTM F1861, Type TP (rubber, thermoplastic).

1. Group: 1 (solid, homogeneous)

B. Style: B, Cove with top-set toe.
C. Thickness: 0.125 inch.
D. Height: Provide 4-inch-high at casework toe kick and 6-inch-high base in all other areas indicated.
E. Lengths: Coils in manufacturer's standard length but not less than 96 feet.
F. Outside Corners: Job-formed.
G. Inside Corners: Job-formed.
H. Surface: Smooth.
I. Colors: As selected by Architect from manufacturer's full range of colors and patterns produced for vinyl wall base complying with requirements indicated.

1. Provide a minimum of (90) color selections.

2.4 RUBBER MOLDING ACCESSORY

A. Description: Rubber nosing, cove caps, edging, reducers, joiners and transition strips.
B. Profile and Dimensions: As indicated on drawings.
C. Locations: Provide rubber molding accessories in areas indicated below:

1. Transition Strips, Reducers and Adaptors.

D. Colors and Patterns: As selected by Architect from manufacturer's full range of colors.

1. Provide a minimum of (36) color selections.

2.5 RUBBER STAIR ACCESSORIES (RBR)

A. Fire-Test-Response Characteristics: As determined by testing identical products according to ASTM E 648 or NFPA 253 by a qualified testing agency.

1. Critical Radiant Flux Classification: Class I, not less than 0.45 W/sq. cm.

B. Rubber Treads: ASTM F 2169.

1. Type: TP (rubber, thermoplastic).
2. Class: 2 (with contrasting grit tap for the visually impaired).
3. Pattern; Hammered (HTR) surface design, No. VIHMT.
4. Nosing Style: Square, adjustable to cover angles between 60 and 90 degrees.
5. Nosing Height: 2 inches.
6. Thickness: 0.125-inch and tapered to back edge.
7. Size: Lengths and depths to fit each stair tread in one piece.

8. Integral Risers: Smooth, flat: in height that fully covers substrate.

a. Provide at all locations unless noted otherwise.

C. Landing Tile (RBR): Matching treads; produced by same manufacturer as treads and recommended by manufacturer for installation with treads.

D. Locations: Provide rubber stair accessories in areas indicated.

E. Colors and Patterns: As selected by Architect from manufacturer's full range of colors.

1. Provide a minimum of (107) color selections.

2.6 INSTALLATION MATERIALS

A. Trowelable Leveling and Patching Compounds: Latex-modified, Portland cement-based or blended hydraulic-cement-based formulation provided or approved by resilient product manufacturer for applications indicated.

B. Adhesives: Water-resistant type recommended by resilient-product manufacturer for resilient products and substrate conditions indicated.

1. Adhesives shall have a VOC content of 50 g/L or less
2. Adhesives shall comply with the testing and product requirements of the California Department of Public Health's "Standard Method for the Testing and Evaluation of Volatile Organic Chemical Emissions from Indoor Sources Using Environmental Chambers."
3. Provide adhesive for the following substrates:

a. Porous Substrates: 960 Cove Base Adhesive.
b. Non-Porous Substrates and All Outside Corners: 946 Premium Contact Adhesive.

C. Stair-Tread Nose Filler: Two-part epoxy compound recommended by resilient stair-tread manufacturer to fill nosing substrates that do not conform to tread contours.

PART 3 - EXECUTION

3.1 EXAMINATION

A. Examine substrates, with Installer present, for compliance with requirements for maximum moisture content and other conditions affecting performance of the Work.

1. Verify that finishes of substrates comply with tolerances and other requirements specified in other Sections and that substrates are free of cracks, ridges, depressions, scale, and foreign deposits that might interfere with adhesion of resilient products.

B. Proceed with installation only after unsatisfactory conditions have been corrected.

1. Installation of resilient products indicates acceptance of surfaces and conditions.

3.2 PREPARATION

A. Prepare substrates according to manufacturer's written instructions to ensure adhesion of resilient products.

B. Concrete Substrates for Resilient Stair Accessories: Prepare horizontal surfaces according to ASTM F 710.

1. Verify that substrates are dry and free of curing compounds, sealers, and hardeners.
2. Remove substrate coatings and other substances that are incompatible with adhesives and that contain soap, wax, oil, or silicone, using mechanical methods recommended by manufacturer. Do not use solvents.
3. Alkalinity and Adhesion Testing: Perform tests recommended by manufacturer. Proceed with installation only after substrate alkalinity falls within range on pH scale recommended by manufacturer in writing, but not less than 5 or more than 9pH.
4. Moisture Testing: Proceed with installation only after substrates pass testing according to manufacturer's written recommendations, but not less stringent than the following:

    a. Perform anhydrous calcium chloride test according to ASTM F 1869. Proceed with installation only after substrates have maximum moisture-vapor-emission rate of 3 lb of water/1000 sq. ft. in 24 hours.
    b. Perform relative humidity test using in situ probes according to ASTM F 2170. Proceed with installation only after substrates have maximum 75 percent relative humidity level.

C. Fill cracks, holes, and depressions in substrates with trowelable leveling and patching compound; remove bumps and ridges to produce a uniform and smooth substrate.

D. Do not install resilient products until they are the same temperature as the space where they are to be installed.

1. At least 48 hours in advance of installation, move resilient products and installation materials into spaces where they will be installed.

E. Immediately before installation, sweep and vacuum clean substrates to be covered by resilient products.

3.3 RESILIENT BASE INSTALLATION

A. Comply with manufacturer's written instructions for installing resilient base.

B. Apply resilient base to walls, columns, pilasters, casework and cabinets in toe spaces, and other permanent fixtures in rooms and areas where base is required.

C. Install resilient base in lengths as long as practical without gaps at seams and with tops of adjacent pieces aligned.

D. Tightly adhere resilient base to substrate throughout length of each piece, with base in continuous contact with horizontal and vertical substrates.

E. Do not stretch resilient base during installation.

F. On masonry surfaces or other similar irregular substrates, fill voids along top edge of resilient base with manufacturer's recommended adhesive filler material.

G. Preformed Corners: Install preformed corners before installing straight pieces.

H. Job-Formed Corners:

1. Outside Corners: Use straight pieces of maximum lengths possible and form with returns not less than 3 inches in length.

a. Form without producing discoloration (whitening) at bends.

2. Inside Corners: Use straight pieces of maximum lengths possible and form with returns not less than 3 inches in length.

a. Miter corners to minimize open joints.

3.4 RESILIENT ACCESSORY INSTALLATION

A. Comply with manufacturer's written instructions for installing resilient accessories.

B. Resilient Stair Accessories:

1. Use stair-tread-nose filler to fill nosing substrates that do not conform to tread contours.
2. Tightly adhere to substrates throughout length of each piece.
3. For treads installed as separate, equal-length units, install to produce a flush joint between units.

C. Resilient Molding Accessories: Butt to adjacent materials and tightly adhere to substrates throughout length of each piece. Install reducer strips at edges of floor covering that would otherwise be exposed.

3.5 CLEANING AND PROTECTION

A. Comply with manufacturer's written instructions for cleaning and protecting resilient products.

B. Perform the following operations immediately after completing resilient-product installation:

1. Remove adhesive and other blemishes from exposed surfaces.
2. Sweep and vacuum horizontal surfaces thoroughly.
3. Damp-mop horizontal surfaces to remove marks and soil.

C. Protect resilient products from mars, marks, indentations, and other damage from construction operations and placement of equipment and fixtures during remainder of construction period.

D. Cover resilient products subject to wear and foot traffic until Substantial Completion.

END OF SECTION 096513

SECTION 096519 - RESILIENT TILE FLOORING

PART 1 - GENERAL

1.1 RELATED DOCUMENTS

A. Drawings and general provisions of the Contract, including General and Supplementary Conditions and Division 01 Specification Sections, apply to this Section.

1.2 SUMMARY

A. Section Includes:

1. Quartz Composite Tile.
2. Rubber Floor Tile.

B. Related Requirements:

1. Division 3 Section “Cast-in-Place Concrete” for Moisture Vapor Reduction Admixture.
2. Division 3 Section “Hydraulic Cement Underlayment” for Self-Leveling Underlayment.
3. Division 9 Section “Resilient Base and Accessories” for resilient wall and accessories installed with resilient tile.

1.3 PREINSTALLATION MEETINGS

A. Preinstallation Conference: Conduct conference at Project site.

1. Attendees: The Installer and representatives as well as senior technician of manufacturers and fabricators involved in, or affected by the installation, and its coordination or integration with other materials and installations that have preceded or will follow, shall attend the meeting.

B. Review methods and procedures related to resilient flooring including, but not limited to, the following:

1. Inspect and discuss condition of substrate and other preparatory work performed by other trades.
2. Review and finalize construction schedule and verify availability of materials, Installer's personnel, equipment, and facilities needed to make progress and avoid delays.
3. Review special designs and patterns.

1.4 ACTION SUBMITTALS

A. Product Data: For each type of product.

B. Shop Drawings: For each type of floor tile. Include floor tile layouts, edges, columns, doorways, enclosing partitions, built-in furniture, cabinets, and cutouts.

1. Show details of special patterns.

C. Product Schedule: For floor tile. Use same designations indicated on Drawings.

D. Samples: Contractor shall provide manufacturer's color PDF images of resilient flooring for review & approval. Actual samples are NOT required unless specifically requested by the architect/interior designer.

1.5 INFORMATIONAL SUBMITTALS

A. Qualification Data: For Installer.

1.6 CLOSEOUT SUBMITTALS

A. Maintenance Data: For each type of floor tile to include in maintenance manuals.

1.7 MAINTENANCE MATERIAL SUBMITTALS

A. Furnish extra materials that match products installed and that are packaged with protective covering for storage and identified with labels describing contents.

1. Floor Tile: Furnish one box for every 60 boxes or fraction thereof, of each type, color, and pattern of floor tile installed.

1.8 QUALITY ASSURANCE

A. Installer Qualifications: A qualified installer who employs workers for this Project who are competent in techniques required by manufacturer for floor tile installation and seaming method indicated.

1. Engage an installer who employs workers for this Project who are trained or certified by floor tile manufacturer for installation techniques required.

B. Mockups: Build mockups to verify selections made under Sample submittals, to demonstrate aesthetic effects, and to set quality standards for materials and execution.

1. Coordinate mockups in this Section with mockups specified in other Sections.

a. Size: Minimum (1) classroom for each type, color, and pattern in locations directed by Architect.

2. Approval of mockups does not constitute approval of deviations from the Contract Documents contained in mockups unless Architect specifically approves such deviations in writing.
3. Subject to compliance with requirements, approved mockups may become part of the completed Work if undisturbed at time of Substantial Completion.

1.9 DELIVERY, STORAGE, AND HANDLING

A. Store floor tile and installation materials in dry spaces protected from the weather, with ambient temperatures maintained within range recommended by manufacturer, but not less than 50 deg F or more than 90 deg F Store floor tiles on flat surfaces.

1.10 FIELD CONDITIONS

A. Maintain ambient temperatures within range recommended by manufacturer, but not less than 70 deg F or more than 95 deg F in spaces to receive floor tile during the following time periods:

1. 48 hours before installation.
2. During installation.
3. 48 hours after installation.

B. After installation and until Substantial Completion, maintain ambient temperatures within range recommended by manufacturer, but not less than 55 deg F or more than 95 deg F.

C. Close spaces to traffic during floor tile installation.

D. Close spaces to traffic for 48 hours after floor tile installation.

E. Install floor tile after other finishing operations, including painting, have been completed.

PART 2 - PRODUCTS

2.1 PERFORMANCE REQUIREMENTS

A. Fire-Test-Response Characteristics: For resilient tile flooring, as determined by testing identical products according to ASTM E 648 or NFPA 253 by a qualified testing agency.

1. Critical Radiant Flux Classification: Class I, not less than 0.45 W/sq. cm.

2.2 QUARTZ COMPOSITE FLOOR TILE (QCT)

A. Products: Subject to compliance with requirements, provide the following:

1. Manufacturer: Kahr International.
2. Collection: Upo, Quartz Mosaic Collection.

3. Thickness: 2mm.
4. Size: 24 inches by 24 inches.
1. Colors:

    a. Field: 8301 Howlite White
    b. Accent A: 8302 Conglomerate Grey
    c. Accent B: 8317 Zebra Jasper
    d. Accent C: 8349 Crocoite Red

2.3 RUBBER FLOORING (RBR)

A. Product: Subject to compliance with requirements, provide the following:

1. Manufacturer: Tarkett – Johnsonite
2. Product Standard: ASTM F1344.

    a. Group: 1-A (solid, homogeneous)

3. Thickness: 0.125 inch.
4. Size: 24 inches by 24 inches
5. Pattern: Hammered.
6. Color: As selected by Architect from manufacturer's full range of colors.

    a. Provide a minimum of (90) colors.

2.4 INSTALLATION MATERIALS

A. Trowelable Leveling and Patching Compounds: Latex-modified, portland cement based or blended hydraulic-cement-based formulation provided or approved by floor tile manufacturer for applications indicated.

B. Adhesives: Water-resistant type recommended by floor tile and adhesive manufacturers to suit floor tile, conductivity and substrate conditions indicated unless noted otherwise. Product cannot void any portion of the manufacturer's standard warranty.

1. Adhesives shall comply with the following limits for VOC content:

    a. Adhesives: 50 g/L or less.

2. Adhesives shall comply with the testing and product requirements of the California Department of Public Health's "Standard Method for the Testing and Evaluation of Volatile Organic Chemical Emissions from Indoor Sources Using Environmental Chambers."

3. Provide adhesive for the following substrates:

    a. Substrates without moisture vapor reduction admixture: Porous Adhesive.
    b. Substrates with moisture vapor reduction admixture: Non-Porous Adhesive.

PART 3 - EXECUTION

3.1 EXAMINATION

A. Examine substrates, with Installer present, for compliance with requirements for maximum moisture content and other conditions affecting performance of the Work.

1. Verify that finishes of substrates comply with tolerances and other requirements specified in other Sections and that substrates are free of cracks, ridges, depressions, scale, and foreign deposits that might interfere with adhesion of floor tile.

B. Proceed with installation only after unsatisfactory conditions have been corrected.

C. Receive Resilient Tile Floor Manufacturer’s written approval of substrate required before installation of any tile flooring. The Carpet and Resilient Tile Contractor is responsible for obtaining the Resilient Tile Flooring Manufacturer’s written approval of the floor as an acceptable substrate for the installation of manufacturer’s tile product specified. If the floor is not acceptable to the manufacturer, the general contractor is responsible for preparing the floor to receive the new tile, as specified in order paragraphs of this specification, including an underlayment or leveling compound where necessary to meet all requirements for a manufacturer’s approval of the substrate.

3.2 PREPARATION

A. Prepare substrates according to floor tile manufacturer's written instructions to ensure adhesion of resilient products.

B. Concrete Substrates: Prepare according to ASTM F 710.

1. Verify that substrates are dry and free of curing compounds, sealers, and hardeners.
2. Remove substrate coatings and other substances that are incompatible with adhesives and that contain soap, wax, oil, or silicone, using mechanical methods recommended by floor tile manufacturer. Do not use solvents.
3. Alkalinity and Adhesion Testing: Perform tests recommended by floor tile manufacturer. Proceed with installation only after substrate alkalinity falls within range on pH scale recommended by manufacturer in writing, but not less than 5 or more than 10 pH.
4. Moisture Testing: Proceed with installation only after substrates pass testing according to floor tile manufacturer's written recommendations, but not less stringent than the following:

a. Perform anhydrous calcium chloride test according to ASTM F 1869. Proceed with installation only after substrates have maximum moisture-vapor-emission rate of 3 lb of water/1000 sq. ft. in 24 hours.
b. Perform relative humidity test using in situ probes according to ASTM F 2170. Proceed with installation only after substrates have a maximum 75 percent relative humidity level.

C. Fill cracks, holes, and depressions in substrates with trowelable leveling and patching compound; remove bumps and ridges to produce a uniform and smooth substrate.

D. Do not install floor tiles until they are the same temperature as the space where they are to be installed.

1. At least 48 hours in advance of installation, move resilient floor tile and installation materials into spaces where they will be installed.

E. Immediately before installation, sweep and vacuum clean substrates to be covered by resilient floor tile.

3.3 FLOOR TILE INSTALLATION

A. Comply with manufacturer's written instructions for installing floor tile.

B. Lay out floor tiles from center marks established with principal walls, discounting minor offsets, so tiles at opposite edges of room are of equal width. Adjust as necessary to avoid using cut widths that equal less than one-half tile at perimeter.

1. Lay tiles in pattern indicated.

C. Match floor tiles for color and pattern by selecting tiles from cartons in the same sequence as manufactured and packaged, if so numbered. Discard broken, cracked, chipped, or deformed tiles.

1. Lay tiles with grain running in one direction.
2. Lay tiles in pattern of colors and sizes indicated on Drawings.
3. For all radius cuts, utilize laser or water jet cutting system. Tile shall not be cut in the field.

D. Scribe, cut, and fit floor tiles to butt neatly and tightly to vertical surfaces and permanent fixtures including built-in furniture, cabinets, pipes, outlets, and door frames.

E. Extend floor tiles into toe spaces, door reveals, closets, and similar openings. Extend floor tiles to center of door openings.

F. Maintain reference markers, holes, and openings that are in place or marked for future cutting by repeating on floor tiles as marked on substrates. Use chalk or other nonpermanent marking device.

G. Install floor tiles on covers for telephone and electrical ducts, building expansion-joint covers, and similar items in finished floor areas. Maintain overall continuity of color and pattern between pieces of tile installed on covers and adjoining tiles. Tightly adhere tile edges to substrates that abut covers and to cover perimeters.

H. Adhere floor tiles to flooring substrates using a full spread of adhesive applied to substrate to produce a completed installation without open cracks, voids, raising and puckering at joints, telegraphing of adhesive spreader marks, and other surface imperfections.

3.4 CLEANING AND PROTECTION

A. Comply with manufacturer's written instructions for cleaning and protecting floor tile.

B. Perform the following operations immediately after completing floor tile installation:

1. Remove adhesive and other blemishes from exposed surfaces.
2. Sweep and vacuum surfaces thoroughly.
3. Damp-mop surfaces to remove marks and soil.

C. Protect floor tile from mars, marks, indentations, and other damage from construction operations and placement of equipment and fixtures during remainder of construction period.

D. Cover floor tile until Substantial Completion.

END OF SECTION 096519

SECTION 096520 – RESILIENT SHEET FLOORING

PART 1 - GENERAL

1.1 RELATED DOCUMENTS

A. Drawings and general provisions of the Contract, including General and Supplementary Conditions and Division 01 Specification Sections, apply to this Section.

1.2 SUMMARY

A. Section includes:

1. Quartz resilient sheet flooring.

1.3 PREINSTALLATION MEETINGS

1. Preinstallation Conference: Conduct conference at Project site.

a. Attendees: The Installer and representatives as well as senior technician of manufacturers and fabricators involved in, or affected by the installation, and its coordination or integration with other materials and installations that have preceded or will follow, shall attend the meeting.

2. Review methods and procedures related to resilient flooring including, but not limited to, the following:

a. Inspect and discuss condition of substrate and other preparatory work performed by other trades.
b. Review and finalize construction schedule and verify availability of materials, Installer's personnel, equipment, and facilities needed to make progress and avoid delays.
c. Review special designs and patterns.

1.4 ACTION SUBMITTALS

A. Product Data: For each type of product.

B. Shop Drawings: For each type of flooring. Include flooring layouts, locations of seams, edges, columns, doorways, enclosing partitions, built-in furniture, cabinets, and cutouts.

1. Show details of special patterns.

C. Samples for Initial Selection: Samples: Contractor shall provide manufacturer's color PDF images of resilient flooring for review & approval. Actual samples are NOT required unless specifically requested by the architect/interior designer.

D. Welded-Seam Samples: For seamless-installation technique indicated and for each resilient sheet flooring product, color, and pattern required; with seam running lengthwise and in center of 6-by-9-inch Sample applied to a rigid backing and prepared by Installer for this Project.

1.5 INFORMATIONAL SUBMITTALS

A. Qualification Data: For Installer.

1.6 CLOSEOUT SUBMITTALS

A. Maintenance Data: For each type of resilient sheet flooring to include in maintenance manuals.

1.7 MAINTENANCE MATERIAL SUBMITTALS

A. Furnish extra materials that match products installed and that are packaged with protective covering for storage and identified with labels describing contents.

1. Resilient Sheet Flooring: Furnish not less than 10 linear feet for every 500 linear feet or fraction thereof, in roll form and in full roll width for each type, color, and pattern of flooring installed.

1.8 QUALITY ASSURANCE

A. Installer Qualifications: A qualified installer who employs workers for this Project who are competent in techniques required by manufacturer for resilient sheet flooring installation and seaming method indicated.

1. Engage an installer who employs workers for this Project who are trained or certified by resilient sheet flooring manufacturer for installation techniques required.

B. Mockups: Build mockups to verify selections made under Sample submittals and to demonstrate aesthetic effects and set quality standards for materials and execution.

1. Build mockups for resilient sheet flooring, including base and accessories.

a. Size: Minimum 100 sq. ft. for each type, color and pattern in locations directed by Architect.

2. Approval of mockups does not constitute approval of deviations from the Contract Documents contained in mockups unless Architect specifically approves such deviations in writing.
3. Subject to compliance with requirements, approved mockups may become part of the completed Work if undisturbed at time of Substantial Completion.

1.9 DELIVERY, STORAGE, AND HANDLING

A. Store resilient sheet flooring and installation materials in dry spaces protected from the weather, with ambient temperatures maintained within range recommended by manufacturer, but not less than 50 deg F or more than 90 deg F. Store rolls upright.

1.10 FIELD CONDITIONS

A. Maintain ambient temperatures within range recommended by manufacturer, but not less than 70 deg F or more than 85 deg F in spaces to receive resilient sheet flooring during the following time periods:

1. 48 hours before installation.
2. During installation.
3. 48 hours after installation.

B. After installation and until Substantial Completion, maintain ambient temperatures within range recommended by manufacturer, but not less than 55 deg F or more than 95 deg F.

C. Close spaces to traffic during resilient sheet flooring installation.

D. Close spaces to traffic for 48 hours after resilient sheet flooring installation.

E. Install resilient sheet flooring after other finishing operations, including painting, have been completed.

PART 2 - PRODUCTS

2.1 PERFORMANCE REQUIREMENTS

A. Fire-Test-Response Characteristics: For resilient sheet flooring, as determined by testing identical products according to ASTM E 648 or NFPA 253 by a qualified testing agency.

1. Critical Radiant Flux Classification: Class I, not less than 0.45 W/sq. cm.

B. QUARTZ SHEET FLOORING (QSV)

1. Basis-of-Design Product: Subject to compliance with requirements, provide the following product.

a. Altro USA, Inc., Slip Resistant Sheet Vinyl Safety Flooring.

2. Product Standard: Aluminum trioxide, natural aggregates and colored quartz throughout the thickness; ASTM F 1303.
3. Thickness: 0.12 inch.
4. Wearing Surface: Slip resistant.
5. Sheet Width: 6 feet, 7 inches.
6. Seamless-Installation Method: Vinyl welded Seams.
7. Pattern: Stronghold 30

8. Color: As selected by Architect from manufacturer's full range of colors.
9. Integral Base Height: 6-inches.

2.2 INSTALLATION MATERIALS

A. Trowelable Leveling and Patching Compounds: Latex-modified, portland cement based or blended hydraulic-cement-based formulation provided or approved by resilient sheet flooring manufacturer for applications indicated.

B. Adhesives: Water-resistant type recommended by flooring and adhesive manufacturers to suit resilient sheet flooring and substrate conditions indicated.

1. Substrates without moisture vapor reduction admixture: Porous Adhesive.
2. Substrates with moisture vapor reduction admixture: Non-Porous Adhesive.

C. Seaming Accessories: Solid Vinyl Weld Rods.

1. Color: As selected by Architect from manufacturer's full range of colors.

D. Integral-Flash-Cove-Base Accessories:

1. Cove Strip: 1-inch radius provided or approved by resilient sheet flooring manufacturer.

a. Color: As selected by Architect from manufacturer's full range of colors.

2. Cap Strip: Rubber cap approved by resilient sheet flooring manufacturer.
3. Corners: Metal inside and outside corners and end stops provided or approved by resilient sheet flooring manufacturer.

E. Accessories: Provide per manufacturer's written recommendations.

1. Vinyl Welding Rod:
2. Cove Former:
3. Cap Strip:
4. Corners:
5. Drains & Penetrations:
6. Pipes & Penetrations:

PART 3 - EXECUTION

3.1 EXAMINATION

A. Examine substrates, with Installer present, for compliance with requirements for maximum moisture content and other conditions affecting performance of the Work.

1. Verify that finishes of substrates comply with tolerances and other requirements specified in other Sections and that substrates are free of cracks, ridges, depressions, scale, and foreign deposits that might interfere with adhesion of resilient sheet flooring.

B. Proceed with installation only after unsatisfactory conditions have been corrected.

3.2 PREPARATION

A. Prepare substrates according to resilient sheet flooring manufacturer's written instructions to ensure adhesion of resilient sheet flooring.

1. Concrete Substrates: Prepare according to ASTM F 710.

1. Verify that substrates are dry and free of curing compounds, sealers, and hardeners.
2. Remove substrate coatings and other substances that are incompatible with adhesives and that contain soap, wax, oil, or silicone, using mechanical methods recommended by floor tile manufacturer. Do not use solvents.
3. Alkalinity and Adhesion Testing: Perform tests recommended by floor tile manufacturer. Proceed with installation only after substrate alkalinity falls within range on pH scale recommended by manufacturer in writing, but not less than 5 or more than 10 pH.
4. Moisture Testing: Proceed with installation only after substrates pass testing according to floor tile manufacturer's written recommendations, but not less stringent than the following:

a. Perform anhydrous calcium chloride test according to ASTM F 1869. Proceed with installation only after substrates have maximum moisture-vapor-emission rate of 3 lb of water/1000 sq. ft. in 24 hours.
b. Perform relative humidity test using in situ probes according to ASTM F 2170. Proceed with installation only after substrates have a maximum 75 percent relative humidity level.’

B. Fill cracks, holes, and depressions in substrates with trowelable leveling and patching compound; remove bumps and ridges to produce a uniform and smooth substrate.

C. Do not install resilient sheet flooring until it is the same temperature as the space where it is to be installed.

1. At least 48 hours in advance of installation, move flooring and installation materials into spaces where they will be installed.

D. Immediately before installation, sweep and vacuum clean substrates to be covered by resilient sheet flooring.

3.3 RESILIENT SHEET FLOORING INSTALLATION

A. Comply with manufacturer's written instructions for installing resilient sheet flooring.

B. Unroll resilient sheet flooring and allow it to stabilize before cutting and fitting.

C. Lay out resilient sheet flooring as follows:

1. Maintain uniformity of flooring direction.
2. Do Not Reverse-Random Match.

3. Minimize number of seams; place seams in inconspicuous and low-traffic areas, at least 6 inches away from parallel joints in flooring substrates.
4. Match edges of flooring for color shading at seams.
5. Avoid cross seams.

D. Scribe and cut resilient sheet flooring to butt neatly and tightly to vertical surfaces, permanent fixtures, and built-in furniture including cabinets, pipes, outlets, and door frames.

E. Extend resilient sheet flooring into toe spaces, door reveals, closets, and similar openings.

F. Maintain reference markers, holes, and openings that are in place or marked for future cutting by repeating on resilient sheet flooring as marked on substrates. Use chalk or other nonpermanent marking device.

G. Install resilient sheet flooring on covers for telephone and electrical ducts and similar items in installation areas. Maintain overall continuity of color and pattern between pieces of flooring installed on covers and adjoining flooring. Tightly adhere flooring edges to substrates that abut covers and to cover perimeters.

H. Adhere resilient sheet flooring to substrates using a full spread of adhesive applied to substrate to produce a completed installation without open cracks, voids, raising and puckering at joints, telegraphing of adhesive spreader marks, and other surface imperfections.

I. Seam Installation:

1. Vinyl welding rod.

J. Integral-Flash-Cove Base: Cove resilient sheet flooring 6 inches up vertical surfaces. Support flooring at horizontal and vertical junction with cove strip. Butt at top against cap strip.

1. Install metal corners at inside and outside corners.

3.4 CLEANING AND PROTECTION

A. Comply with manufacturer's written instructions for cleaning and protecting resilient sheet flooring.

B. Perform the following operations immediately after completing resilient sheet flooring installation:

1. Remove adhesive and other blemishes from surfaces.
2. Sweep and vacuum surfaces thoroughly.
3. Damp-mop surfaces to remove marks and soil.

C. Protect resilient sheet flooring from mars, marks, indentations, and other damage from construction operations and placement of equipment and fixtures during remainder of construction period.

D. Cover resilient sheet flooring until Substantial Completion.

END OF SECTION 096520

SECTION 096723 – RESINOUS FLOORING

PART 1 – GENERAL

1.1 RELATED DOCUMENTS

A. Drawings and general provisions of the Contract, including General and Supplementary Conditions and Division 01 Specification Sections, apply to this Section.

1.2 SUMMARY

A. Section Includes:

1. Resinous flooring systems.
2. Engineered marble thresholds.
3. Metal edge trim.

B. Related Requirements:

1. Division 3 Sections “Cast-in-Place Concrete” for Moisture Vapor Reduction Admixture.
2. Division 3 Section “Hydraulic Cement Underlayment” for Self-Leveling Underlayment.
3. Division 7 Section "Joint Sealants" for sealants installed at joints in resinous flooring systems.
4. Division 9 Section “Gypsum Board” for base backing panels.

1.3 PREINSTALLATION MEETINGS

A. Preinstallation Conference: Conduct conference at Project site.

1. Attendees: The Installer and representatives as well as senior technician of manufacturers and fabricators involved in, or affected by the installation, and its coordination or integration with other materials and installations that have preceded or will follow, shall attend the meeting.

B. Review methods and procedures related to resinous including, but not limited to, the following:

1. Inspect and discuss condition of substrate and other preparatory work performed by other trades.
2. Review and finalize construction schedule and verify availability of materials, Installer's personnel, equipment, and facilities needed to make progress and avoid delays.
3. Review special designs and patterns.

1.4 ACTION SUBMITTALS

A. Product Data: Submit manufacturer's technical data, installation instructions, and

general recommendations for each resinous flooring material required. Include Health Product Declaration (HPD's) and certifications indicating compliance of materials with requirements.

B. Samples for Verification: For each resinous flooring system required, 4.25 inches square, applied to a rigid backing in color and finish and topcoat indicated.

C. Product Schedule: Use resinous flooring designations indicated in Part 2 and room designations indicated on drawings in product schedule.

D. Maintenance & Cleaning Data: For resinous flooring to include in maintenance manuals.

1.5 INFORMATIONAL SUBMITTALS

A. Installer Certificates: Signed by manufacturer certifying that installers comply with specified requirements.

B. Material Certificates: For each resinous flooring component, from manufacturer.

C. Material Test Reports: For each resinous flooring system.

1.6 CLOSEOUT SUBMITTALS

A. Maintenance Data: For resinous flooring to include in maintenance manuals.

1.7 QUALITY ASSURANCE

A. No request for substitution shall be considered that would change the generic type of floor system specified (i.e. epoxy broadcast based system with stained concrete look).

B. Installer Qualifications: Manufacturer's authorized representative who is trained and approved for installation of flooring systems required for this Project.

1. Engage an installer who is certified in writing by resinous flooring manufacturer as qualified to apply resinous flooring systems indicated.

C. Source Limitations: Obtain primary resinous flooring materials, including primers, resins, hardening agents, grouting coats, and topcoats, from single source from single manufacturer. Provide secondary materials, including patching and fill material, joint sealant, and repair materials, of type and from source recommended by manufacturer of primary materials.

D. Source Limitations for Other Products: Obtain each of the following products specified in this Section from a single manufacturer for each product:

1. Engineered marble thresholds.
2. Metal edge trim.

F. Mockups: Build mockups to verify selections made under Sample submittals and to demonstrate aesthetic effects and set quality standards for materials and execution.

1. Apply full-thickness mockups on 100-inch square floor area selected by Architect.
2. Include 100-inch length of integral cove base with inside and outside corner.
3. Simulate finished lighting conditions for Architect's review of mockups.
4. Approval of mockups does not constitute approval of deviations from the Contract Documents contained in mockups unless Architect specifically approves such deviations in writing.
5. Subject to compliance with requirements, approved mockups may become part of the completed Work if undisturbed at time of Substantial Completion.

G. ISO 9001-2008: All materials, including primers, resins, curing agents, finish coats, aggregates and sealants are manufactured and tested under an ISO 9001 registered quality system.

1.8 DELIVERY, STORAGE, AND HANDLING

A. Add material shall be delivered to job site and checked by flooring contractor for completeness and shipping damage prior to job start.

B. Store components protected from exposure to harmful weather conditions and in a temperature controlled area as recommended by manufacturer. Do not allow product to freeze.

C. Deliver products to areas to receive moisture treatment at least 48 hours prior to application to allow them to acclimate to the space.

D. All materials used shall be factory pre-weighed and pre-packaged in single, easy to manage batches to eliminate onsite mixing errors. No onsite weighing or volumetric measurements allowed.

1.9 ENVIRONMENTAL CONDITIONS

A. Environmental Limitations: Comply with resinous flooring manufacturer’s written instructions for substrate temperature, ambient temperature, moisture, ventilation, and other conditions affecting resinous flooring application.

1. Maintain material and substrate temperature between 65 and 85°F (18 and 30°C) during resinous flooring application and for not less than 24 hours after application.

B. Lighting: Provide permanent lighting or, if permanent lighting is not in place, simulate permanent lighting conditions during resinous flooring application.

C. Close spaces to traffic during resinous flooring application and for not less than 24

hours after application, unless manufacturer recommends a longer period.

D. Concrete substrate shall be properly cured for a minimum of 30 days. A vapor barrier must be present for concrete subfloors on or below grade. Otherwise, an osmotic pressure resistant grout must be installed prior to the resinous flooring.

E. Protection: Precautions shall be taken to avoid damage or contamination of any surfaces near the work zone.

F. Do not install product of this Section until one (1) week after building is enclosed and weatherproof, wet work in space is completed and nominally dry, and HVAC system is operating and maintaining temperature and relative humidity at occupancy levels during the remainder of the construction period.

1.10 WARRANTY

A. Manufacturer shall furnish a single, written warranty covering both material and workmanship for a period of one (1) full year from date of installation, or provide a joint and several warranty signed on a single document by material manufacturer and applicator jointly and severally warranting the materials and workmanship for a period of one (1) full year from date of installation. A sample warranty letter must be included with bid package or bid may be disqualified.

PART 2 – PRODUCTS

2.1 MATERIALS

A. VOC Content of Liquid-Applied Flooring Components: Mot more than 100 g/L when calculated according to 40 CFR 59, Subpart D (EPA Method 24):

2.2 MANUFACTURERS

B. Acceptable Manufacturers: Subject to compliance with requirements, the following manufacturers' products may be incorporated into the Work:

1. Basis of Design:

a. Stonhard

2. Approved Manufacturers:

a. Sherwin-Williams Company; General Polymers.
b. Key Resin/Durex.
c. Industrial Floor Corporation.
d. Tnemec Company Inc.

2.3 RESINOUS FLOORING (RES1)

A. Resinous Flooring System

1. Basis of Design: "Stonclad GS with Tectop EF flake system with Stonproof ME7 Waterproofing System" as manufactured by Stonhard, Inc.; nominal 3/16-inch (5-mm) -thick system comprised of a penetrating, moisture tolerant, two-component epoxy primer, a high-performance, three-component mortar consisting of epoxy resin, curing agent and selected, graded aggregates blended with inorganic pigments and two-component, 100-percent solids undercoat, brightly colored flake broadcast and two coats of a high-performance, two-component, clear 100-percent solids epoxy sealer.

   a. Build-up of broadcast- or liquid-rich (slurry) -type systems shall not be accepted.

B. System Characteristics:

1. Color and Pattern: Custom.
2. Wearing Surface: Texture field.
3. Integral Cove Base: 6 inches.
4. Overall System Thickness: Nominal 1/4-inch.
5. Flake Size: 1/4-inch.

C. System Components: Manufacturer's standard components that are compatible with each other and as follows:

1. Body Coat(s): Stonclad GS
   a. Resin: Epoxy.
   b. Formulation Description: 100 percent solids.

2. Application Method: Metal Trowel
   c. Thickness of Coats: 1/4-inch.
   d. Number of Coats: One.
   e. Aggregates: Pigmented Blended aggregate.

3. Undercoat(s): Tectop Undercoat
   a. Resin: Epoxy.
   b. Type: Pigmented.
   c. Formulation Description: 100% high solids.

4. Broadcast Aggregate:
   a. Multi-color vinyl flakes broadcast.
   b. Number of broadcasts: To refusal.

5. Topcoats: Tectop Sealer
   a. Resin: Epoxy.
   b. Formulation Description: 100% high solids.
   c. Type: Clear gloss.
   d. Number of Coats: Two.
   e. Finish: Confirm texture for anti-slip texture with Owner.

2.4 RESINOUS FLOORING (RES2)

1. Basis of Design Stontec TRF as manufactured by Stonhard, Inc., Maple Shade, NJ, Phil Long (717)961-11856, is a nominal 3/16"/5mm thick system comprised of a flexible urethane waterproof membrane, a penetrating three-component urethane primer, a high performance, four-component mortar consisting of urethane resin, curing agent, selected, graded aggregates and inorganic pigments, two-component, epoxy undercoat, brightly colored flake broadcast and two coats of a high performance, two-component, clear urethane UV resistant, aliphatic polyaspartic urethane sealer. Provide were indicated on Room Finish Schedule. Note: Tectuxe shall be added to final clear coat to create a slip resistant surface.
    a. Build-up of broadcast- or liquid-rich (slurry) -type systems shall not be accepted.

B. System Characteristics:

1. Color and Pattern: Custom.
2. Wearing Surface: Texture to be verified by Owner.
3. Integral Cove Base: 6 inches.
4. Overall System Thickness: Nominal 3/16-inch.
5. Flake Size: 1/4-inch.

C. System Components: Manufacturer's standard components that are compatible with each other and as follows:

1. Body Coat(s): <u>Stonclad GS</u>
    a. Resin: Urethane
    b. Formulation Description: 100 percent high solids

2. Application Method: Metal Trowel
    a. Thickness of Coats: 1/4-inch.
    b. Number of Coats: One.
    c. Aggregates: Pigmented Blended aggregate.

3. Undercoat(s): Tectop Undercoat
    a. Resin: Urethane.
    b. Type: Pigmented.
    c. Formulation Description: 100% high solids.

4. Broadcast Aggregate:
    a. Multi-color vinyl flakes broadcast
    b. Number of broadcasts: To refusal.

5. Topcoats: Tectop Sealer
    a. Resin: Urethane.
    b. Formulation Description: 100% high solids.
    c. Type: Clear gloss.
    d. Number of Coats: Two.

e. Finish: Confirm texture for anti-slip texture with Owner.

2.5 ACCESSORY MATERIALS

A. Primer: 100-percent solids, with type as recommended by manufacturer for substrate and body coats indicated; equal to Stonhard "Standard Primer."

B. Waterproofing Membrane: Type as recommended by manufacturer for substrate and primer and body coats indicated.

C. Patching and Fill Material: Resinous product of or approved by resinous flooring manufacturer and recommended by manufacturer for application indicated.

D. Joint Sealant: Type recommended or produced by resinous flooring manufacturer for type of service and joint condition indicated. Allowances should be included for Stonflex MP7 joint fill material.

2.6 THRESHOLDS

A. General: Fabricate to sizes and profiles indicated or required to provide transition between adjacent floor finishes.

1. Bevel edges at 1:2 slope, with lower edge of bevel aligned with or up to 1/16 inch above adjacent floor surface. Finish bevel to match top surface of threshold. Limit height of threshold to 1/2 inch or less above adjacent floor surface.

B. Engineered Marble Thresholds:

1. Manufacture: MSI or Equal.
2. Color: As selected by Architect from manufacturer's full range.
3. Finish: Polished.

2.7 METAL EDGE STRIPS

A. Metal Edge Strips: Provide angle or L-shaped, strips equal to Schluter System for transitions from backer board substrate and resinous base to adjacent materials for wall transitions. Refer to Drawings for details, and the following:

1. Wall Tile to Resinous Base Trim: Schluter Systems "Schiene", Finish: Satin nickel anodized aluminum.

PART 3 – EXECUTION

3.1 PREPARATION

A. General: Prepare and clean substrates according to resinous flooring manufacturer's written instructions for substrate indicated. Provide clean, dry, and neutral Ph substrate for resinous flooring application.

B. Concrete Substrates: Provide sound concrete surfaces free of laitance, glaze, efflorescence, curing compounds, form-release agents, dust, dirt, grease, oil, and other contaminants incompatible with resinous flooring.

1. Roughen concrete substrates as follows:

a. Shot-blast surfaces with an apparatus that abrades the concrete surface, contains the dispensed shot within the apparatus, and re-circulates the shot by vacuum pickup.
b. Comply with ASTM C 811 requirements, unless manufacturer's written instructions are more stringent.

2. Repair damaged and deteriorated concrete according to resinous flooring manufacturer's written recommendations.

3. Verify that concrete substrates are dry and moisture-vapor emissions are within acceptable levels according to manufacturer's written instructions.

a. Perform anhydrous calcium chloride test, ASTM F 1869. Proceed with application of resinous flooring only after substrates have maximum moisture-vapor-emission rate of 3 lb of water/1000 sq. ft. of slab area in 24 hours.
b. Perform plastic sheet test, ASTM D 4263. Proceed with application only after testing indicates absence of moisture in substrates.
c. Perform in situ probe test, ASTM F 2170. Proceed with application only after substrates do not exceed a maximum potential equilibrium relative humidity of 85 percent.
d. Perform additional moisture tests recommended by manufacturer. Proceed with application only after substrates pass testing.

4. Alkalinity and Adhesion Testing: Verify that concrete substrates have neutral Ph and that resinous flooring will adhere to them. Perform tests recommended by manufacturer. Proceed with application only after substrates pass testing.

C. Resinous Materials: Mix components and prepare materials according to resinous flooring manufacturer's written instructions.

D. Use patching and fill material to fill holes and depressions in substrates according to manufacturer's written instructions.

E. Treat control joints and other non-moving substrate cracks to prevent cracks from reflecting through resinous flooring according to manufacturer's written recommendations.

3.2 APPLICATION

A. General: Apply components of resinous flooring system according to manufacturer's written instructions to produce a uniform, monolithic wearing surface of thickness indicated.

1. Coordinate application of components to provide optimum adhesion of resinous

flooring system to substrate, and optimum intercoat adhesion.

2. Cure resinous flooring components according to manufacturer’s written instructions. Prevent contamination during application and curing processes.

3. At substrate expansion and isolation joints, provide joint in resinous flooring to comply with resinous flooring manufacturer’s written recommendations.

   a. Apply joint sealant to comply with manufacturer’s written recommendations.

B. Apply primer where required by resinous system, over prepared substrate at manufacturer’s recommended spreading rate.

C. Apply waterproofing membrane, where indicated, in manufacturer's recommended thickness.

   1. Apply waterproofing membrane to integral cove base substrates.

D. Apply reinforcing membrane to substrate cracks.

E. Integral Cove Base: Apply cove base mix to wall surfaces before applying flooring. Apply according to manufacturer's written instructions and details including those for taping, mixing, priming, troweling, sanding, and top-coating of cove base. Round internal and external corners.

   1. Integral Cove Base: 6-inches high. Refer to drawings for detail.

F. Apply self-leveling slurry body coats in thickness indicated for flooring system.

G. Apply grout coat, of type recommended by resinous flooring manufacturer, to fill voids in surface of final body coat and to produce wearing surface indicated.

H. Apply topcoats in number indicated for flooring system and at spreading rates recommended in writing by manufacturer.

3.3 TERMINATIONS/TRANSITIONS

A. Chase edges to “lock” the flooring system into the concrete substrate along lines of termination.

B. Penetration Treatment: Lap and seal flooring system onto the perimeter of the penetrating item by bridging over compatible elastomer at the interface to compensate for possible movement.

C. Trenches: Continue flooring system into trenches to maintain monolithic protection. Treat cold joints to assure bridging of potential cracks.

D. Treat floor drains by chasing the flooring system to lock in place at point of termination.

3.4 JOINTS AND CRACKS

A. Treat control joints to bridge potential cracks and to maintain monolithic protection.

B. Treat cold joints and construction joints to bridge potential cracks and to maintain monolithic protection on horizontal and vertical surfaces as well as horizontal and vertical interfaces.

C. Discontinue floor coating system at vertical and horizontal contraction and expansion joints by installing backer rod and compatible sealant after coating installation is completed. Provide sealant type recommended by manufacturer for traffic conditions and chemical exposures to be encountered.

3.5 FIELD QUALITY CONTROL

A. Material Sampling: Owner may at any time and any number of times during resinous flooring application require material samples for testing for compliance with requirements.

1. Owner will engage an independent testing agency to take samples of materials being used. Material samples will be taken, identified, sealed, and certified in presence of Contractor.

2. Testing agency will test samples for compliance with requirements, using applicable referenced testing procedures or, if not referenced, using testing procedures listed in manufacturer's product data.

3. If test results show applied materials do not comply with specified requirements, pay for testing, remove non-complying materials, prepare surfaces coated with unacceptable materials, and reapply flooring materials to comply with requirements.

3.6 CLEANING, PROTECTING, AND CURING

A. Cure resinous flooring materials in compliance with manufacturer's directions, taking care to prevent contamination during stages of application and prior to completion of curing process. Close area of application for a minimum of 18 hours.

B. Protect resinous flooring materials from damage and wear during construction operation. Where temporary covering is required for this purpose, comply with manufacturer's recommendations for protective materials and method of application. General Contractor is responsible for protection and cleaning of surfaces after final coats.

C. Cleaning: Remove temporary covering and clean resinous flooring just prior to final inspection. Use cleaning materials and procedures recommended by resinous flooring manufacturer.

END OF SECTION 096723

SECTION 096813 – TILE CARPETING

PART 1 - GENERAL

1.1 RELATED DOCUMENTS

A. Drawings and general provisions of the Contract, including General and Supplementary Conditions and Division 01 Specification Sections, apply to this Section.

1.2 SUMMARY

A. Section includes:

1. Modular carpet tile.
2. Entrance mat tile.

B. Related Requirements:

1. Division 3 Section “Cast-in-Place Concrete” for moisture vapor reduction admixture.
2. Division 3 Section “Hydraulic Cement Underlayment” for Self-Leveling Underlayment.
3. Division 9 Section "Resilient Base and Accessories" for resilient wall base and accessories installed with carpet tile.

1.3 PREINSTALLATION MEETINGS

A. Pre-installation Conference: Conduct conference at Project site.

1. Attendees: The Installer and representatives as well as senior technician of manufacturers and fabricators involved in, or affected by the installation, and its coordination or integration with other materials and installations that have preceded or will follow, shall attend the meeting.
2. Review methods and procedures related to resilient flooring including, but not limited to, the following:
   a. Inspect and discuss condition of substrate and other preparatory work performed by other trades.
   b. Review and finalize construction schedule and verify availability of materials, Installer's personnel, equipment, and facilities needed to make progress and avoid delays.
   c. Review special designs and patterns.
   d. Review delivery, storage, and handling procedures.
   e. Review ambient conditions and ventilation procedures.
   f. Review subfloor preparation procedures.

1.4 ACTION SUBMITTALS

A. Product Data: For each type of product.

1. Include manufacturer's written data on physical characteristics, durability, and fade resistance.
2. Include installation recommendations for each type of substrate.

B. Shop Drawings: Show the following:

1. Columns, doorways, enclosing walls or partitions, built-in cabinets, and locations where cutouts are required in carpet tiles.
2. Carpet tile type, color, and dye lot.
3. Type of subfloor.
4. Type of installation.
5. Pattern of installation.
6. Pattern type, location, and direction.
7. Pile direction.
8. Type, color, and location of insets and borders.
9. Type, color, and location of edge, transition, and other accessory strips.
10. Transition details to other flooring materials.

C. Samples: Contractor shall provide manufacturer’s color PDF images of carpet tile for review & approval. Actual samples are NOT required unless specifically requested by the architect/interior designer.

D. Product Schedule: For carpet tile. Use same designations indicated on Drawings.

1.5 INFORMATIONAL SUBMITTALS

A. Qualification Data: For Installer.

B. Product Test Reports: For carpet tile, for tests performed by a qualified testing agency.

C. Sample Warranty: For special warranty.

1.6 CLOSEOUT SUBMITTALS

A. Maintenance Data: For carpet tiles to include in maintenance manuals. Include the following:

1. Methods for maintaining carpet tile, including cleaning and stain-removal products and procedures and manufacturer's recommended maintenance schedule.
2. Precautions for cleaning materials and methods that could be detrimental to carpet tile.

1.7 MAINTENANCE MATERIAL SUBMITTALS

A. Furnish extra materials, from the same product run, that match products installed and that are packaged with protective covering for storage and identified with labels describing contents.

1. Carpet Tile: Full-size units equal to 3 percent of amount installed for each type indicated, but not less than 10 sq. yd.

1.8 QUALITY ASSURANCE

A. Installer Qualifications: An experienced installer who is certified by the International Certified Floor covering Installers Association at the Master II certification level.

B. Fire-Test-Response Ratings: Where indicated, provide carpet tile identical to those of assemblies tested for fire response according to NFPA 253 by a qualified testing agency.

C. Mockups: Build mockups to verify selections made under Sample submittals, to demonstrate aesthetic effects, and to set quality standards for fabrication and installation.

1. Coordinate mockups in this Section with mockups specified in other Sections.

a. Size: Minimum 100 sq. ft. for each type, color, and pattern in locations directed by Architect.

2. Approval of mockups does not constitute approval of deviations from the Contract Documents contained in mockups unless Architect specifically approves such deviations in writing.
3. Subject to compliance with requirements, approved mockups may become part of the completed Work if undisturbed at time of Substantial Completion.

1.9 DELIVERY, STORAGE, AND HANDLING

A. Comply with CRI 104.

1.10 FIELD CONDITIONS

A. Comply with CRI 104 for temperature, humidity, and ventilation limitations.

B. Environmental Limitations: Do not deliver or install carpet tiles until spaces are enclosed and weathertight, wet work in spaces is complete and dry, and ambient temperature and humidity conditions are maintained at occupancy levels during the remainder of the construction period.

C. Do not install carpet tiles over concrete slabs until slabs have cured and are sufficiently dry to bond with adhesive and concrete slabs have pH range recommended by carpet tile manufacturer.

D. Where demountable partitions or other items are indicated for installation on top of carpet tiles, install carpet tiles before installing these items.

1.11 WARRANTY

A. Special Warranty for Carpet Tiles: Manufacturer agrees to repair or replace components of carpet tile installation that fail in materials or workmanship within specified warranty period.

1. Warranty does not include deterioration or failure of carpet tile due to unusual traffic, failure of substrate, vandalism, or abuse.
2. Failures include, but are not limited to, more than 10 percent edge raveling, snags, runs, dimensional stability, excess static discharge, loss of tuft bind strength, loss of face fiber, and delamination.
3. Warranty Period: 10 years from date of Substantial Completion.

PART 2 - PRODUCTS

2.1 CARPET TILE (CPT1)

A. Basis-of-Design Product: Subject to compliance with requirements, provide the following product:

1. Manufacturer: Shaw Contract.
2. Collection: Assembly.
3. Pattern: Convene 5T269.
4. Color: 67556 Radiant Link
5. Size: 12 inches by 48 inches
6. Pattern: Refer to drawings.
7. Backing: Ecoworx.
8. Installation Method: Staggered.

2.2 CARPET TILE (CPT2)

A. Basis-of-Design Product: Subject to compliance with requirements, provide the following product:

1. Manufacturer: Shaw Contract.
2. Collection: Assembly.
3. Pattern: Support Tile 5T267.
4. Color: 67555 Link.
5. Size: 12 inches by 48 inches
6. Pattern: Refer to drawings.
7. Backing: Ecoworx.
8. Installation Method: Staggered.

2.3 ENTRANCE MAT (EM)

A. Basis-of-Design Product: Subject to compliance with requirements, provide the following product:

1. Manufacturer: Shaw Contract.
2. Collection: Steppin Out
3. Pattern: Welcome II Tile 5T031
4. Color: 31500 Ebony
5. Size: 24 inches by 24 inches
6. Backing: Ecoworx.
7. Installation Method: Quarter Turn

2.4 INSTALLATION ACCESSORIES

A. Trowelable Leveling and Patching Compounds: Latex-modified, hydraulic-cement-based formulation provided or recommended by carpet tile manufacturer.

B. Adhesives: Water-resistant, mildew-resistant, nonstaining, pressure-sensitive type to suit products and subfloor conditions indicated, that comply with flammability requirements for installed carpet tile, and are recommended by carpet tile manufacturer for releasable installation on porous and non-porous surfaces.

1. Substrates without moisture vapor reduction admixture: Porous Adhesive.
2. Substrates with moisture vapor reduction admixture: Non-Porous Adhesive.
3. Entrance Mat: 3800 Indoor/Outdoor Adhesive.

PART 3 - EXECUTION

3.1 EXAMINATION

A. Examine substrates, areas, and conditions, with Installer present, for compliance with requirements for maximum moisture content, alkalinity range, installation tolerances, and other conditions affecting carpet tile performance.

B. Examine carpet tile for type, color, pattern, and potential defects.

C. Concrete Subfloors: Verify that concrete slabs comply with ASTM F 710 and the following:

1. Slab substrates are dry and free of curing compounds, sealers, hardeners, and other materials that may interfere with adhesive bond. Determine adhesion and dryness characteristics by performing bond and moisture tests recommended by carpet tile manufacturer.
2. Subfloor finishes comply with requirements specified in Division Section 3 "Cast-in-Place Concrete" for slabs receiving carpet tile.
3. Subfloors are free of cracks, ridges, depressions, scale, and foreign deposits.

D. For wood subfloors, where occur, verify the following:

1. Underlayment over subfloor complies with requirements specified in Division Section 6 "Rough Carpentry."
2. Underlayment surface is free of irregularities and substances that may interfere with adhesive bond or show through surface.

E. Proceed with installation only after unsatisfactory conditions have been corrected.

3.2 PREPARATION

A. General: Comply with CRI 104, Section 6.2, "Site Conditions; Floor Preparation," and with carpet tile manufacturer's written installation instructions for preparing substrates indicated to receive carpet tile installation.

B. Use trowelable leveling and patching compounds, according to manufacturer's written instructions, to fill cracks, holes, depressions, and protrusions in substrates. Fill or level cracks, holes and depressions 1/8 inch wide or wider and protrusions more than 1/32 inch unless more stringent requirements are required by manufacturer's written instructions.

C. Remove coatings, including curing compounds, and other substances that are incompatible with adhesives and that contain soap, wax, oil, or silicone, without using solvents. Use mechanical methods recommended in writing by carpet tile manufacturer.

D. Clean metal substrates of grease, oil, soil and rust, and prime if directed by adhesive manufacturer. Rough sand painted metal surfaces and remove loose paint. Sand aluminum surfaces, to remove metal oxides, immediately before applying adhesive.

E. Broom and vacuum clean substrates to be covered immediately before installing carpet tile.

3.3 INSTALLATION

A. General: Comply with CRI 104, Section 14, "Carpet Modules," and with carpet tile manufacturer's written installation instructions.

B. Installation Method: As recommended in writing by carpet tile manufacturer.

1. Carpet installation shall begin at the center point of the room and work out to the perimeter walls. Installation pattern to be ashlar.

C. Maintain dye lot integrity. Do not mix dye lots in same area.

D. Cut and fit carpet tile to butt tightly to vertical surfaces, permanent fixtures, and built-in furniture including cabinets, pipes, outlets, edgings, thresholds, and nosings. Bind or seal cut edges as recommended by carpet tile manufacturer.

E. Extend carpet tile into toe spaces, door reveals, closets, open-bottomed obstructions, removable flanges, alcoves, and similar openings.

F. Maintain reference markers, holes, and openings that are in place or marked for future cutting by repeating on finish flooring as marked on subfloor. Use nonpermanent, nonstaining marking device.

G. Install pattern parallel to walls and borders.

3.4 CLEANING AND PROTECTION

A. Perform the following operations immediately after installing carpet tile:

1. Remove excess adhesive, seam sealer, and other surface blemishes using cleaner recommended by carpet tile manufacturer.
2. Remove yarns that protrude from carpet tile surface.
3. Vacuum carpet tile using commercial machine with face-beater element.

B. Protect installed carpet tile to comply with CRI 104, Section 16, "Protecting Indoor Installations."

C. Protect carpet tile against damage from construction operations and placement of equipment and fixtures during the remainder of construction period. Use protection methods indicated or recommended in writing by carpet tile manufacturer.

END OF SECTION 096813

SECTION 097200 – WALL COVERINGS

PART 1 - GENERAL

1.1 RELATED DOCUMENTS

A. Drawings and general provisions of the Contract, including General and Supplementary Conditions and Division 01 Specification Sections, apply to this Section.

1.2 SUMMARY

A. Section Includes:

1. Graphic vinyl wall covering

B. Related Requirements:

1. Division 9 Section “Gypsum Board Assemblies” for gypsum wall board.

1.3 PREINSTALLATION MEETINGS

A. Preinstallation Conference: Conduct conference at Project site.

1.4 SUBMITTALS

A. Product Data: For each type of product.

1. Include data on physical characteristics, durability, fade resistance, and fire-test-response characteristics.

B. Shop Drawings: Show location and extent of each wall-covering type. Indicate pattern placement seams and termination points.

C. Samples: For each type of wall covering and for each color, pattern, texture, and finish specified, including custom-strike offs samples for architect’s approval for graphic wallcovering, full width by 36-inch long in size.

1.5 INFORMATIONAL SUBMITTALS

A. Qualification Data: For testing agency.

B. Product Test Reports: For each wall covering, for tests performed by a qualified testing agency.

1.6 CLOSEOUT SUBMITTALS

A. Maintenance Data: For wall coverings to include in maintenance manuals.

1.7 MAINTENANCE MATERIAL SUBMITTALS

A. Furnish extra materials, from the same product run, that match products installed and that are packaged with protective covering for storage and identified with labels describing contents.

1. Wall-Covering Materials: For each type, color, texture, and finish, full width by length to equal to 5 percent of amount installed.

1.8 QUALITY ASSURANCE

A. Mockups: Build mockups to verify selections made under Sample submittals and to demonstrate aesthetic effects and to set quality standards for installation.

1. Build mockups for each type of wall covering on each substrate required. Comply with requirements in ASTM F 1141 for appearance shading characteristics.
2. Approval of mockups does not constitute approval of deviations from the Contract Documents contained in mockups unless Architect specifically approves such deviations in writing.
3. Subject to compliance with requirements, approved mockups may become part of the completed Work if undisturbed at time of Substantial Completion.

1.9 FIELD CONDITIONS

A. Environmental Limitations: Do not deliver or install wall coverings until spaces are enclosed and weathertight, wet work in spaces is complete and dry, work above ceilings is complete, and temporary HVAC system is operating and maintaining ambient temperature (65 to 85 deg F) and humidity conditions at levels (not more than 50 percent) intended for occupants after Project completion during the remainder of the construction period.

B. Wall Conditions: Gypsum board finish shall be completed to comply with AWCI Specification, Level 4 or higher. See Manufacturer’s Installation Instructions for additional details.

C. Lighting: Do not install wall covering until lighting that matches conditions intended for occupants after Project completion is provided on the surfaces to receive wall covering.

D. Ventilation: Provide continuous ventilation during installation and for not less than the time recommended by wall-covering manufacturer for full drying or curing.

PART 2 - PRODUCTS

2.1 PERFORMANCE REQUIREMENTS

A. Low-Emitting Materials: Wall-covering system shall comply with the testing and product requirements of the California Department of Public Health's (formerly, the California

Department of Health Services') "Standard Method for the Testing and Evaluation of Volatile Organic Chemical Emissions from Indoor Sources Using Environmental Chambers."

B. Fire-Test-Response Characteristics: As determined by testing identical wall coverings applied with identical adhesives to substrates according to test method indicated below by a qualified testing agency. Identify products with appropriate markings of applicable testing agency.

1. Surface-Burning Characteristics: Comply with ASTM E 84; testing by a qualified testing agency. Identify products with appropriate markings of applicable testing agency.

   a. Flame-Spread Index: 25 or less.
   b. Smoke-Developed Index: 45 or less.

2. Fire-Growth Contribution: No flashover and heat and smoke release according to NFPA 265

2.2 GRAPHIC VINYL WALL COVERING (GWC)

A. Description: Provide products in rolls from same production run and complying with the following:

1. Manufacturer: Level Digital Wallcovering

   a. WALLCOVERING HAS A MINIMUM 12 WEEK LEAD TIME AFTER APPROVAL OF CUSTOM SCALE/REPEAT.

2. Pattern: Astronomy – Blue Print.
3. Color: Custom. Revise from blues to reds for Colors 2 and 3. Color selection to follow.
4. Scale: Custom. Refer to drawings.
5. Total Weight: 20 oz. excluding coatings.
6. Width: 54 inches
7. Backing: Carta -Textured Type II PVC Wallcovering + WallMax
8. Fiber Content: Polyester/Natural Fiber (Non-PVC & Low VOC)
   1) Recycled Content: 31%
9. Location: D107 Corridor, D110 Corridor, E107 Corridor.

2.3 ACCESSORIES

A. Adhesive: Mildew-resistant, nonstaining, strippable adhesive, for use with specific wall covering and substrate application indicated and as recommended in writing by wall-covering manufacturer.

1. Adhesive shall have a VOC content of 50 g/L or less.
2. Adhesive shall comply with the testing and product requirements of the California Department of Public Health's (formerly, the California Department of Health Services') "Standard Method for the Testing and Evaluation of Volatile Organic Chemical Emissions from Indoor Sources Using Environmental Chambers."

B. Primer/Sealer: Mildew resistant, complying with requirements in Section 099123 "Interior Painting" and recommended in writing by primer/sealer and wall-covering manufacturers for intended substrate.

1. LEVEL WALLCOVERING: Provide premium, pigmented acrylic primer, Roman-PRO 977, as recommended by wallcovering manufacturer. Primer shall dry white with a matte finish.

C. Seam Tape: As recommended in writing by wall-covering manufacturer.

PART 3 - EXECUTION

3.1 EXAMINATION

A. Examine substrates and conditions, with Installer present, for compliance with requirements for levelness, wall plumbness, maximum moisture content, and other conditions affecting performance of the Work.

B. Proceed with installation only after unsatisfactory conditions have been corrected.

3.2 PREPARATION

A. Comply with manufacturer's written instructions for surface preparation.

B. Clean substrates of substances that could impair bond of wall covering, including dirt, oil, grease, mold, mildew, and incompatible primers.

C. Prepare substrates to achieve a smooth, dry, clean, structurally sound surface free of flaking, unsound coatings, cracks, and defects.

1. Moisture Content: Maximum of 7 percent on new plaster, concrete, and concrete masonry units when tested with an electronic moisture meter.
2. Plaster: Allow new plaster to cure. Neutralize areas of high alkalinity. Prime with primer recommended in writing by primer/sealer manufacturer and wall-covering manufacturer.
3. Gypsum Board: Prime with primer as recommended in writing by primer/sealer manufacturer and wall-covering manufacturer.
4. Painted Surfaces: Treat areas susceptible to pigment bleeding.

D. Check painted surfaces for pigment bleeding. Sand gloss, semigloss, and eggshell finish with fine sandpaper.

E. Remove hardware and hardware accessories, electrical plates and covers, light fixture trims, and similar items.

F. Acclimatize wall-covering materials by removing them from packaging in the installation areas not less than 24 hours before installation.

3.3 WALL-COVERING INSTALLATION

A. Comply with wall-covering manufacturers' written installation instructions applicable to products and applications indicated.

B. Cut wall-covering strips in roll number sequence. Change the roll numbers at partition breaks and corners.

C. Install strips in sequential order.

D. Install wall covering without lifted or curling edges and without visible shrinkage.

E. Install seams vertical and plumb at least 6 inches from outside corners and 6 inches from inside corners unless a change of pattern or color exists at corner. Horizontal seams are not permitted.

F. Trim edges and seams for color uniformity, pattern match, and tight closure. Butt seams without overlaps or gaps between strips.

G. Fully bond wall covering to substrate. Remove air bubbles, wrinkles, blisters, and other defects.

3.4 CLEANING

A. Remove excess adhesive at seams, perimeter edges, and adjacent surfaces.

B. Use cleaning methods recommended in writing by wall-covering manufacturer.

C. Replace strips that cannot be cleaned.

D. Reinstall hardware and hardware accessories, electrical plates and covers, light fixture trims, and similar items.

END OF SECTION 097200

SECTION 097723 - FABRIC-WRAPPED PANELS

PART 1 - GENERAL

1.1 RELATED DOCUMENTS

A. Drawings and general provisions of the Contract, including General and Supplementary Conditions and Division 01 Specification Sections, apply to this Section.

1.2 SUMMARY

A. Section includes:

1. Shop-fabricated, fabric-wrapped wall panels.

1.3 ACTION SUBMITTALS

A. Product Data: For each type of fabric facing, panel edge, core material, and mounting indicated.

B. Shop Drawings: For fabric-wrapped wall panels. Include mounting devices and details; details at panel head, base, joints, and corners; and details at ceiling, floor base, and wall intersections. Indicate panel edge and core materials.

1. Include elevations showing panel sizes and direction of fabric weave and pattern matching.

C. Samples for Initial Selection: Contractor shall provide manufacturer's color PDF images of fabric facing material for review & approval. Actual samples are NOT required unless specifically requested by the architect/interior designer.

1.4 INFORMATIONAL SUBMITTALS

A. Coordination Drawings: Elevations and other details, drawn to scale, on which the following items are shown and coordinated with each other, using input from installers of the items involved:

1. Electrical outlets, switches, conduit and thermostats.

B. Product Certificates: For each type of fabric-wrapped wall panel, from manufacturer.

C. Warranty: Sample of special warranty.

1.5 CLOSEOUT SUBMITTALS

A. Maintenance Data: For fabric-wrapped wall panels to include in maintenance manuals. Include fabric manufacturers' written cleaning and stain-removal recommendations.

1.6 QUALITY ASSURANCE

A. Source Limitations: Obtain fabric-wrapped wall panels from single source from single manufacturer.

B. Fire-Test-Response Characteristics: Provide fabric-wrapped wall panels meeting the following as determined by testing identical products by UL or another testing and inspecting agency acceptable to authorities having jurisdiction:

1. Surface-Burning Characteristics: As determined by testing per ASTM E 84.

   a. Flame-Spread Index: 25 or less.
   b. Smoke-Developed Index: 450 or less.

2. Fire Growth Contribution: Meeting acceptance criteria of local code and authorities having jurisdiction when tested according to NFPA 265.

C. Preinstallation Conference: Conduct conference at Project site.

1.7 DELIVERY, STORAGE, AND HANDLING

A. Comply with fabric and fabric-wrapped, wall panel manufacturers' written instructions for minimum and maximum temperature and humidity requirements for shipment, storage, and handling.

B. Deliver materials and panels in unopened bundles and store in a temperature-controlled dry place with adequate air circulation.

1.8 PROJECT CONDITIONS

A. Environmental Limitations: Do not install fabric-wrapped wall panels until spaces are enclosed and weathertight, wet work in spaces is complete and dry, work at and above ceilings is complete, and ambient temperature and humidity conditions are maintained at the levels indicated for Project when occupied for its intended use.

B. Lighting: Do not install fabric-wrapped wall panels until a permanent level of lighting is provided on surfaces to receive fabric-wrapped wall panels.

C. Air-Quality Limitations: Protect fabric-wrapped wall panels from exposure to airborne odors such as tobacco smoke and install panels under conditions free from odor contamination of ambient air.

D. Field Measurements: Verify locations of fabric-wrapped wall panels and actual dimensions of openings and penetrations by field measurements before fabrication.

1.9 WARRANTY

A. Special Warranty: Manufacturer's standard form in which manufacturer agrees to repair or replace components of fabric-wrapped wall panels that fail in materials or workmanship within specified warranty period.

1. Failures include, but are not limited to, the following:

a. Fabric sagging, distorting, or releasing from panel edge.
b. Warping of core.

2. Warranty Period: 2 years from date of Substantial Completion.

PART 2 - PRODUCTS

2.1 FABRIC-WRAPPED WALL PANELS

A. Manufacturers: Subject to compliance with requirements, available manufacturers offering products that may be incorporated into the Work include, but are not limited to, the following:

1. Basis of Design:

a. Sound Seal.

2. Approved Manufacturers:

a. Acoustical Solutions
b. Acoustical Surfaces
c. Essi Corp.
d. Kinetics Noise Control, Inc.
e. MBI Products Company, Inc.
f. Sound Concepts.
g. Wall Technology, Inc.; an Owens Corning Company.

B. General Requirements for Fabric-Wrapped Wall Panels: Panels shall comply with the testing and product requirements of the California Department of Health Services' "Standard Practice for the Testing of Volatile Organic Emissions from Various Sources Using Small-Scale Environmental Chambers."

C. Fabric-Wrapped Wall Panels: Manufacturer’s standard panel construction consisting of facing material stretched over front face of edge-framed core and bonded or attached to edges and back of frame. 2-inch-thick rigid fiberglass board with a density of 6pcf. Panel edges shall be hardened with resin.

1. Basis of Design:

    a. Sound Seal S-2000.

2. Facing Material: Manufacturer's standard woven polyester fabric from same dye lot;
3. Nominal Core Density: 6 to 7 lbs./cu. ft.
4. Nominal Overall Panel Thickness: 2 inches.
5. Noise Reduction Coefficient: Not less than NRC 1.15 for Type A mounting, per ASTM C423.
6. Panel Width: As indicated on the Drawings.
7. Panel Height: As indicated on the Drawings.
8. Edge Detail: Square.
9. Corner Detail: Square.
10. Fabric: Guilford of Maine, FR701, Style 2100.
11. Color: As selected by Architect from manufacturer’s full range of colors.
12. Mounting: Back-mounted with manufacturer's standard adhesive and impaling clips secured to substrate.

D. Back-Mounted, High-Impact Wall Acoustical Wall Panels (Gymnasium application only): Manufacturer's standard panel construction consisting of facing material laminated to front face, edges, and back border of dimensionally stable, rigid glass- fiber board core; with edges being impact resistant to reinforce panel perimeter against warpage and damage; and complying with the following requirements.

1. Basis of Design:

    a. Sound Seal, No. S-4000.

2. Facing Material: Manufacturer's standard woven polyester fabric from same dye lot.
3. Nominal Core Density: 6 to 7 lb/cu. ft.
4. Nominal Overall Panel Thickness: 2-1/16 inch
5. Noise Reduction Coefficient: Not less than NRC 1.05
5. Panel Width: As indicated on the Drawings.
6. Panel Height: As indicated on the Drawings.
7. Edge Detail: Square.
8. Corner Detail: Square.
2. Fabric: Guilford of Maine, FR701, Style 2100.
3. Color: As selected by Architect from manufacturer’s full range of colors.
4. Mounting: Back-mounted with manufacturer's standard adhesive and impaling clips secured to substrate.

E. Barrel Wall Diffusers: Manufacturer’s standard panel construction consisting of facing material laminated to front face, edges, and back border of dimensionally stable fiberglass reinforced gypsum, with edges being impact resistant to reinforce paned perimeter against warpage and damage; and complying with the following requirements:

1. Basis of Design:

    a. Sound Seal, No. Barrel Shaped Sound Diffusers.

2. Facing Material: Manufacturer's standard woven polyester fabric from same dye lot.
3. Nominal Core Density: 6 to 7 lb/cu. ft.
4. Nominal Overall Panel Thickness: 2-1/16 inch
5. Noise Reduction Coefficient: Not less than NRC 1.05
6. Panel Width: As indicated on the Drawings.
7. Panel Height: As indicated on the Drawings.
8. Edge Detail: Square.
9. Corner Detail: Square.
10. Fabric: Guilford of Maine, FR701, Style 2100.
11. Color: As selected by Architect from manufacturer’s full range of colors.
12. Mounting: Back-mounted with manufacturer's standard adhesive and impaling clips secured to substrate.

2.2 FABRICATION

A. General: Use manufacturer's standard construction except as otherwise indicated; with facing material applied to face, edges, and back border of dimensionally stable core; and with rigid edges to reinforce panel perimeter against warpage and damage.

B. Core-Face Layer: Evenly stretched over core face and edges and securely attached to core; free from puckers, ripples, wrinkles, or sags.

C. Facing Material and Lining Material: Apply fabric fully covering visible surfaces of panel; with material stretched straight, on the grain, tight, square, and free from puckers, ripples, wrinkles, sags, blisters, seams, adhesive, or other visible distortions or foreign matter.

1. Square Corners: Tailor corners. Heat seal vinyl fabric seams at corners.
2. Radius and Other Non-Square Corners: Attach material so there are no seams or gathering of material.
3. Fabrics with Directional or Repeating Patterns or Directional Weave: Mark fabric top and attach fabric in same direction so pattern or weave matches in adjacent panels.

D. Dimensional Tolerances of Finished Panels: Plus or minus 1/16 inch for the following:

1. Thickness.
2. Edge straightness.
3. Overall length and width.
4. Squareness from corner to corner.
5. Chords, radii, and diameters.

PART 3 - EXECUTION

3.1 EXAMINATION

A. Examine fabric, fabricated panels, substrates, areas, and conditions, for compliance with requirements, installation tolerances, and other conditions affecting performance of fabric-wrapped wall panels.

B. Proceed with installation only after unsatisfactory conditions have been corrected.

3.2 INSTALLATION

A. Install fabric-wrapped wall panels in locations indicated with vertical surfaces and edges plumb, top edges level and in alignment with other panels, faces flush, and scribed to fit adjoining work accurately at borders and at penetrations.

B. Comply with fabric-wrapped, wall panel manufacturer's written instructions for installation of panels using type of mounting devices indicated. Mount panels securely to supporting substrate.

C. Align and level fabric pattern and grain among adjacent panels.

3.3 INSTALLATION TOLERANCES

A. Variation from Plumb and Level: Plus or minus.

B. Variation of Panel Joints from Hairline: Not more than 1/16 inch wide.

3.4 CLEANING

A. Clip loose threads; remove pills and extraneous materials.

B. Clean panels on completion of installation to remove dust and other foreign materials according to manufacturer's written instructions.

END OF SECTION 097723

SECTION 098436 - SOUND-ABSORBING CEILING BAFFLES

PART 1 - GENERAL

1.1 RELATED DOCUMENTS

A. Drawings and general provisions of the Contract, including General and Supplementary Conditions and Division 01 Specification Sections, apply to this Section.

1.2 SUMMARY

A. Section includes:

1. Sound-absorbing ceiling baffles.
2. Exposed grid suspension system.
3. Wire hangers, fasteners, main runners, cross tees, wall angle moldings and accessories.

B. Related Sections include the following:

1. Division 9 Section “Acoustical Panel Ceilings”.

1.3 PREINSTALLATION MEETINGS

A. Preinstallation Conference: Conduct conference at Project site.

1.4 ACTION SUBMITTALS

A. Product Data: For each type of product.

1. Include panel edge, core material, and mounting indicated.

B. Shop Drawings: For unit assembly and installation.

1. Include reflected ceiling plans, elevations, sections, and mounting devices and details.
2. Include details at joints and corners; and details at ceiling intersections and intersections with walls. Indicate panel edge profile and core materials.

C. Samples for Initial Selection: Contractor shall provide manufacturer’s color PDF images of ceiling baffles and suspension system for review & approval. Actual samples are NOT required unless specifically requested by the architect/interior designer.

1.5 INFORMATIONAL SUBMITTALS

A. Coordination Drawings: Reflected ceiling plans and other details, drawn to scale, on which the following items are shown and coordinated with each other, using input from installers of the items involved:

1. Electrical outlets.
2. Suspended ceiling components above ceiling units.
3. Structural members to which suspension devices will be attached.
4. Items penetrating or covered by units including the following:

    a. Lighting fixtures.
    b. Air outlets and inlets.
    c. Speakers.
    d. Alarms.
    e. Sprinklers.
    f. Access panels.

5. Show operation of hinged and sliding components covered by or adjacent to units.

B. Product Certificates: For each type of unit.

C. Sample Warranty: For manufacturer's special warranty.

1.6 CLOSEOUT SUBMITTALS

A. Maintenance Data: For each type of unit to include in maintenance manuals. Include fabric manufacturer's written cleaning and stain-removal instructions.

1.7 QUALITY ASSURANCE

A. Mockups: Build mockups to verify selections made under Sample submittals, to demonstrate aesthetic effects, and to set quality standards for materials, fabrication, and installation.

1. Build mockup of typical ceiling area 96 inches wide by full width of ceiling.
2. Approval of mockups does not constitute approval of deviations from the Contract Documents contained in mockups unless Architect specifically approves such deviations in writing.
3. Subject to compliance with requirements, approved mockups may become part of the completed Work if undisturbed at time of Substantial Completion.

1.8 DELIVERY, STORAGE, AND HANDLING

A. Comply with fabric and unit manufacturers' written instructions for minimum and maximum temperature and humidity requirements for shipment, storage, and handling.

B. Deliver materials and units in unopened bundles and store in a temperature-controlled dry place with adequate air circulation.

1.9 FIELD CONDITIONS

A. Environmental Limitations: Do not install units until spaces are enclosed and weathertight, wet-work in spaces is complete and dry, work at and above ceilings is complete, and ambient temperature and humidity conditions are maintained at the levels indicated for Project when occupied for its intended use.

B. Lighting: Do not install units until a permanent level of lighting than 50 fc is provided on surfaces to receive the units.

C. Air-Quality Limitations: Protect units from exposure to airborne odors, such as tobacco smoke, and install units under conditions free from odor contamination of ambient air.

D. Field Measurements: Verify unit locations and actual dimensions of openings and penetrations by field measurements before fabrication, and indicate them on Shop Drawings.

1.10 WARRANTY

A. Special Warranty: Manufacturer agrees to repair or replace units and components that fail in materials or workmanship within specified warranty period.

1. Failures include, but are not limited to, the following:

a. Acoustical performance.
b. Warping of core.

2. Warranty Period: Two years from date of Substantial Completion.

PART 2 - PRODUCTS

2.1 MANUFACTURERS

A. Source Limitations: Obtain ceiling units specified in this Section from single source from single manufacturer.

1. Basis of Design:

a. Armstrong World Industries Inc.

1) Full Line Sales Manager – Central PA
2) Ben Hinkle (bmhinkle@armstrongceilings.com /+1 717-719-3764)

2.2 PERFORMANCE REQUIREMENTS

A. Fire-Test-Response Characteristics: Units shall comply with "Surface-Burning Characteristics" or "Fire Growth Contribution" Subparagraph below, or both, as determined by testing identical products by UL or another testing and inspecting agency acceptable to authorities having jurisdiction:

1. Surface-Burning Characteristics: Comply with ASTM E84 or UL 723; testing by a qualified testing agency. Identify products with appropriate markings of applicable testing agency.

    a. Flame-Spread Index: 25 or less.
    b. Smoke-Developed Index: 450 or less.

2. Fire Growth Contribution: Comply with acceptance criteria of local code and authorities having jurisdiction when tested according to NFPA 286.

2.3 SOUND-ABSORBING CEILING BAFFLES

A. Sound-Absorbing Baffle Panel: Manufacturer's standard panel construction consisting of facing material laminated to front and back faces, edges and top of core.

1. Product: SoundScape Blades.
2. Model:
    a. 8250F03RH07 – 16 x 94 x 2” Rectangle.
    b. 8250F03RH08 – 16 x 46 x 2” Rectangle.
    c. Custom – 16 x 72 x 2” Rectangle.
    d. Custom – 16x 24 x 2" Rectangle.
3. Panel Shape: Flat.
4. Core: Fiberglass.
5. Thickness: 2 inches.
6. Facing Material: DuraBrite® scrim on face, sides and top edge.
7. Surface Texture: Fine.
8. Color: Custom to match Sherwin Williams paint color.
    a. A maximum of (2) color shall be utilized. Refer to Reflected Ceiling Plans for locations.
9. Dimensional Stability: HumiGuard Plus; Anti-Microbial, inherent.
10. Edge Construction: Manufacturer's standard.
11. Edge Profile: Square.
12. Corner Detail in Elevation: Square with continuous edge profile indicated.
13. Recycled Content: 43 percent.
14. Acoustical Performance: Sound absorption NRC of 0.50 to 0.90 according to ASTM C423 for Type J mounting according to ASTM E795.
15. Panel Width: As indicated on Drawings.
16. Panel Height: 16 inches.
17. Mounting: Top-edge embedded hanging clips. with manufacturer's standard suspension system secured to substrate.

2.4 MATERIALS

A. Core Materials: Manufacturer's standard.

1. Glass-Fiber Board: ASTM C612; of type standard with manufacturer; nominal density of 6 to 7 lb/cu. ft., unfaced, and dimensionally stable, molded rigid board; and with maximum flame-spread and smoke-developed indexes of 25 and 50, respectively.

B. Mounting Devices: Concealed on top edge of unit, recommended by manufacturer to support weight of unit.

2.5 METAL SUSPENSION SYSTEMS

A. Direct-to-Grid Suspension:

1. 360° Painted.
   a. 12’ HD Main Beam: 730136.
   b. 4’ Cross Tee: XL734036.
   c. 2’ Cross Tee: XL732036.
   d. 12’ Angle Molding: 780036.
   e. Color: Black (BL).

B. Wire for Hangers and Ties: ASTM A 641, Class 1 zinc coating, soft annealed, with a yield stress load of at least time three design load, but not less than 12 gauge.

C. Accessories:
   1. Adjustable Hanger Bracket: ARBRKT.
   1. Rigid Attachment Clip: 6459BL Black.
   2. Single Tee Adapter Clip: STAC

2.6 FABRICATION

A. Standard Construction: Use manufacturer's standard construction unless otherwise indicated, with facing material applied to face, edges, and back border of dimensionally stable core and with rigid edges to reinforce panel perimeter against warpage and damage.

B. Measure each area and establish layout of panels and joints of sizes indicated on Drawings within a given area.

C. Dimensional Tolerances of Finished Units: Plus or minus 1/16 inch for the following:

1. Thickness.
2. Edge straightness.
3. Overall length and width.
4. Squareness from corner to corner.
5. Chords, radii, and diameters.

PART 3 - EXECUTION

3.1 EXAMINATION

A. Examine fabric, fabricated units, substrates, areas, and conditions for compliance with requirements, installation tolerances, and other conditions affecting unit performance.

B. Proceed with installation only after unsatisfactory conditions have been corrected.

3.2 INSTALLATION

A. Install units in locations indicated. Unless otherwise indicated, install units with edges in alignment with walls and other units, faces flush, and scribed to fit adjoining work accurately at borders and at penetrations.

B. Comply with manufacturer's written instructions for installation of units using type of mounting devices indicated. Mount units securely to supporting substrate.

3.3 INSTALLATION TOLERANCES

A. Variation from Alignment with Surfaces: Plus or minus 1/16 inch in 48 inches, noncumulative.

B. Variation from Level or Slope: Plus or minus 1/16 inch.

C. Variation of Joint Width: Not more than 1/16 inch wide from hairline in 48 inches, noncumulative.

3.4 CLEANING

A. Clean panels on completion of installation to remove dust and other foreign materials according to manufacturer's written instructions.

END OF SECTION 098436

SECTION 099123 – PAINTING

PART 1 - GENERAL

1.1 RELATED DOCUMENTS

A. Drawings and general provisions of the Contract, including General and Supplementary Conditions and Division 1 Specification Sections, apply to this Section.

1.2 SUMMARY

A. This Section includes surface preparation and field painting of interior items and surfaces.

1. Surface preparation, priming, and finish coats specified in this Section are in addition to shop priming and surface treatment specified in other Sections.

B. Paint exposed surfaces, except where these Specifications indicate that the surface or material is not to be painted or is to remain natural. If an item or a surface is not specifically mentioned, paint the item or surface the same as similar adjacent materials or surfaces. If a color of finish is not indicated, Architect will supply a color selection.

1. Painting includes field painting of exposed bare and covered pipes and ducts (including color coding), hangers, exposed steel and iron supports, and surfaces of mechanical and electrical equipment that do not have a factory-applied final finish.

C. Do not paint prefinished items, concealed surfaces, finished metal surfaces, operating parts, and labels.

1. Prefinished items include the following factory-finished components:

a. Architectural woodwork.
b. Acoustical wall panels.
c. Metal lockers.
d. Elevator entrance doors and frames.
e. Elevator equipment.
f. Light fixtures.

2. Concealed surfaces include walls or ceilings in the following generally inaccessible spaces:

a. Foundation spaces.
b. Furred areas.
c. Ceiling plenums.
d. Utility tunnels.
e. Pipe spaces.
f. Duct shafts.
g. Elevator shafts.

3. Finished metal surfaces include the following:

a. Anodized aluminum.
b. Stainless steel.

c. Chromium plate.
d. Copper and copper alloys.
e. Bronze and brass.

4. Operating parts include moving parts of operating equipment and the following:

a. Valve and damper operators.
b. Linkages.
c. Sensing devices.
d. Motor and fan shafts.

5. Labels: Do not paint over UL, FMG, or other code-required labels or equipment name, identification, performance rating, or nomenclature plates.

D. Related Requirements:

1. Division 2 Section "Cement Concrete Pavement" for traffic-marking paint.
2. Division 5 Sections for shop priming of metal substrates with primers specified in this Section.
3. Division 5 Section "Structural Steel" for shop priming structural steel.
4. Division 5 Section "Metal Fabrications" for shop priming ferrous metal.
5. Division 6 Section "Architectural Woodwork" for shop priming interior architectural woodwork.
6. Division 8 Section " Hollow Metal Doors and Frames" for factory priming steel doors and frames.
7. Division 9 Section "Gypsum Board Assemblies" for surface preparation of gypsum board.

1.3 DEFINITIONS

A. General: Standard coating terms defined in ASTM D 16 apply to this Section.

1. Flat refers to a lusterless or matte finish with a gloss range below 15 when measured at an 85-degree meter.
2. Eggshell refers to low-sheen finish with a gloss range between 20 and 35 when measured at a 60-degree meter.
3. Semigloss refers to medium-sheen finish with a gloss range between 35 and 70 when measured at a 60-degree meter.
4. Full gloss refers to high-sheen finish with a gloss range more than 70 when measured at a 60-degree meter.

1.4 SUBMITTALS

A. Product Data: For each paint system indicated. Include block fillers and primers.

1. Material List: An inclusive list of required coating materials. Indicate each material and cross-reference specific coating, finish system, and application. Identify each material by manufacturer's catalog number and general classification. Submit in same format as specification.
2. Manufacturer's Information: Manufacturer's technical information, including label analysis and instructions for handling, storing, and applying each coating material.

3. Certification by the manufacturer that products supplied comply with local regulations controlling use of volatile organic compounds (VOC's).

B. Colors: Match Architect's color selections.

C. Samples for Verification: For each color and material to be applied, with texture to simulate actual conditions, on representative Samples of the actual substrate.

1. Submit 4 sets of samples of each final color and finish.

D. Qualification Data: For firms and persons specified in the "Quality Assurance" Article to be demonstrate their capabilities and experience. Include lists of completed projects with project names and addresses, names and addresses of architects and owners, and other information specified.

E. Certifications:

1. Furnish a letter from the paint manufacturer or their factory representative certifying that the paint system proposed for this project are equal to or better than the specified systems in appearance and performance levels. Submit proof of equivalency for approval including generic type, descriptive information, VOC content, performance data, solids by volume, and recommended film thickness. Submittals not accompanied by this certification will be returned, "REJECTED."

F. Coating Maintenance Manual: Upon conclusion of the project, the Contractor or paint manufacturer/supplier shall furnish a coating maintenance manual, such as Sherwin-Williams "Custodian Project Color and Product Information" report or equal. Manual shall include an Area Summary with finish schedule, Area Detail designating where each product/color/finish was used, product data pages, Material Safety Data Sheets, care and cleaning instructions, touch-up procedures, and color samples of each color and finish used.

1.5 QUALITY ASSURANCE

A. Applicator Qualifications: A firm or individual experienced in applying paints and coatings similar in material, design, and extent to those indicated for this Project, whose work has resulted in applications with a record of successful in-service performance.

B. Source Limitations: Obtain block fillers and primers for each coating system from the same manufacturer as the finish coats.

C. Benchmark Samples (Mockups): Provide a full-coat benchmark finish sample for each type of coating and substrate required. Comply with procedures specified in PDCA P5. Duplicate finish of approved sample Submittals.

1. Architect will select one room or surface to represent surfaces and conditions for application of each type of coating and substrate.

a. Provide mock up of first and second coats of block filler or primer for approval of application.
b. Wall Surfaces: Provide samples on at least 100 sq. ft.
c. Small Areas and Items: Architect will designate items or areas required.

D. Apply benchmark samples, according to requirements for the completed Work, after permanent lighting and other environmental services have been activated. Provide required sheen, color, and texture on each surface. Where materials are being applied over previously painted surfaces, apply mock up samples and perform field testing to check for compatibility, adhesion, and film integrity of the new materials to existing painted surfaces. Report in writing any condition that may affect application, appearance, or performance of the specified coating system.

1. After finishes are accepted, Architect will use the room or surface to evaluate coating systems of a similar nature.
2. Final approval of colors will be from benchmark samples.

1.6 DELIVERY, STORAGE, AND HANDLING

A. Deliver materials to Project site in manufacturer's original, unopened packages and containers bearing manufacturer's name and label and the following information:

1. Product name or title of material.
2. Product description (generic classification or binder type).
3. Manufacturer's stock number and date of manufacture.
4. Contents by volume, for pigment and vehicle constituents.
5. Thinning instructions.
6. Application instructions.
7. Color name and number.
8. VOC content.

B. Store materials not in use in tightly covered containers in a well-ventilated area at a minimum ambient temperature of 45 deg F. Maintain storage containers in a clean condition, free of foreign materials and residue.

1. Protect from freezing. Keep storage area neat and orderly. Remove oily rags and waste daily.

C. Take necessary measures to ensure that workers and work areas are protected from fire and health hazards resulting from handling, mixing, and application.

1.7 PROJECT CONDITIONS

A. Apply waterborne paints only when temperatures of surfaces to be painted and surrounding air are between 50 and 90 deg F.

B. Apply solvent-thinned paints only when temperatures of surfaces to be painted and surrounding air are between 45 and 95 deg F.

C. Do not apply paint in snow, rain, fog, or mist; or when relative humidity exceeds 85 percent; or at temperatures less than 5 deg F above the dew point; or to damp or wet surfaces.

1. Painting may continue during inclement weather if surfaces and areas to be painted are enclosed and heated within temperature limits specified by manufacturer during application and drying periods.

1.8 EXTRA MATERIALS

A. Furnish extra paint materials from the same production run as the materials applied and in the quantities described below. Package with protective covering for storage and identify with labels describing contents. Deliver left-over paint materials to Owner.

1. Quantity: Furnish Owner with extra paint materials in quantities indicated below:

a. Interior: (1) case of each color and type applied.

PART 2 - PRODUCTS

2.1 MANUFACTURERS

A. Available Products: Subject to compliance with requirements, provide products from one of the following manufacturers. Sherwin-Williams is the basis of design and establishes the standard of quality required.

B. Manufacturers' Names:

1. Sherwin Williams (SW).
2. Glidden.
3. PPG.
4. Benjamin Moore.

2.2 PAINT MATERIALS, GENERAL

A. Material Compatibility: Provide block fillers, primers, and finish-coat materials that are compatible with one another and with the substrates indicated under conditions of service and application, as demonstrated by manufacturer based on testing and field experience. Each system should be from the same manufacturer.

B. Material Quality: Provide manufacturer's best-quality paint material of the various coating types specified that are factory formulated and recommended by manufacturer for application indicated. Paint-material containers not displaying manufacturer's product identification will not be acceptable.

1. Proprietary Names: Use of manufacturer's proprietary product names to designate colors or materials is not intended to imply that products named are required to be used to the exclusion of equivalent products of other manufacturers. Furnish manufacturer's material data and certificates of performance for proposed substitutions.

C. Colors: Match Architect's samples.

PART 3 - EXECUTION

3.1 EXAMINATION

A. Examine substrates, areas, and conditions, with Applicator present, for compliance with requirements for paint application. Comply with procedures specified in PDCA P4.

1. Proceed with paint application only after unsatisfactory conditions have been corrected and surfaces receiving paint are thoroughly dry.
2. Start of painting will be construed as Applicator's acceptance of surfaces and conditions within a particular area.

B. Coordination of Work: Review other Sections in which primers are provided to ensure compatibility of the total system for various substrates. On request, furnish information on characteristics of finish materials to ensure use of compatible primers.

1. Notify Architect about anticipated problems when using the materials specified over substrates primed by others.

C. Where materials are being applied over previously painted surfaces, apply mock up samples and perform field testing to check for compatibility, adhesion, and film integrity of the new materials to existing painted surfaces. Report in writing any condition that may affect application, appearance, or performance of the specified coating system.

3.2 PREPARATION

A. General: Remove hardware and hardware accessories, plates, machined surfaces, lighting fixtures, and similar items already installed that are not to be painted. If removal is impractical or impossible because of size or weight of the item, provide surface-applied protection before surface preparation and painting.

1. After completing painting operations in each space or area, reinstall items removed using workers skilled in the trades involved.

B. Cleaning: Before applying paint or other surface treatments, clean substrates of substances that could impair bond of the various coatings. Remove oil and grease before cleaning. All surfaces must be clean, dry, and free of all oil, grease, surface contaminants, and substances that could impair adhesion.

1. Schedule cleaning and painting so dust and other contaminants from the cleaning process will not fall on wet, newly painted surfaces.

2. All previously coated surfaces shall clean, dry, dull, and in sound condition prior to coating. All loose paints (either visible or not) shall be removed to expose a sound surface for repainting. All smooth, glossy surfaces shall be abraded to impart a surface profile that will promote adhesion of the subsequent coating system. A test-patch shall be applied prior to a full installation to assure adequate adhesion will be achieved.

C. Surface Preparation: Clean and prepare surfaces to be painted according to manufacturer's written instructions for each particular substrate condition and as specified.

1. Provide barrier coats over incompatible primers or remove and reprime.
2. Cementitious Materials: Prepare concrete, concrete unit masonry, cement plaster, and mineral-fiber-reinforced cement panel surfaces to be painted. Remove efflorescence, chalk, dust, dirt, grease, oils, and release agents. Roughen as required to remove glaze.

If hardeners or sealers have been used to improve curing, use mechanical methods of surface preparation.

a. Use abrasive blast-cleaning methods if recommended by paint manufacturer.
b. Determine alkalinity and moisture content of surfaces by performing appropriate tests. If surfaces are sufficiently alkaline to cause the finish paint to blister and burn, correct this condition before application. Do not paint surfaces if moisture content exceeds that permitted in manufacturer's written instructions.

3. For Concrete Floors:
   a. Surface must be clean, dry, and in sound condition. Remove stains, oil, dust, grease, dirt, rust, release agents, curing compounds and hardeners, salts, efflorescence, laitance, and other contaminants and foreign material to ensure adequate adhesion.
   b. Follow recommendations as listed in the Sherwin Williams / General Polymers G-1 Surface Preparation Guide and ICRI Guideline #310-2-1997 for surface preparation.
   c. Provide Concrete Surface Profile (CSP) as recommended by manufacturer for specified systems.
   d. Determine alkalinity and moisture content of surfaces by performing appropriate tests. Document results in writing to GC and architect.

4. Wood: Clean surfaces of dirt, oil, and other foreign substances with scrapers, mineral spirits, and sandpaper, as required. Sand surfaces exposed to view smooth and dust off.
   a. Scrape and clean small, dry, seasoned knots, and apply a thin coat of white shellac or other recommended knot sealer before applying primer. After priming, fill holes and imperfections in finish surfaces with putty or plastic wood filler. Sand smooth when dried.
      1) Existing Wood: Scuff-sand/mechanically abrade the existing finish to impart a surface profile followed by thorough cleaning with a commercial cleaner/degreaser to remove all surface contaminants and rinse thoroughly.
   b. Prime, stain, or seal wood to be painted immediately on delivery. Prime edges, ends, faces, undersides, and back sides of wood, including cabinets, counters, cases, and paneling.
   c. If transparent finish is required, back-prime with spar varnish.
   d. Back-prime paneling on interior partitions where masonry, plaster, or other wet wall construction occurs on back side.
   e. Seal tops, bottoms, and cutouts of unprimed wood doors with a heavy coat of varnish or sealer immediately on delivery.

5. Ferrous Metals: Clean ungalvanized ferrous-metal surfaces that have not been shop coated; remove oil, grease, dirt, loose mill scale, and other foreign substances. Use solvent or mechanical cleaning methods that comply with SSPC's recommendations.
   a. Power Tool Clean steel surfaces clean as recommended by paint system manufacturer and according to SSPC-SP 3.
   b. Treat bare and sandblasted or pickled clean metal with a metal treatment wash coat before priming.

c. Touch up bare areas and shop-applied prime coats that have been damaged. Wire-brush, clean with solvents recommended by paint manufacturer, and touch up with same primer as the shop coat.

6. Galvanized Surfaces: Clean galvanized surfaces with nonpetroleum-based solvents so surface is free of oil and surface contaminants. Remove pretreatment from galvanized sheet metal fabricated from coil stock by mechanical methods.
7. Interior Grilles, Louvers and Sprinkler Escutcheons shall be painted in the field to match adjacent material color. Contractor shall prep and prime factory finished items to receive new paint finish in the field.
8. Ceramic Tile: Thoroughly clean surfaces with a non-hydrocarbon containing commercial cleaner/ degreaser to remove all dirt, grease, cleaning agents and contaminants and rinse thoroughly. Mechanically abrade or scarify the surface of the surface to impart a surface profile that will promote the adhesion of the coating system. Remove all dust and foreign contaminants. **Note: Mock-Up or test patch is required to ensure adequate adhesion is achieved. Test for adhesion per ASTM-D3359 is required prior to installation of this system after 30 days of curing. Provide a report with results.*

D. Material Preparation: Mix and prepare paint materials according to manufacturer's written instructions.

1. Maintain containers used in mixing and applying paint in a clean condition, free of foreign materials and residue.
2. Stir material before application to produce a mixture of uniform density. Stir as required during application. Do not stir surface film into material. If necessary, remove surface film and strain material before using.
3. Use only thinners approved by paint manufacturer and only within recommended limits.

E. Tinting: Tint each undercoat a lighter shade to simplify identification of each coat when multiple coats of same material are applied. Tint undercoats to match the color of the finish coat, but provide sufficient differences in shade of undercoats to distinguish each separate coat.

3.3 APPLICATION

A. General: Apply paint according to manufacturer's written instructions. Use applicators and techniques best suited for substrate and type of material being applied.

1. Paint colors, surface treatments, and finishes are indicated in the paint schedules.
2. Do not paint over dirt, rust, scale, grease, moisture, scuffed surfaces, or conditions detrimental to formation of a durable paint film.
3. Provide finish coats that are compatible with primers used.
4. The term "exposed surfaces" includes areas visible when permanent or built-in fixtures, grilles, convector covers, covers for finned-tube radiation, and similar components are in place. Extend coatings in these areas, as required, to maintain system integrity and provide desired protection.
5. Paint surfaces behind movable equipment and furniture the same as similar exposed surfaces. Before final installation of equipment, paint surfaces behind permanently fixed equipment or furniture with prime coat only.
6. Paint interior surfaces of ducts with a flat, nonspecular black paint where visible through registers or grilles.

7. Paint back sides of access panels and removable or hinged covers to match exposed surfaces.
8. Finish exterior doors on tops, bottoms, and side edges the same as exterior faces.
9. Finish interior of wall and base cabinets and similar field-finished casework to match exterior.
10. Sand lightly between each succeeding enamel or varnish coat.

B. Scheduling Painting: Apply first coat to surfaces that have been cleaned, pretreated, or otherwise prepared for painting as soon as practicable after preparation and before subsequent surface deterioration.

1. The number of coats and film thickness required are the same regardless of application method. Do not apply succeeding coats until previous coat has cured as recommended by manufacturer. If sanding is required to produce a smooth, even surface according to manufacturer's written instructions, sand between applications.
2. Omit primer over metal surfaces that have been shop primed and touchup painted.
3. If undercoats, stains, or other conditions show through final coat of paint, apply additional coats until paint film is of uniform finish, color, and appearance. Give special attention to ensure that edges, corners, crevices, welds, and exposed fasteners receive a dry film thickness equivalent to that of flat surfaces.
4. Allow sufficient time between successive coats to permit proper drying. Do not recoat surfaces until paint has dried to where it feels firm, and does not deform or feel sticky under moderate thumb pressure, and until application of another coat of paint does not cause undercoat to lift or lose adhesion.

C. Application Procedures: Apply paints and coatings by brush, roller, spray, or other applicators according to manufacturer's written instructions.

1. Brushes: Use brushes best suited for type of material applied. Use brush of appropriate size for surface or item being painted.
2. Rollers: Use rollers of carpet, velvet-back, or high-pile sheep's wool as recommended by manufacturer for material and texture required.
3. Spray Equipment: Use airless spray equipment with orifice size as recommended by manufacturer for material and texture required.

D. Minimum Coating Thickness: Apply paint materials no thinner than manufacturer's recommended spreading rate to achieve dry film thickness indicated. Provide total dry film thickness of the entire system as recommended by manufacturer.

E. Mechanical and Electrical Work: Painting of mechanical and electrical work is limited to items exposed in equipment rooms and occupied spaces.

F. Mechanical items to be painted include, but are not limited to, the following:

1. Exposed uninsulated metal piping.
2. Exposed uninsulated plastic piping.
3. Exposed pipe hangers and supports.
4. Tanks that do not have factory-applied final finishes.
5. Visible portions of internal surfaces of metal ducts, without liner, behind air inlets and outlets.

6. Duct, equipment, and pipe insulation having "all-service jacket" or other paintable jacket material.
7. Mechanical equipment that is indicated to have a factory-primed finish for field painting.

G. Electrical items to be painted include, but are not limited to, the following:

1. Switchgear.
2. Panel boards.
3. Electrical equipment that is indicated to have a factory-primed finish for field painting.

H. All interior exposed gypsum wallboard, including any bulkheads and soffits to be painted.

I. All interior ferrous metal to be painted including any lintels, railings, grilles, and louvers (does not include factory or pre-finished items).

J. All hollow metal doors and frames shall be painted.

K. Block Fillers: Apply block fillers to concrete masonry block at a rate to ensure complete coverage with pores filled.

L. Prime Coats: Before applying finish coats, apply a prime coat, as recommended by manufacturer, to material that is required to be painted or finished and that has not been prime coated by others. Recoat primed and sealed surfaces where evidence of suction spots or unsealed areas in first coat appears, to ensure a finish coat with no burn-through or other defects due to insufficient sealing.

M. Pigmented (Opaque) Finishes: Completely cover surfaces as necessary to provide a smooth, opaque surface of uniform finish, color, appearance, and coverage. Cloudiness, spotting, holidays, laps, brush marks, runs, sags, ropiness, or other surface imperfections will not be acceptable.

N. Transparent (Clear) Finishes: Use multiple coats to produce a glass-smooth surface film of even luster. Provide a finish free of laps, runs, cloudiness, color irregularity, brush marks, orange peel, nail holes, or other surface imperfections.

1. Provide satin finish for final coats.

O. Completed Work: Match approved samples for color, texture, and coverage. Remove, refinish, or repaint work not complying with requirements.

P. Marking and Identification: Fire walls, fire barriers, fire partitions, smoke barriers and smoke partitions or any other wall required to have protected openings or penetrations shall be effectively and permanently identified with signs or stenciling. Such identification shall:

1. Be located in accessible concealed floor, floor-ceiling or attic spaces;
2. Be repeated at intervals not exceeding 30 feet measured horizontally along the wall or partition; and
3. Include lettering not less than 0.5 inch in height, incorporating the suggested wording: "FIRE AND/OR SMOKE BARRIER-PROTECT ALL OPENINGS," or other wording.

a. Exception: Walls in Group R-2 occupancies that do not have a removable decorative ceiling allowing access to the concealed space.

3.4 FIELD QUALITY CONTROL

A. Owner reserves the right to invoke the following test procedure at any time and as often as Owner deems necessary during the period when paint is being applied:

1. Owner will engage a qualified independent testing agency to sample paint material being used. Samples of material delivered to Project will be taken, identified, sealed, and certified in the presence of Contractor.
2. Testing agency will perform appropriate tests for the following characteristics as required by Owner:

    a. Quantitative material analysis.
    b. Abrasion resistance.
    c. Apparent reflectivity.
    d. Flexibility.
    e. Washability.
    f. Absorption.
    g. Accelerated weathering.
    h. Dry opacity.
    i. Accelerated yellowness.
    j. Recoating.
    k. Skinning.
    l. Color retention.
    m. Alkali and mildew resistance.

3. Owner may direct Contractor to stop painting if test results show material being used does not comply with specified requirements. Contractor shall remove noncomplying paint from Project site, pay for testing, and repaint surfaces previously coated with the noncomplying paint. If necessary, Contractor may be required to remove noncomplying paint from previously painted surfaces if, on repainting with specified paint, the two coatings are incompatible.

B. Pre-installation Meetings:

1. Schedule a conference and inspection to be held on-site before field application of coating systems begins.
2. Conference shall be attended by Contractor, Owner's representative, Engineer, Construction Manager, coating applicators, and a representative of coating material manufacturer.
3. Topics to be discussed at meeting shall include:

    a. A review of Contract Documents and accepted shop drawings shall be made and deviations or differences shall be resolved.
    b. Review items such as environmental conditions, surface conditions, surface preparation, application procedures, and protection following application.
    c. Establish which areas on-site will be available for use as storage areas and working area

4. Pre-construction conference and inspection shall serve to clarify Contract Documents, application requirements and what work should be completed before coating application can begin.
5. Prepare and submit, to parties in attendance, a written report of pre-installation conference report shall be submitted with 3 days following conference.
6. Field Samples:
    a. Provide a full coating system to the required sheen, color, texture, and recommended coverage rates. Simulate finished lighting conditions for reviewing in-place work.
7. The Architect, Construction Manager or Owners Representative will select one room, area, or combination of areas and surfaces and conditions for each type of coating and substrate to be coated. Apply coatings in this room, area, combination of areas and surfaces according to the schedule, or as specified. After finishes are accepted, this room, area or combination of areas and surfaces will serve as the standard of quality and for evaluation of coating systems of similar nature.
8. A manufacturer's representative shall be available upon request by the General Contractor or Painting subcontractor, to advise applicator on proper application technique and procedures.

3.5 CLEANING

A. Cleanup: At the end of each workday, remove empty cans, rags, rubbish, and other discarded paint materials from Project site.

1. After completing painting, clean glass and paint-spattered surfaces. Remove spattered paint by washing and scraping without scratching or damaging adjacent finished surfaces.

3.6 PROTECTION

A. Protect work of other trades, whether being painted or not, against damage from painting. Correct damage by cleaning, repairing or replacing, and repainting, as approved by Architect.

B. Provide "Wet Paint" signs to protect newly painted finishes. After completing painting operations, remove temporary protective wrappings provided by others to protect their work.

1. After work of other trades is complete, touch up and restore damaged or defaced painted surfaces. Comply with procedures specified in PDCA P1.

3.7 INTERIOR PAINT SCHEDULE

A. Gypsum Board: Provide the following finish systems over interior gypsum board surfaces:

1. Flat Acrylic Finish (Ceiling and Bulkhead Applications): Two finish coats over a primer.
    a. Primer: SW, ProMar 200 Zero VOC Latex Primer, B28W600.
    b. Finish Coast: SW, ProMar 200 Zero VOC Latex Flat, B30W2650 series.
    **Zero VOC, Anti-Microbial, *Product remains Zero VOC when tinted.*
2. Low Luster Acrylic-Enamel Finish (Wall Applications): Two finish coats over a primer.

a. Primer: SW, ProMar 200 Zero VOC Latex Primer, B28W600.
b. Finish Coats: SW, ProMar 200 Zero VOC Latex Eg-Shel, B20W2650 series.
**Zero VOC, Anti-Microbial, *Product remains Zero VOC when tinted.*

B. Previously Painted Gypsum Board: Provide the following finish systems over previously painted interior gypsum board surfaces. **Note: Mock-Up with adhesion test per ASTM-D3359 is required prior to installation of this system.*

1. Flat Acrylic Finish (Ceiling & Bulkhead Applications): Two finish coats over an adhesion promoting primer.

a. Primer: SW, Extreme Bond Interior/Exterior Bonding Primer, B51-150.
b. Finish Coats: SW, ProMar 200 Zero VOC Latex Flat, B30W2650 series.
**Zero VOC, Anti-Microbial, *Product remains Zero VOC when tinted.*

2. Low Luster Acrylic-Enamel Finish (Wall Applications): Two finish coats over an adhesion promoting primer.

a. Primer: SW, Extreme Bond Interior/Exterior Bonding Primer, B51-150.
b. Finish Coats: SW, ProMar 200 Zero VOC Latex Eg-Shel, B20W2650 series.
**Zero VOC, Anti-Microbial, *Product remains Zero VOC when tinted.*

C. Gypsum Board Epoxy Finish (EPX2 @ GWB Walls/Ceilings): Provide the following epoxy finish systems over interior gypsum board surfaces.

1. Eg-Shel Waterbased Epoxy Finish: Two finish coats over a primer.

a. Primer: ProMar 200 Zero VOC Latex Primer, B28W600.
b. Finish Coats: Pro Industrial Waterbased Catalyzed Epoxy Eg-Shel, B73-360 series.

D. Previously Painted Gypsum Board Epoxy Finish (EPX2 @ GWB Walls/Ceilings): Provide the following epoxy finish systems over interior gypsum board surfaces. **Note: Mock-Up with adhesion test per ASTM-D3359 is required prior to installation of this system.*

1. Eg-Shel Waterbased Epoxy Finish: two finish coats over a primer.

a. Primer: SW, Extreme Bond Interior/Exterior Bonding Primer, B51-150.
b. Finish Coats: Pro Industrial Waterbased Catalyzed Epoxy Eg-Shel, B73-360 series.

E. Ferrous Metal: Provide the following finish systems over ferrous metal:

1. Semi-Gloss Finish: Two finish coats over a primer.

a. Primer: SW, Pro-Industrial Pro-Cryl Universal Metal Primer, B66-310 series
b. Finish Coats: SW, Pro-Industrial Waterbased Catalyzed Epoxy Gloss.

F. Previously Painted Ferrous Metal: Provide the following finish systems over previously painted ferrous metal. **Note: Mock-Up with adhesion test per ASTM-D3359 is required prior to installation of this system.*

1. Semi-Gloss Finish: Two finish coats over an adhesion promoting primer.

a. Spot Primer (for bare or rusty areas): SW, Pro-Industrial Pro-Cryl Universal Metal Primer, B66-310 series
b. Primer: SW, Extreme Bond Interior/Exterior Bonding Primer, B51-150.

c. Finish Coats: SW, Pro-Industrial Waterbased Catalyzed Epoxy Gloss.

G. Galvanized Metal: Provide the following finish systems over galvanized metal:

1. Semi-Gloss Finish: two finish coats over a primer.

a. Primer: Pro Industrial Pro-Cryl Universal Metal Primer, B66-310 series
b. Finish Coats: Pro Industrial Waterbased Catalyzed Epoxy Gloss.

H. Previously Painted Galvanized Metal: Provide the following finish systems over previously painted galvanized metal. **Note: Mock-Up with adhesion test per ASTM-D3359 is required prior to installation of this system.*

1. Semi-Gloss Finish: two finish coats over an adhesion promoting primer.

a. Spot Primer (for bare or rusty areas): Pro Industrial Pro-Cryl Universal Metal Primer, B66-310 series
b. Finish Coats: SW, Pro-Industrial Waterbased Catalyzed Epoxy Gloss.

I. Dry Fog Paint: Provide where indicated for painted exposed structure.

1. Provide dry fog paint system according to approved manufacture's recommendations.

a. Primer: SW, Pro-Industrial Pro-Cryl Universal Metal Primer, B66-310 series
*Omit primer on clean galvanized surfaces
b. Finish Coats, SW, Pro-Industrial Waterborne Acrylic Dryfall Flat, B42W81 series

J. Previously Painted Exposed Structure: Provide where indicated for painted exposed structure. **Note: Mock-Up with adhesion test per ASTM-D3359 is required prior to installation of this system.*

1. Two finish coats according to approved manufacture's recommendations.

a. Finish Coats: SW, Pro Industrial Multi-Surface Acrylic.

K. Concrete Masonry Units: Provide the following finish systems over primer for wall applications.

1. Semi-Gloss Finish: Two finish coats over a primer.

a. Filler: SW, PrepRite Block Filler, B25W25.
b. Finish Coats: SW, ProMar 200 Zero VOC Latex Semi-Gloss, B31W2650 series
**Zero VOC, Anti-Microbial, *Product remains Zero VOC when tinted.*

L. Previously Painted Concrete Masonry Units: Provide the following finish systems over an adhesion promoting primer for wall applications. **Note: Mock-Up with adhesion test per ASTM-D3359 is required prior to installation of this system.*

1. Semi-Gloss Finish: Two finish coats over a primer.

a. Primer: SW, Extreme Bond Interior/Exterior Bonding Primer, B51-150.
b. Finish Coats: SW, ProMar 200 Zero VOC Latex Semi-Gloss, B31W2650 series.
**Zero VOC, Anti-Microbial, *Product remains Zero VOC when tinted.*

M. Concrete Masonry Units Eg-Shel Epoxy Finish (EPX1): Provide the following epoxy finish systems over filler for wall applications.

1. Eg-Shel Waterbased Epoxy Finish: Two finish coats over a filler.

   a. Filler: PrepRite Block Filler, B25W25.
   b. Finish Coats: Pro Industrial Waterbased Catalyzed Epoxy Eg-Shel, B73-360 series.

N. Previously Painted Concrete Masonry Units Eg-Shel Epoxy Finish (EPX1): Provide the following epoxy finish systems over previously painted wall applications. **Note: Mock-Up with adhesion test per ASTM-D3359 is required prior to installation of this system.*

1. Eg-Shel Waterbased Epoxy Finish: Two finish coats over an adhesion promoting primer.

   a. Primer: Extreme Bond Interior/Exterior Bonding Primer, B51-150.
   b. Finish Coats: Pro Industrial Waterbased Catalyzed Epoxy Eg-Shel, B73-360.

O. Exiting/New (Bare) Ceramic Tile Epoxy Finish (EPX3): Provide the following epoxy finish systems over adhesion primer for wall applications. **Note: Mock-Up with adhesion test per ASTM-D3359 is required prior to installation of this system.*

1. Eg-Shel Waterbased Epoxy Finish: two finish coats over a adhesion promoting primer.

   a. Primer: Loxon Block Surfacer A24W200 series.
   b. Finish Coats: Pro Industrial Pre Catalyzed Waterbased Epoxy Eg-Shel, K46-150 series.

P. Previously Painted Ceramic Tile Epoxy Finish (EPX3): Provide the following epoxy finish systems over adhesion primer for wall applications. **Note: Mock-Up with adhesion test per ASTM-D3359 is required prior to installation of this system.*

1. Eg-Shel Waterbased Epoxy Finish: two finish coats over a adhesion promoting primer.

   a. Primer: Extreme Bond Interior/Exterior Bonding Primer, B51-150.
   b. Finish Coats: Pro Industrial Pre Catalyzed Waterbased Epoxy Eg-Shel, K46-150 series.

Q. Plaster – Latex System: Provide the following finish systems over interior plaster surfaces:

1. Flat Acrylic Finish (Ceiling & Bulkhead Application): Two finish coats over a primer.

   a. Primer: Loxon Concrete & Masonry primer, A24W8300.
   b. Finish Coats: ProMar 200 Zero VOC Latex Flat, B30W2650 series.

2. Low Luster Acrylic-Enamel Finish (Wall Application): Two finish coats over a primer.

   a. Primer: Loxon Concrete & Masonry primer, A24W8300.
   b. Finish Coats: ProMar 200 Zero VOC Latex Eg-Shel, B20W2650 series.

R. Previously Painted Plaster – Latex System: Provide the following finish systems over interior plaster surfaces. **Note: Mock-Up with adhesion test per ASTM-D3359 is required prior to installation of this system.*

1. Flat Acrylic Finish (Ceiling & Bulkhead Application): Two finish coats over a primer.
   a. Primer: SW, Extreme Bond Interior/Exterior Bonding Primer, B51-150.
   b. Finish Coats: ProMar 200 Zero VOC Latex Flat, B30W2650 series.

2. Low Luster Acrylic-Enamel Finish (Wall Application): Two finish coats over a primer.
   a. Primer: SW, Extreme Bond Interior/Exterior Bonding Primer, B51-150.
   b. Finish Coats: ProMar 200 Zero VOC Latex Eg-Shel, B20W2650 series.

3.8 INTERIOR STAIN AND NATURAL-FINISH SCHEDULE

A. Stain-Finish Woodwork with Sealer: Provide the following stain finish with sealer over new interior woodwork:

1. Waterborne Satin-Varnish Finish: Two finish coats of waterborne clear satin varnish over a sanding sealer. Wipe wood filler before applying stain.
   a. Filler Coat: Minwax, Sanding Sealer – Clear, 65-7000 Series. (Optional as needed)
   b. Stain Coat: Minwax, Wood Finish Water Based Semi-Transparent Color Stain.
   c. Finish Coats: Minwax, Polycrylic Water-Based Protective Finish - Clear, Satin Finish, 133-300 Series.

END OF SECTION 099123

SECTION 099600 - HIGH-PERFORMANCE COATINGS

PART 1 - GENERAL

1.1 RELATED DOCUMENTS

A. Drawings and general provisions of the Contract, including General and Supplementary Conditions and Division 1 Specification Sections, apply to this Section.

1.2 SUMMARY

A. This Section includes the following:

1. Surface preparation.
2. Application of high-performance coating systems for exposed exterior structural steel framing, columns and accessories.

B. Related Sections include the following:

1. Division 5 Section "Structural Steel Framing" for shop priming of structural steel with primers specified in this Section.
2. Division 9 Section “Painting” for general field painting.

1.3 DEFINITIONS

A. MPI Gloss Level 5: 35 to 70 units at 60 degrees, according to ASTM D523.

B. MPI Gloss Level 6: 70 to 85 units at 60 degrees, according to ASTM D523.

C. MPI Gloss Level 7: More than 85 units at 60 degrees, according to ASTM D523.

1.4 SUBMITTALS

A. Product Data: For each type of product. Include preparation requirements and application instructions.

1. Include printout of current "MPI Approved Products List" for each product category specified, with the proposed product highlighted.
2. Indicate VOC content.

B. Samples for Initial Selection: For each type of topcoat product indicated.

C. Samples for Verification: For each type of coating system and each color and gloss of topcoat indicated.

1. Submit Samples on rigid backing, 8 inches square.

2. Apply coats on Samples in steps to show each coat required for system.
3. Label each coat of each Sample.
4. Label each Sample for location and application area.

D. Product List: Cross-reference to coating system and locations of application areas. Use same designations indicated on Drawings and in schedules. Include color designations.

1.5 MAINTENANCE MATERIAL SUBMITTALS

A. Furnish extra materials, from the same product run, that match products installed and that are packaged with protective covering for storage and identified with labels describing contents.

1. Coatings: 5 percent, but not less than 1 gal. of each material and color applied.

1.6 QUALITY ASSURANCE

A. Mockups: Apply mockups of each coating system indicated to verify preliminary selections made under Sample submittals and to demonstrate aesthetic effects and set quality standards for materials and execution.

1. Architect will select one surface to represent surfaces and conditions for application of each coating system.
2. Final approval of color selections will be based on mockups.

a. If preliminary color selections are not approved, apply additional mockups of additional colors selected by Architect at no added cost Owner.

3. Approval of mockups does not constitute approval of deviations from Contract Documents unless Architect specifically approves of such deviations in writing.
4. Subject to compliance with requirements, approved mockups may become part of the completed Work if undisturbed at time of Substantial Completion.

1.7 DELIVERY, STORAGE, AND HANDLING

A. Store materials not in use in tightly covered containers in well-ventilated areas with ambient temperatures continuously maintained at not less than 45 deg F.

1. Maintain containers in clean condition, free of foreign materials and residue.
2. Remove rags and waste from storage areas daily.

1.8 FIELD CONDITIONS

A. Apply coatings only when temperature of surfaces to be coated and ambient air temperatures are between 50 and 95 deg F.

B. Do not apply coatings when relative humidity exceeds 85 percent; at temperatures less than 5 deg F above the dew point; or to damp or wet surfaces.

C. Do not apply exterior coatings in snow, rain, fog, or mist.

PART 2 - PRODUCTS

2.1 MANUFACTURERS

A. Basis-of-Design Manufacturer: Provide high-performance paints manufactured by Sherwin Williams Paints and Coatings, Inc. Subject to compliance with requirements, equal products by other manufacturers may be incorporated into the Work. Manufacturer's include, but are not limited to the following:

1. Tnemec Company, Inc., PPG Architectural Finishes, Inc.
2. Behr Process Corporation.
3. Benjamin Moore & Co.
4. Comex Industrial Coatings; Comex Group.
5. Corotech Coatings; Benjamin Moore & Co.
6. Devoe Paint Company; Akzo Nobel.
7. Diamond Vogel Paints.
8. Dulux (formerly ICI Paints); a brand of Akzo Nobel.

2.2 HIGH-PERFORMANCE COATINGS, GENERAL

A. MPI Standards: Products shall comply with MPI standards indicated and shall be listed in its "MPI Approved Products Lists."

B. Material Compatibility:

1. Materials for use within each paint system shall be compatible with one another and substrates indicated, under conditions of service and application as demonstrated by manufacturer, based on testing and field experience.
2. For each coat in a paint system, products shall be recommended in writing by topcoat manufacturers for use in paint system and on substrate indicated.
3. Products shall be of same manufacturer for each coat in a coating system.

C. VOC Content: Products shall comply with VOC limits of authorities having jurisdiction.

1. Flat Paints and Coatings: 50 g/L.
2. Nonflat Paints and Coatings: 150 g/L.
3. Primers, Sealers, and Undercoaters: 200 g/L.
4. Anti-Corrosive and Anti-Rust Paints Applied to Ferrous Metals: 250 g/L.
5. Zinc-Rich Industrial Maintenance Primers: 340 g/L.
6. Pretreatment Wash Primers: 420 g/L.
7. Floor Coatings: 100 g/L.
8. Shellacs, Clear: 730 g/L.
9. Shellacs, Pigmented: 550 g/L.

D. Low-Emitting Materials: Interior coatings shall comply with the testing and product requirements of the California Department of Public Health's "Standard Method for the Testing and Evaluation of Volatile Organic Chemical Emissions from Indoor Sources Using Environmental Chambers."

E. Colors: As selected by Architect from manufacturer's full range.

2.3 SOURCE QUALITY CONTROL

A. Testing of Coating Materials: Owner reserves the right to invoke the following procedure:

1. Owner may engage the services of a qualified testing agency to sample coating materials. Contractor will be notified in advance and may be present when samples are taken. If coating materials have already been delivered to Project site, samples may be taken at Project site. Samples will be identified, sealed, and certified by testing agency.
2. Testing agency will perform tests for compliance with product requirements.
3. Owner may direct Contractor to stop applying coatings if test results show materials being used do not comply with product requirements. Contractor shall remove noncomplying coating materials from Project site, pay for testing, and recoat surfaces coated with rejected materials. Contractor will be required to remove rejected materials from previously coated surfaces if, on recoating with complying materials, the two coatings are incompatible.

PART 3 - EXECUTION

3.1 EXAMINATION

A. Examine substrates and conditions, with Applicator present, for compliance with requirements for maximum moisture content and other conditions affecting performance of the Work.

B. Verify suitability of substrates, including surface conditions and compatibility, with existing finishes and primers.

C. Proceed with coating application only after unsatisfactory conditions have been corrected.

1. Application of coating indicates acceptance of surfaces and conditions.

3.2 PREPARATION

A. Comply with manufacturer's written instructions and recommendations in "MPI Architectural Painting Specification Manual" applicable to substrates and coating systems indicated.

B. Remove hardware, covers, plates, and similar items already in place that are removable and are not to be painted. If removal is impractical or impossible because of size or weight of item, provide surface-applied protection before surface preparation and painting.

1. After completing painting operations, use workers skilled in the trades involved to reinstall items that were removed. Remove surface-applied protection if any.

C. Clean substrates of substances that could impair bond of coatings, including dust, dirt, oil, grease, and incompatible paints and encapsulants.

1. Remove incompatible primers and reprime substrate with compatible primers or apply tie coat as required to produce coating systems indicated.

D. Steel Substrates: Remove rust, loose mill scale, and shop primer if any. Clean using methods recommended in writing by paint manufacturer, but not less than the following:

1. SSPC-SP 7/NACE No. 4.
2. SSPC-SP 11.
3. SSPC-SP 6/NACE No. 3.
4. SSPC-SP 10/NACE No. 2.
5. SSPC-SP 5/NACE No. 1.

E. Shop-Primed Steel Substrates: Clean field welds, bolted connections, and areas where shop paint is abraded. Paint exposed areas with the same material as used for shop priming to comply with SSPC-PA 1 for touching up shop-primed surfaces.

F. Galvanized-Metal Substrates: Remove grease and oil residue from galvanized sheet metal by mechanical methods to produce clean, lightly etched surfaces that promote adhesion of subsequently applied coatings.

3.3 APPLICATION

A. Apply high-performance coatings according to manufacturer's written instructions and recommendations in "MPI Architectural Painting Specification Manual."

1. Use applicators and techniques suited for coating and substrate indicated.

B. If undercoats or other conditions show through final coat, apply additional coats until cured film has a uniform coating finish, color, and appearance.

C. Apply coatings to produce surface films without cloudiness, spotting, holidays, laps, brush marks, runs, sags, ropiness, or other surface imperfections. Produce sharp glass lines and color breaks.

3.4 FIELD QUALITY CONTROL

A. Dry Film Thickness Testing: Owner may engage the services of a qualified testing and inspecting agency to inspect and test coatings for dry film thickness.

1. Contractor shall touch up and restore coated surfaces damaged by testing.
2. If test results show that dry film thickness of applied coating does not comply with coating manufacturer's written recommendations, Contractor shall pay for testing and apply

additional coats as needed to provide dry film thickness that complies with coating manufacturer's written recommendations.

3.5 CLEANING AND PROTECTION

A. At end of each workday, remove rubbish, empty cans, rags, and other discarded materials from Project site.

B. After completing coating application, clean spattered surfaces. Remove spattered coatings by washing, scraping, or other methods. Do not scratch or damage adjacent finished surfaces.

C. Protect work of other trades against damage from coating operation. Correct damage to work of other trades by cleaning, repairing, replacing, and recoating, as approved by Architect, and leave in an undamaged condition.

D. At completion of construction activities of other trades, touch up and restore damaged or defaced coated surfaces.

3.6 HIGH-PERFORMANCE COATING SCHEDULE

A. Interior Ferrous Metals, Unprimed, 3 Coat:

1. Surface preparation: Power Tool Cleaning per SSPC SP-3.
2. Primer Coat: Sherwin-Williams Macropoxy 646 Fast Cure Epoxy, B58-600 Series @ 5.0 to 7.0 dry mils. Where VOC's are restricted, use Macropoxy 646-100, B58-620 Series.
3. Intermediate Coat: Sherwin-Williams Acrolon 218 HS Polyurethane Semi-Gloss, B65-650 series @ 3.0 – 4.0 dry mils. Where VOC's are restricted, use Hi-Solids Polyurethane 100 Semi-Gloss, B65-630 Series.
4. Top Coat: Sherwin-Williams Acrolon 218 HS Polyurethane Semi-Gloss, B65-650 series @ 3.0 – 4.0 dry mils. Where VOC's are restricted, use Hi-Solids Polyurethane 100 Semi-Gloss, B65-630 Series.

B. Exterior Ferrous Metals, Unprimed at Exterior or Exposed Perimeter Locations, 3 Coat:

1. Surface preparation: Commercial Blast Cleaning per SSPC-SP6.
2. Primer Coat: Sherwin-Williams Corothane 1 Gal-Va-Pac Zinc Rich Primer, B65G10 @ 3.0 - 4.0 dry mils.
3. Intermediate Coat: Sherwin-Williams Macropoxy 646 Fast Cure Epoxy, B58-600 Series @ 4.0 - 5.0 dry mils. Where VOC's are restricted, use Macropoxy 646-100, B58-620 Series.
4. Top Coat: Sherwin-Williams Acrolon 218 HS Polyurethane Semi-Gloss, B65-650 series @ 3.0 – 4.0 dry mils. Where VOC's are restricted, use Hi-Solids Polyurethane 100 Semi-Gloss, B65-630 Series.

C. Galvanized & Non-Ferrous Metals, 2 Coat:

1. Surface preparation: Solvent Clean per SSPC-SP1. Apply a mock-up/test-patch after one week and test for adhesion per ASTM D3359. Document results to Architect in writing. If results are poor, additional surface prep including Brush Blasting may be required.

2. Base Coat: Sherwin-Williams Macropoxy 646 Fast Cure Epoxy, B58-600 Series @ 2.0 – 3.0 dry mils. Where VOC's are restricted, use Macropoxy 646-100, B58-620 Series.
3. Top Coat Semi-Gloss: Sherwin-Williams Acrolon 218 HS Polyurethane Semi-Gloss, B65-650 series Series @ 3.0 – 4.0 dry mils. Where VOC's are restricted, use Hi-Solids Polyurethane 100 Semi-Gloss, B65-630 Series.

END OF SECTION 099600

SECTION 101100 - VISUAL DISPLAY UNITS

PART 1 - GENERAL

1.1 RELATED DOCUMENTS

A. Drawings and general provisions of the Contract, including General and Supplementary Conditions and Division 1 Specification Sections, apply to this Section.

1.2 SUMMARY

A. This Section includes the following:

1. Porcelain enamel marker boards with aluminum frames.
2. Vinyl-faced cork tack boards with aluminum frames.
3. Wrapped vinyl-faced cork tack boards (Frameless).
4. Map rails with aluminum frames.
5. Natural-slate chalkboards.

1.3 SUBMITTALS

A. Product Data: For each type of visual display board indicated.

B. Shop Drawings: For each type of visual display board required.

1. Include dimensioned elevations. Show location of joints between individual panels where unit dimensions exceed maximum panel length.
2. Include sections of typical trim members.
3. Show anchors, grounds, reinforcement, accessories, layout, and installation details.
4. Where occurs, Contractor shall verify the existing board dimensions to ensure new visual display boards cover extent of existing boards.

C. Samples for Initial Selection: Manufacturer's color charts showing the full range of colors and textures available for the following:

1. Markerboards: Actual sections of porcelain enamel finish for each type of marker board required.
2. Vinyl-Faced Cork Tackboards: Samples for each type of vinyl- faced cork tack board indicated.
3. Tack Strips: Samples for each type of cork required.

D. Product Certificates: Signed by manufacturers of tack boards certifying that vinyl-faced materials furnished comply with requirements specified for flame-spread ratings.

1.4 QUALITY ASSURANCE

A. Installer Qualifications: Engage an experienced installer who is an authorized representative of marker board manufacturer for both installation and maintenance of the type of sliding marker board units required for this Project.

B. Source Limitations: Obtain visual display boards through one source from a single manufacturer.

C. Product Options: Drawings indicate size, profiles, and dimensional requirements of visual display boards and are based on the products indicated. Other manufacturers' products with equal performance characteristics may be considered. Refer to Division 1 Section "Substitutions."

1. Do not modify intended aesthetic effects, as judged solely by Architect, except with Architect's approval and only to the extent needed to comply with performance requirements. Where modifications are proposed, submit comprehensive explanatory data to Architect for review.

D. Fire-Test-Response Characteristics: Provide vinyl- and fabric-faced tackboards with the following surface-burning characteristics as determined by testing assembled materials composed of facings and backings identical to those required in this Section per ASTM E 84 by a testing and inspecting agency acceptable to authorities having jurisdiction. Identify vinyl- and fabric-faced tack boards with appropriate markings of applicable testing and inspecting agency.

1. Flame Spread: 25 or less.
2. Smoke Developed: 10 or less.

E. Field Measurements: Verify field measurements before preparation of Shop Drawings and before fabrication to ensure proper fitting. Coordinate fabrication schedule with construction progress to avoid delaying the Work.

1. Allow for trimming and fitting where taking field measurements before fabrication might delay the Work.

1.5 WARRANTY

A. Special Warranties: As follows:

1. Writing Surface: Manufacturer’s standard, written, material warranty agreeing at manufacturer’s option to repair or replace the original boards if they do not retain their original writing and erasing qualities, gloss variance, or color consistency under normal usage and maintenance, without reducing or otherwise limiting any other rights to correction which the Owner may have under the Contract Documents. Warranty does not include the cost of removal or reinstallation.

a. Term of Warranty: Limited lifetime warranty.

2. Workmanship and Materials: Manufacturer's standard, written, material replacement warranty agreeing at manufacturer's option to repair or replace any products which, under normal usage and maintenance, show defects in workmanship or materials, without reducing or otherwise limiting any other rights to correction which the Owner may have under the Contract Documents. Warranty does not include the cost of removal or reinstallation.

   a. Term of Warranty: 10 years from date of Substantial Completion.

PART 1 - PRODUCTS

2.1 MANUFACTURERS

A. Available Manufacturers: Subject to compliance with requirements, manufacturers offering products that may be incorporated into the Work include the following:

1. Basis of Design:

   a. AARCO

2. Approved Manufacturers:

   a. Claridge Products and Equipment, Inc.

2.2 MATERIALS FOR MARKER BOARD PANELS

A. Writing Surface Facing Sheet: Provide "E-3" surface.

1. Enameling grade cold-rolled steel, manufactured from a minimum of 30 percent post-consumer and post-industrial waste, .016 inch thick for all pre-framed boards without joints. All face sheets shall be .025 inch thick for boards with spline joints and have the same content as .016 inch thick face sheets.

2. Writing surfaces shall consist of the following characteristics:

   a. All coatings shall contain less than a combined total of less than 0.1 percent of heavy metals cadmium, mercury, hexavalent chromium, and lead.
   b. All coatings shall be free of arsenic and antimony as well as volatile organic compounds.
   c. Writing surface face sheet shall be 99 percent recyclable.
   e. Marker board 80 to 85 percent gloss (low-gloss surface), recommended for projection. Wet cleaning required if used as a marker surface.
   f. Facing Sheet Coatings:

      1. Face Coat: 1.7 to 2.5 mils minimum thickness enameled ground coat.
      2. Cover Coat: 3.0 to 4.0 mils enameled color coat.
      3. Back Coat: 1.7 to 2.5 mils enameled minimum ground coat.
      4. Firing Temperatures: 1,475 to 1,500 deg F, minimum.

g. Color(s): As selected by the Architect from the manufacturer's range of standard colors.

3. Screen-printed graphics are to be porcelain-enameled fired-on lines and graphics for maximum durability.

a. Staff Lines: Refer to Drawings for locations.

B. Writing Surface Core:

1. Core: Minimum 7/16 inch thick, particleboard core material complying with requirements of ANSI A208.1, Grade 1-M-1.
2. Backing Sheet: Manufacturer's standard; moisture-blocking backing, 0.015 inch thick; recyclable; factory-laminated to core material.
3. Laminating Adhesive: Manufacturer's standard, moisture-resistant, thermoplastic-type adhesive.

C. Lamination: Factory-machine-type only.

2.3 MATERIALS FOR TACK BOARD PANELS

A. Core: Composed of 100 percent post-consumer and post-industrial waste, or 100 percent naturally-sustainable; 1/4-inch fiberboard laminated to 1/4-inch natural cork.

B. Coverings:

1. 100 percent naturally-sustainable.

2. Covering Materials: Provide the following, as indicated:

a. Framed Tack Boards:
i. Manufacturer: Koroseal or Equal
ii. Series: Harborweave II
iii. Fabric: 21-ounce-per-linear-yard vinyl
iv. Backing: Woven 80/20 Type II
v. Flammability: ASTM E84 Class A/Class 1.
vi. Cleaning: Water/Solvent and Bleach Cleanable.
vii. Width: 53/54 inches
viii. Colors: As selected by the Architect from the manufacturer's range of standard colors. Provide a minimum of (21) colors.

b. Fabric-Wrapped Tack Boards (Frameless):
i. Manufacturer: Carnegie-Xorel
ii. Series: Meteor.
iii. Fabric: 16-oz-per-linear-yard, 100% IRP Xorel.
iv. Backing: X-Protect Wall microvent.
v. Flammability: ASTM E84 Class A/Class 1.
vi. Cleaning: Water/Solvent and Bleach Cleanable.
vii. Width: 52 inches

viii. Colors: As selected by the Architect from the manufacturer's range of standard colors. Provide a minimum of (80) colors.

2.4 ACCESSORIES

A. Metal Trim and Accessories: Fabricate frames and trim of not less than 0.062-inch thick, extruded-aluminum alloy, size and shape as indicated, to suit type of installation. Provide straight, single-length units. Miter corners to a neat, hairline closure.

1. Field-Applied Trim: Manufacturer's standard snap-on trim with no visible fasteners or exposed joints.

   a. Location: All visual display boards unless noted otherwise.
   b. Profile: Aarco, 10-350 RF Series.

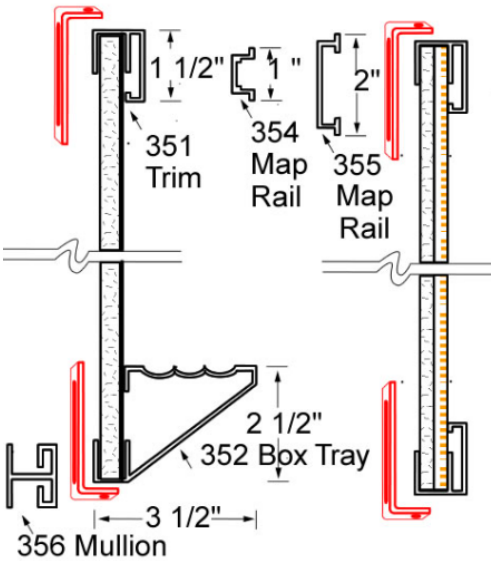

2. Where size of visual display boards or other conditions require support in addition to normal trim, provide structural supports or modify trim as indicated or as selected by Architect from manufacturer's standard structural support accessories to suit conditions indicated.

B. Map Rails: Furnish map rail at top of each marker board with rail length equaling length of marker board. In instances where tack boards are located adjacent to marker board, map rail should equal length of marker boards and tack boards. Each map rail on marker boards shall be complete with the following accessories:

1. Map Rail: Provide continuous color impregnated cork display rail, approximately 2 inches wide integral with map rail.
2. End Stops: Provide one end stop at each end of map rail.
3. Map Hooks: Provide 2 metal map hooks for every 48 inches of map rail or fraction thereof.
4. Flag Holder: Provide one flag holder for each room.

5. Metal Roller Brackets: Provide one pair for each room.
6. Colors: As selected by Architect from manufacturer's full range of colors. Provide a minimum of (15) color selections.

2.5 NATURAL-SLATE CHALKBOARDS

A. Natural Slate: Select grade, resurfaced, natural slate; free from ribbons and other natural marks that impair their functional use and durability as a writing surface.

1. Thickness: Not less than ¼ inch or more than 3/8 inch thick with maximum deviation of 1/16 inch when an average thickness of at least ¼ inch is maintained.

B. Surface slate panels to a natural plane. Grind and hone to smooth, uniform finish equivalent to that obtained by minimum 180 grit and maximum 220 grit.

1. Cut joints straight and true. Space joints symmetrically. Fit and match panels before shipment to provide continuous, uniform writing surface.
2. Provide writing surface free of tooling marks, pits, chipping scratches, and surface spalls in excess of those that can be easily corrected; and free of surface-applied stain, dye, or other artificial coloring.
3. Length: Furnish panels approximately equal in length with permissible variation not more than 3 inches in either direction of equal spacing. Allow ¼-inch clearance at trim in length and width for fitting. Provide lengths of panels in each space as follows:

a. 8'-0" W x 4'-0"H. Refer to A2.4 for location.

C. Aluminum: Fabricated from not less than 0.062-inch-thick, extruded aluminum; of size and shape indicated on Drawings: snap-on type with no visible screws or exposed joints.

2.6 FABRICATION

A. Porcelain Enamel Marker Boards: Laminate facing sheet and backing sheet to core material under pressure with manufacturer's recommended flexible, waterproof adhesive.

B. Vinyl-faced Cork Tack Boards: Vinyl fabric and backing sheet to core material under pressure with manufacturer's recommended flexible, waterproof adhesive.

C. Assembly: Provide factory-assembled marker board and tack board units, unless field-assembled units are required.

1. Make joints only where total length exceeds maximum manufactured length. Fabricate with minimum number of joints, balanced around center of board, as acceptable to Architect.

a. Provide marker board lengths of 16'-0" wide maximum with no seams. For boards over 16' – 0", provide butt-joint at seam locations. Refer to drawings for seam locations.

2. Provide manufacturer's standard mullion trim at joints between marker board and tack boards for field-applied trim units.

2.7 FINISHES

A. General: Comply with NAAMM's "Metal Finishes Manual for Architectural and Metal Products" for recommendations relative to applying and designating finishes.

B. Finish designations prefixed by AA conform to the system established by the Aluminum Association for designating aluminum finishes.

C. Class II, Clear Anodic Finish: AA-M12C22A31 (Mechanical Finish: nonspecular as fabricated; Chemical Finish: etched, medium matte; Anodic Coating: Architectural Class II, clear coating 0.010 mm or thicker) complying with AAMA 607.1.

PART 2 - EXECUTION

3.1 EXAMINATION

A. Examine wall surfaces, with Installer present, for compliance with requirements and other conditions affecting installation of visual display boards.

1. Surfaces to receive marker boards shall be free of dirt, scaling paint, and projections or depressions that would affect smooth, finished surfaces of marker boards.
2. Surfaces to receive tack boards shall be dry and free of substances that would impair the bond between tack boards and substrate.
3. Do not proceed with installation until unsatisfactory conditions have been corrected.

3.2 INSTALLATION

A. Field-applied Trim:

1. Deliver factory-built visual display boards completely assembled in one piece without joints, unless noted otherwise. If dimensions exceed panel size, refer to drawings for seam locations. When overall dimensions require delivery in separate units, prefit components at the factory, disassemble for delivery, and make final joints at the site. Use splines at joints to maintain surface alignment.
2. Install units in locations and at mounting heights indicated and according to manufacturer's written instructions. Keep perimeter lines straight, plumb, and level. Provide grounds, clips, backing materials, adhesives, brackets, anchors, trim, and accessories necessary for complete installation.

A. Natural-Slate Chalkboards: Align and level joints between adjoining panels, and apply manufacturer's recommended joint-filler compound. Hone and finish joints to continuous even plane.

B. Coordinate Project-site-assembled units with grounds, trim, and accessories. Join parts with a neat, precision fit.

3.3 ADJUSTING AND CLEANING

A. Verify that accessories required for each unit have been properly installed and that operating units function properly.

B. Clean units according to manufacturer's written instructions.

END OF SECTION 101100

SECTION 101112 - SPECIALTY BUILDING PRODUCTS

PART 1 - GENERAL

1.1 RELATED DOCUMENTS

A. Drawings and general provisions of the Contract, including General and Supplementary Conditions and Division 1 Specification Sections, apply to this Section.

1.2 SUMMARY

A. This Section includes the following:

1. Kiln with downdraft vent system.
2. Field-Applied, Vinyl-Character Signs.
3. Glass Markerboards.
4. Thru-Wall Book Drop.
5. Media Center Furniture.

1.3 DESCRIPTION

A. Work Included:

1. Furnish labor, materials, tools, equipment, services and supervision required to complete specialty building products work, including all incidental and complementary work shown, specified or necessary to complete work.
2. All final connections for all specialty building products included in this Section shall be made by the respective equipment suppliers and installers.

1.4 QUALITY ASSURANCE

A. Regulations, Standards and Publications:

1. FS - Federal Specifications
2. ASTM - American Society for Testing and Materials
3. NAAMM - National Association of Architectural Metal Manufacturing

B. Quality Control: Materials and products shall be made in strict accordance with regulations and standards listed herein.

C. Product Handling: Deliver all materials in good condition. Store in dry place, off ground; keep dry at all times. Handle materials to prevent damage to product or structure.

1.5 SUBMITTALS

A. Product Data: Submit manufacturer's latest publications of descriptive literature and product data for each product specified.

B. Shop Drawings:

1. Contractor shall submit Shop Drawings for review in accordance with Conditions of Contract.
2. Indicate locations, dimensions, anchorage, types and gauges of metals or materials being used, features included, elevations, etc.

C. Manufacturer's full range of colors and textures, including standard and premium options where indicated.

PART 2 - PRODUCTS

2.1 MATERIALS AND EQUIPMENT

A. Kilns: Subject to compliance with requirements, provide one of the following kiln equivalent:

1. Series:
   a. Skutt Pyrometer Kiln, Model No. KM1227-3 208V, 3-Phase
   b. L and L Kilns, Inc.: Jupiter Model Number JD230V-208.

2. Accessories:
   c. Down Draft Vent System:
      1) Skutt, Envirovent 2 Down Draft ventilation system
      2) L&L Kilns, Inc. “Vent-Sure Kiln Vent System”
   d. Furniture Kits
   e. Lid Lifter

B. Field-Applied, Vinyl-Character Sign: Pre-spaced characters die cut from 3-mil to 3.5-mil thick, weather-resistant, UV resistant vinyl film with release liner on the back and carrier film on the front for on-site alignment and application.

1. Size: 6-inches high.
2. Substrate: Exterior Glass Doors, Exterior Hollow Metal Doors and Exterior Overhead Coiling Doors.
3. Font: Helvetica.
4. Text: Refer to Door Schedule.
5. Installation: Apply to clean and dry substrate. Align sign characters in final position before removing release liner. Remove release liner in stages, and apply and firmly press characters into final position. Press from the middle outward to obtain good bond without blisters or fishmouths. Remove carrier film without disturbing applied vinyl film.
6. Quantity: (2) Sets per door, located on interior and exterior face of door. If on glass, sign shall be installed back-to-back.

C. Glass Markerboard System:

1. Manufacturer: Clarus Glassboards, https://www.clarus.com/glide/.
2. Series: Glide-TV, (2) wall mounted fixed panels, (2) sliding panels with (1) center fixed panel with clear window.
3. Material: 1/4-inch PPG Starphire Tempered Safety Writing Glass. Non-staining writing surface.
4. Finish: Magnetic, Opti-Clear.
5. Size: 138 inches by 60 inches.
6. Corners: Eased.
7. Colors: As selected by Architect from manufacturer's standard finishes and neutral palette with standoffs. Glass marker boards must be
8. Installation: Provide all mounting hardware/anchors necessary for a complete installation.

D. Thru-Wall Book Drop:

1. Manufacturer: Kingsley Library Returns and Equipment.
   a. (https://kingsley.com/valustar.html/)
2. Model: K-TWV Valu Star Thru-Wall (10-9116).
3. Material: Aircraft grade corrosion resistant aluminum with neoprene rubber AirBloc.
4. Finish: Aluminum,
5. Size: 18.08"W x 13.8"D x 12.23"H.
6. Chute size: 13"W x 2.7"H Provide extension as needed to fit wall depth.
7. Locking: Depository flap locking system.
8. Wording: Vinyl decal, silkscreen or routing.

E. Media Center Furniture: All finishes as selected from manufacturer's full range of standard finishes with P2 fabric grade for KI upholstered components. Contact information: KI: Eric Heathershaw @ eric.heathershaw@corbettinc.com.

Item No.	Description	Manufacturer	Model Number
505	Oath | Task Chair Task w/ Adjustable arms. Chair with mesh back and upholstered seat. Plastic base, carpet casters.	KI, Inc.	No. OH84QB Mesh: Black Plastic Base: Black Upholstery: Pallas, Lumiere Cirque Collection
506	Instruct All | Terrain Mobile Instructor's Desk w/ carpet Sincasters. Provide T: Leg Assembly, Steel modesty panel, steel door, top sloped land pad & metric pull.	KI, Inc.	ATMTDP2454-WSL 54"Wx24"Dx40"H
507	700 Series | Rectangular desk with partial modesty panel and Box/Box/ File.	KI, Inc.	7D/D3060/S7P/1530WBBF 60"Wx30"Dx29"H

508	Trek | Flip top rectangular training table w/ T-Base & carpet casters.	KI, Inc.	T255FT 60”Wx30”Dx29”H
509	DONI | Stack Chair Four-Leg frame. Armless Stack Chair – Solid Color Polypropylene Seat & back, nylon glides.	KI, Inc.	DN1100
510	MYPLACE | Hexagon Ottoman, Junior, Non-contrast w/ concealed glides.	KI, INC.	MPJ18H/CGL/NC Upholstery: Pallas, Imbue Collection
511	MYPLACE | Round Ottoman, Junior, Non-contrast w/ concealed glides.	KI, INC.	MPJ18R/CGL/NC Upholstery: Pallas, Imbue Collection
512	MYWAY | Low arms lounge, contrast w/ sled base.	KI, INC.	MYLL/FC Upholstery: Pallas, Lumiere Cirque Collection
513	MYPLACE | Lounge Chair, 32” low back, contrast fabric w/ concealed glides & ganging kit	KI, INC.	MPSQRL/CGL/FC Upholstery: Pallas, Lumiere Cirque Collection
514	MYPLACE | Rectangular in-line table with pad w/ concealed glides & ganging kit	KI, INC.	MPTEDP/CGL/NC Upholstery: Pallas, Lumiere Cirque Collection
515	Solitice | Occasional Table, Round lamp table, laminate top, 22”high & 24”Diameter.	KI, INC.	SMFT/2204/L

PART 3 - EXECUTION

3.1 INSTALLATION

A. Specialty building products, build into place by appropriate trade on work. Erect work to lines and levels, plumb and true, in correct relation to adjoining work. Secure parts in rigid, substantial manner; attachment concealed wherever practicable.

B. Install all specialty building products in accordance with manufacturers’ written instructions.

C. All items shall be complete with manufacturer-supplied or –recommended hardware and fasteners, ready to install.

D. Make all final connections to mechanical, electrical and plumbing equipment where required and in accordance with manufacturer’s written instructions.

3.2 CLEAN UP

A. All work shall be left in clean condition, and all debris and rubbish cleaned up and removed from site by Contractor.

END OF SECTION 101112

SECTION 101115 – VINYL GRAPHICS

PART 1 - GENERAL

1.1 RELATED DOCUMENTS

A. Drawings and general provisions of the Contract, including General and Supplementary Conditions and Division 1 Specification Sections, apply to this Section.

1.2 SUMMARY

A. This Section includes the following:

1. Custom digital print die-cut vinyl graphics, and temporary negative graphics as follows:

a. Digitally printed vinyl media for first surface application on interior surfaces.
b. Overlaminates for application over underlying graphics.

1.3 PERFORMANCE REQUIREMENTS

A. Fire Performance: Surface burning characteristics when tested in accordance ASTM E 84:

1. Digital Vinyl Media: Fire rating: Class A; fire behavior, per DIN 75200: self-extinguishing when adhered to steel.
2. Window Film: Fire rating: Class A; flame spread: 25, maximum; smoke developed: 450, maximum.

1.4 SUBMITTALS

A. Product Data: Manufacturer's data sheets on each product to be used, including:

1. Preparation instructions and recommendations.
2. Storage and handling requirements and recommendations.
3. Installation methods.

B. Shop Drawings: Full-color replication of graphic designs and layouts indicated. Include overall dimensions and seam locations of graphics, if any, as well as special attachment requirements. Minimum scale shall be no less than 1-1/2 inches per foot.

1. Indicate specific material type based on Vinyl Graphics Schedule at the end of this Section and details on Drawings.
2. Final design, type, size, color, text font and finish to be approved by Architect prior to fabrication.

C. Samples: For each type of film specified representing manufacturer's film type, adhesives, colors and patterns.

1.5 QUALITY ASSURANCE

A. Producer/Installer Qualifications: An established Producer/Installer with a minimum of ten (10) years of documented experience producing and installing vinyl graphics of the type and complexity of those required on Project. All custom graphics shall be produced by Installer and installed by Installer's direct employees.

1. Provide a commercial building reference list including a minimum of 5 projects with vinyl graphics both produced and installed by Installer using Installer's direct employees. Reference list must include the following information:

   a. Name of direct client including contact information.
   b. Type of substrate.
   c. Type of product.
   d. Amount of product installed.
   e. Date of completion.

2. Pre-approved Producer/Installers include the following:

   a. Stoner Graphix, Harrisburg PA (717) 469-7716 www.stonergraphix.com
   b. Berry and Homer, Chester, PA (215) 425-0888 www.berryandhomer.com
   c. Subject to verifiable experience, additional Producer/Installers are acceptable upon approval by Architect.

B. Mock-Up: Provide a mock-up of each specified material and type of installation for evaluation of surface preparation, installation techniques and application workmanship.

1. Architect will designate location of each mock-up.
2. Do not proceed with remaining work until workmanship, color, pattern and sheen are approved by Architect.
3. Refinish mock-up area as required to produce acceptable results.
4. Approved mock-ups may become a part of the final installation.

1.6 DELIVERY, STORAGE, AND HANDLING

A. Deliver and store non-custom products in manufacturer's unopened packaging until ready for installation.

B. Deliver and store custom fabricated products in a manner to adequately protect them from damage by jobsite activities.

C. Damaged or otherwise compromised materials will be rejected for use on Project.

1.7 PROJECT CONDITIONS

A. Maintain environmental conditions (temperature, humidity, and ventilation) within limits recommended by manufacturer for optimum results. Do not install products under environmental conditions outside manufacturer's absolute limits.

1.8 WARRANTY

A. At Project close-out, provide Owner with an executed current copy of Manufacturer's standard limited warranty against manufacturing defect outlining its terms, conditions, and exclusions from coverage.

1. Provide a 1-year Installers warranty beginning at final acceptance of the work by Architect and Owner,

PART 2 - PRODUCTS

2.1 CUSTOM VINYL GRAPHICS

A. General: Digital graphics shall be printed on high-performance vinyl graphic media of the type indicated and capable of permanently and accurately printing images indicated on Drawings. Provide raw materials in the greatest available dimensions to minimize seams. Printing equipment, inks and printing software shall be fully compatible with vinyl graphic media and shall be approved by media manufacturer.

B. **Vinyl Type 1:** Digitally Printed Vinyl Media for Application on Interior Surfaces: Basis of Design Product; Oracal Orajet 3551 RA High Performance Polymeric PVC.

1. Application: First surface application on painted gypsum wallboard, painted gypsum veneer plaster and glass.
2. Color: Arctic White gloss finish.
3. Adhesive: Gray, solvent based repositionable adhesive.
4. Thickness: 2.75 mils.
5. Release liner: 88# PE-coated silicone paper.
6. Dimensional Stability: Comply with FINAT TM-14.
7. Fire-Resistance Rating: Comply with ASTM E84-07, Class A.
8. Tensile Strength: Min. 19 MPa along and across in accordance with DIN EN ISO-527.
9. Elongation to Break: Min 130% along and 150% across.
10. Width: 60-inches.

C. **Vinyl Type 2:** Overlaminate: Basis of Design Product; Briteline WrapCAST Overlaminate, protective overlaminate.

1. Application: First surface application over opaque, digitally printed underlying graphics installed on painted gypsum wallboard, painted gypsum veneer plaster and glass.
2. Color: Optically clear, satin.
3. Adhesive: Permanent solvent, low initial tack adhesive to allow easy repositioning.
4. Thickness: 2 mils.
5. Width: 60-inches.
6. Minimum Application Temperature: 50 deg. F.

D. **Vinyl Type 3:** Digitally Printed Vinyl Media for Application on Interior Surfaces: Basis of Design Product; Arlon, DPF 6700 Vinyl Film, Cast Wall Wrap Film.

1. Application: First surface application on painted concrete masonry unit and porcelain tile.
2. Color: Arctic White gloss finish.
3. Adhesive: Clear, permanent.
4. Thickness: 2 mils.
5. Release liner: Lay-Flat Polycoated.
6. Dimensional Stability: 0.018 inch, Shrinkage after 158 degrees F, 48 hours aging.
7. Tensile Strength: Minimum 4.5 lb./inch width
8. Elongation to Break: Min 150%.
9. Width: Refer to drawings.

PART 3 - EXECUTION

3.1 EXAMINATION

A. Examine application surfaces and substrates. If preparation of surfaces or substrates is the responsibility of another installer, notify Architect in writing of deviations from manufacturer's recommended installation tolerances and conditions.

B. Do not proceed with installation until surfaces have been properly prepared and deviations from manufacturer's recommended tolerances are corrected. Prepare surfaces using the methods recommended by the manufacturer for achieving the best result under the Project conditions.

C. Proceed with installation upon acceptable conditions.

3.2 PREPARATION

A. Clean surfaces thoroughly prior to installation.

B. Prepare surfaces using the methods recommended by the manufacturer for achieving the best result for the substrate under the Project conditions.

C. Vinyl Graphics Substrate Preparation: Freshly painted surfaces must be permitted to stand for a minimum of three weeks after complete curing prior to application of film, unless otherwise directed by manufacturer.

1. Test compatibility of lacquers and paints prior to vinyl graphic installation; only proceed when substrates are determined to be compatible. Report any deficiencies to Architect.
2. Clean substrate surfaces of which vinyl graphic materials will be applied to be free of dust, grease or other contaminants.

3.3 VINYL GRAPHICS FABRICATION

A. Stock Material Storage: Carefully follow digital print vinyl graphic media manufacturer's written instructions for storing and processing printing media.

1. Store rolls of media by suspending or standing on end using roll blocks; do not store material lying on its side. Store media in cool, dry location, following manufacturer's guidelines for temperature and relative humidity. Do not store near direct sunlight or adjacent to heat sources, including radiators or space heaters.

B. Printing: Handle printing media with extreme care and caution, following manufacturer's published instructions. Handlers shall wear lint-free gloves to prevent oils and other contaminants from damaging printing surfaces. Ensure the proper printing devices, inks and software profiles are being used, depending on media type. Do not proceed with printing until all required criteria are verified.

C. Printed Material Curing: To avoid the risk of delamination, edge curling or adhesive failure, allow printed film to dry/cure for a period of 48 to 72 hours at a temperature of 70 deg. F.

1. To allow for proper outgassing; prints that are heavily saturated with ink shall dry for the maximum amount of time recommended by manufacturer. Store materials on a flat surface or lightly rolled, as directed by manufacturer to ensure solvent gases of the ink properly escape and do not affect the adhesive layer.

3.4 VINYL GRAPHICS INSTALLATION – GYPSUM WALL BOARD

A. Install custom digital print vinyl graphics in accordance with media manufacturer's written instructions.

B. Lay the graphic onto a flat surface with image side down. Pull back the adhesive liner approximately 3-inches. Sharply crease the liner while holding it away from the adhesive. Align the graphic on the wall and use finger pressure to tack into place onto the wall substrate. Greater lengths of material shall be temporarily tacked to surface with masking tape; verify the tape adhesives will not mar the film surface or adjoining material surfaces.

C. Using a squeegee, work from the center to the edge, and then return to the center and work to the opposite edge. Use overlapping strokes while applying a small portion of the graphic at a time. Keep material taught as tooling progresses to avoid creasing the graphic surface; work short horizontal and vertical increments to ensure precise alignment along corners and material transitions. Ensure adequate pressure is applied over graphic to guarantee appropriate bonding to substrate. Work material surface to ensure air bubbles are removed.

D. If graphic consists of multiple panels, avoid using horizontal seams whenever possible. Whenever horizontal seams cannot be avoided, carefully align edges so that seams appear as inconspicuous as possible.

E. When the entire graphic has been applied to the wall, re-squeegee the edges of the surface to ensure a strong bond. Carefully trim off excess material from edges and corners.

3.5 VINYL GRAPHICS INSTALLATION – CONCRETE MASONRY UNITS

A. Install custom digital print vinyl graphics in accordance with media manufacturer's written instructions.

1. Direct heat application utilizing a high temperature, electronically-controlled heat gun capable of reaching at least 1000 °F (538 °C) in conjunction with recommended rollers for textured walls.

B. Lay the graphic onto a flat surface with image side down. Pull back the adhesive liner approximately 3-inches. Sharply crease the liner while holding it away from the adhesive. Align the graphic on the wall and use finger pressure or lightly roll it to tack into place onto the wall substrate. Greater lengths of material shall be temporarily tacked to surface with masking tape; verify the tape adhesives will not mar the film surface or adjoining material surfaces.

1. A quick and light pass with the heat gun and the roller over the edges of the graphic can be utilized to set the edges, but do not conform the graphic; it is critical that air have an escape path during installation.

C. Working from the top corner of the graphic, heat the film in a 1-1/2 to 2 inch wide band until warm and immediately begin rolling the film. With the roller closely following the heat gun, use overlapping passes while heating a small portion of the graphic at a time. Keep material taught as heating progresses to avoid creasing the graphic surface; work short horizontal increments to ensure precise alignment along corners and material transitions. Ensure adequate pressure with roller is applied over graphic to guarantee appropriate bonding to substrate. Work material surface to ensure air bubbles are removed.

D. If graphic consists of multiple panels, avoid using horizontal seams whenever possible. Whenever horizontal seams cannot be avoided, carefully align edges so that seams appear as inconspicuous as possible.

E. Carefully trim off excess material from edges and corners.

3.6 CLEANING AND PROTECTION

A. Remove left over material and debris from Work area. Use necessary means to protect film before, during, and after installation.

B. Touch-up, repair or replace damaged products before Substantial Completion.

C. After application of film, wash film using common window cleaning solutions, including ammonia solutions, 30-days after application. Do not use abrasive type cleaning agents and bristle brushes to avoid scratching film. Use synthetic sponges or soft cloths.

3.7 GRAPHIC SCHEDULE

A. “Welcome Languages” Graphic at B112 Main Lobby:

1. Vinyl Type 1, digitally printed vinyl media with Vinyl Type 2 overlaminate.

a. Substrate: Painted gypsum wallboard, first surface application.

B. “Coopertown Elementary” Graphic at B112 Main Lobby:

1. Vinyl Type 1, digitally printed vinyl media with Vinyl Type 2 overlaminate.

a. Substrate: Painted gypsum wallboard, first surface application.

C. “Boy and Girl Logo” Graphic at B112 Main Lobby:

1. Vinyl Type 1, digitally printed vinyl media with Vinyl Type 2 overlaminate.

b. Substrate: Painted gypsum wallboard, first surface application.

D. “Cougar Head” Graphic at B113 Commons:

1. Vinyl Type 3, digitally printed vinyl media with Vinyl Type 2 overlaminate.

a. Substrate: Painted gypsum wallboard, first surface application.

E. “Coop Cares” Graphic at B123 Cafeteria:

1. Vinyl Type 1, digitally printed vinyl media with Vinyl Type 2 overlaminate.

a. Substrate: Painted gypsum wallboard, first surface application.

F. “Cougar Head” Graphic at B123 Cafeteria:

1. Vinyl Type 1, digitally printed vinyl media with Vinyl Type 2 overlaminate.

a. Substrate: Painted gypsum wallboard, first surface application.

G. “Airplane” Graphic at B123 Cafeteria:

1. Vinyl Type 1, digitally printed vinyl media with Vinyl Type 2 overlaminate.

a. Substrate: Painted gypsum wallboard, first surface application.

H. “All The Places You Can Go on banner” Graphic at B123 Cafeteria: Words shall be printed as wallpaper vs individual die-cut words.

1. Vinyl Type 1, digitally printed vinyl media with Vinyl Type 2 overlaminate.

a. Substrate: Painted gypsum wallboard, first surface application.

I. “Paw Prints” Graphic at B123 Cafeteria:

1. Vinyl Type 1, digitally printed vinyl media with Vinyl Type 2 overlaminate.

a. Substrate: Painted gypsum wallboard, first surface application.

J. “Cougar Head” Graphic at B125 Corridor:

1. Vinyl Type 3, digitally printed vinyl media with Vinyl Type 2 overlaminate.

a. Substrate: Painted concrete masonry, first surface application.

END OF SECTION 101115

SECTION 101200 - DISPLAY CASES

PART 1 - GENERAL

1.1 RELATED DOCUMENTS

A. Drawings and general provisions of the Contract, including General and Supplementary Conditions and Division 01 Specification Sections, apply to this Section.

1.2 SUMMARY

A. Section Includes:

1. Display cases.

B. Related Requirements:

1. Division 10 Section "Visual Display Units" for tack boards.

1.3 DEFINITIONS

A. Display Case: Glazed cabinet with or without tack board panel back surface and adjustable shelves.

B. Tack Board Panel: A material for holding push-pins or tacks typically consisting of a facing; such as fabric, vinyl, or cork; adhered to a substrate; such as fiberboard, hardboard, or particleboard.

1.4 PREINSTALLATION MEETINGS

A. Preinstallation Conference: Conduct conference at Project site.

1.5 ACTION SUBMITTALS

A. Product Data: For each type of product.

1. Include construction details, material descriptions, dimensions of individual components and profiles, and finishes for display cases. Include furnished specialties and accessories.
2. Include electrical characteristics for illuminated display cases.

B. Shop Drawings: For display cases.

1. Include plans, elevations, sections, and attachment details.
2. Show location of seams and joints in tack board panels.
3. Include sections of typical trim members.

4. Include diagrams for wiring of illuminated display cases.

C. Samples: For each exposed product and for each color and texture specified; not less than 8-1/2 by 11 inches for tack board panels and 6 inches long for trim with factory finish.

D. Samples for Initial Selection: For each type of exposed finish.

1. Include Samples of tack board panels and factory-finished trim involving color finish selection.

E. Samples for Verification: For each type of exposed finish for the following:

1. Tack Board Panel: Not less than 8-1/2 by 11 inches, with facing and substrate indicated for final Work. Include one panel for each type, color, and texture required.

1.6 INFORMATIONAL SUBMITTALS

A. Product Test Reports: For tackboard panels, for tests performed by a qualified testing agency.

1.7 CLOSEOUT SUBMITTALS

A. Maintenance Data: For display cases to include in maintenance manuals.

1.8 PROJECT CONDITIONS

A. Environmental Limitations: Do not deliver or install display cases for indoor installations until spaces are enclosed and weathertight, wet-work in spaces is complete and dry, work above ceilings is complete, and temporary HVAC system is operating and maintaining ambient temperature and humidity conditions at occupancy levels during the remainder of the construction period.

B. Field Measurements: Whenever possible, verify actual dimensions of openings for display cases by field measurements before fabrication. If not possible to verify actual field dimensions, coordinate required opening dimensions and other requirements for display units with applicable trades to ensure proper fit and anchorage upon arrival to Project site.

PART 2 - PRODUCTS

2.1 MANUFACTURERS

A. Source Limitations: Obtain display cases, as well as directories, from single source from single manufacturer.

B. Manufacturers: Subject to compliance with requirements, available manufacturers offering products that may be incorporated into the Work include, but are not limited to, the following:

1. A-1 Visual Systems.
2. Claridge Products and Equipment, Inc.
3. Ghent Manufacturing, Inc.
4. Platinum Visual Systems; a division of ABC School Equipment, Inc.
5. Poblocki Sign Company.
6. PolyVision Corporation; a Steelcase company.
7. Stargazer Display Cases, Pyramid Presentation Products.
8. Tablet & Ticket Co. (The).

2.2 PERFORMANCE REQUIREMENTS

A. Surface-Burning Characteristics: Comply with ASTM E 84; testing by a qualified testing agency. Identify products with appropriate markings of applicable testing agency.

1. Flame-Spread Index: 25 or less.
2. Smoke-Developed Index: 450 or less.

B. Electrical Components: Listed and labeled as defined in NFPA 70, by a qualified testing agency, and marked for intended location and application.

2.3 DISPLAY CASE

A. Recessed Display Case: Factory-fabricated display case; with finished interior, operable glazed doors at front, and extruded aluminum trim on face to cover edges of recessed opening.

1. Display Case Cabinet: Extruded aluminum, finished with plastic laminate-clad plywood at bottom and both sides.

a. Colors: Plastic laminate colors and patterns, including wood-grain patterns, to be selected by the Architect from Formica or Wilsonart's full range.

2. Face Frame: Aluminum.
3. Aluminum Finish: Full selection of colors to be selected by architect.

B. Glazed Sliding Doors: Tempered glass; unframed; with extruded-aluminum top and bottom track; supported on nylon or ball-bearing rollers; with plastic top guide and rubber bumpers. Equip each door with ground finger pull and adjustable cylinder lock with two keys.

1. Thickness: Not less than 6 mm thick.
2. Number of Doors: As indicated on Drawings; if not indicated, as follows:

a. For cases up to 6 feet wide: One pair of equal doors.
b. For cases up to 10 feet wide: Two pairs of equal doors.

C. Vinyl Back Panel: Vinyl-fabric-faced tackboard panel.

D. Back Panel: Where indicated, 6-mm-thick tempered glass in extruded aluminum frame, with freestanding intermediate extruded aluminum tubular supports, in quantity as required by manufacturer for supporting shelf standards and brackets.

E. Shelves: 6-mm-thick tempered glass; supported on adjustable shelf standards and supports.

1. Shelf Depth: 12 inches, unless otherwise indicated.
2. Number of Shelves: Three, unless larger quantity is indicated on Drawings.

F. Adjustable Shelf Standards and Supports: BHMA A156.9, B04102; with shelf brackets, B04112; recess mounted in rear surface. Provide standards extending full height of display case.

1. Where display cases are indicated to consist of glazed front and rear panels, mount shelf standards to extruded aluminum tubular supports, for full height of display case.

G. Illumination System: Concealed top-lighting system consisting of LED-strip fixtures. Include lamps and internal wiring with single concealed electrical connection to building system. Coordinate electrical characteristics with power supply provided.

1. Drivers: Low-temperature, high-power-factor, low-energy, UL listed, LED drivers.

a. Electrical Characteristics: Single phase, 110V; if manufacturer cannot provide these electrical characteristics, the General Contractor shall be responsible for the costs required for any required electrical revisions.

H. Sizes: As indicated on Drawings.

2.4 TACK BOARD PANELS

A. Vinyl-Fabric-Faced Tackboard Panel: 1/8-inch-thick, vinyl-fabric-faced-cork sheet factory laminated to 3/8-inch-thick, fiberboard backing.

2.5 MATERIALS

A. Hardboard: ANSI A135.4, tempered.

B. Hardwood Plywood: HPVA HP-1.

C. Vinyl Fabric: Provide the following:

1. Manufacturer: Carnegie-Xorel
2. Series: Meteor.
3. Fabric: 16-oz-per-linear-yard, 100% IRP Xorel.
4. Backing: X-Protect Wall microvent.
5. Flammability: ASTM E84 Class A/Class 1.
6. Cleaning: Water/Solvent and Bleach Cleanable.
7. Width: 52 inches

8. Colors: As selected by the Architect from the manufacturer's range of standard colors. Provide a minimum of (80) colors.

D. Extruded-Aluminum Bars and Shapes: ASTM B 221, Alloy 6063.

E. Aluminum Tubing: ASTM B 429, Alloy 6063.

F. Clear Tempered Glass: ASTM C 1048, Kind FT, Condition A, Type I, Class 1, Quality Q3, with exposed edges seamed before tempering.

G. High-Pressure Plastic Laminate: NEMA LD 3.

H. Fasteners: Provide screws, bolts, and other fastening devices made from same material as items being fastened, except provide hot-dip galvanized, stainless-steel, or aluminum fasteners for exterior applications. Provide types, sizes, and lengths to suit installation conditions. Use security fasteners where exposed to view.

2.6 FABRICATION

A. Fabricate display cases to requirements indicated for dimensions, design, and thickness and finish of materials.

B. Use metals and shapes of thickness and reinforcing required to produce flat surfaces, and to impart strength for size, design, and application indicated.

C. Fabricate cabinets and door frames with reinforced corners, mitered to a hairline fit, with no exposed fasteners.

D. Fabricate shelf standards plumb and at heights to align shelf brackets for level shelves.

2.7 GENERAL FINISH REQUIREMENTS

A. Comply with NAAMM's "Metal Finishes Manual for Architectural and Metal Products" for recommendations for applying and designating finishes.

B. Protect mechanical finishes on exposed surfaces from damage by applying a strippable, temporary protective covering before shipping.

C. Appearance of Finished Work: Noticeable variations in same piece are unacceptable. Variations in appearance of adjoining components are acceptable if they are within the range of approved Samples and are assembled or installed to minimize contrast.

2.8 ALUMINUM FINISHES

A. Full selection of color selections, one of the color selections shall be Dark Bronze, No. 40.

PART 3 - EXECUTION

3.1 EXAMINATION

A. Examine walls, with Installer present, for compliance with requirements for installation tolerances, surface conditions of wall, and other conditions affecting performance of the Work.

B. Examine roughing-in for electrical power systems to verify actual locations of connections before installation of illuminated units.

C. Examine walls and partitions for proper backing for display cases.

D. Examine walls and partitions for suitable framing depth if recessed units will be installed.

E. Proceed with installation only after unsatisfactory conditions have been corrected.

3.2 PREPARATION

A. Prepare recesses for display cases as required by type and size of unit.

3.3 INSTALLATION

A. General: Install units in locations and at mounting heights indicated on Drawings. Keep perimeter lines straight, level, and plumb. Provide grounds, clips, backing materials, adhesives, brackets, anchors, trim, and accessories necessary for complete installation.

B. Recessed Display Cases: Attach units to masonry openings with concealed wood blocking or to wall framing with fasteners at not more than 16 inches o.c. Attach aluminum trim over edges of recessed display cases and conceal grounds and clips. Attach trim with fasteners at not more than 24 inches o.c.

C. Comply with requirements specified elsewhere for connecting illuminated display cases.

D. Install display case shelving level and straight.

3.4 ADJUSTING AND CLEANING

A. Adjust doors to operate smoothly without warp or bind and so contact points meet accurately. Lubricate operating hardware as recommended by manufacturer.

B. Touch up factory-applied finishes to restore damaged areas.

END OF SECTION 101200

SECTION 101419 - DIMENSIONAL LETTER SIGNAGE

PART 1 - GENERAL

1.1 RELATED DOCUMENTS

A. Drawings and general provisions of the Contract, including General and Supplementary Conditions and Division 01 Specification Sections, apply to this Section.

1.2 SUMMARY

A. Section includes cast and cutout dimensional characters.

1.3 ACTION SUBMITTALS

A. Product Data: For each type of product.

B. Shop Drawings: For dimensional letter signs.

1. Include fabrication and installation details and attachments to other work. Include floor plan of each building, indicating location of each sign and cross-referencing the sign schedule information.
2. Show sign mounting heights, locations of supplementary supports to be provided by others, and accessories.
3. Show message list, typestyles, graphic elements, and layout for each sign at a scale of at least 1 inch equaling 1 foot.

C. Samples for Initial Selection: For each type of sign assembly, exposed component, and exposed finish.

1. Include representative Samples of available typestyles and graphic symbols.

D. Samples for Verification: For each type of sign assembly showing all components and with the required finish, in manufacturer's standard size unless otherwise indicated and as follows:

1. Dimensional Characters: Full-size or half-size Sample of each type of dimensional character.
2. Exposed Accessories: Full-size Sample of each accessory type.

E. Sign Schedule: Use same designations specified or indicated on Drawings or in a sign schedule.

1.4 INFORMATIONAL SUBMITTALS

A. Qualification Data: For Installer and manufacturer.

B. Sample Warranty: For special warranty.

1.5 CLOSEOUT SUBMITTALS

A. Maintenance Data: For signs to include in maintenance manuals.

1.6 QUALITY ASSURANCE

A. Installer Qualifications: Manufacturer of products or an entity that employs installers and supervisors who are trained and approved by manufacturer.

1.7 FIELD CONDITIONS

A. Field Measurements: Verify locations of electrical service embedded in permanent construction by other installers by field measurements before fabrication, and indicate measurements on Shop Drawings.

1.8 WARRANTY

A. Special Warranty: Manufacturer agrees to repair or replace components of signs that fail in materials or workmanship within specified warranty period.

1. Failures include, but are not limited to, the following:

a. Deterioration of finishes beyond normal weathering.
b. Separation or delamination of sheet materials and components.

2. Warranty Period: Five years from date of Substantial Completion.

PART 2 - PRODUCTS

2.1 DIMENSIONAL CHARACTERS

A. Available Manufacturers: Subject to compliance with requirements, manufacturers offering products that may be incorporated into the Work include, but are not limited to, the following:

a. In Pro.
b. ASI Sign Systems, Inc.
c. Bayuk Graphic Systems, Inc.
d. Bunting Graphics, Inc.
e. Gemini Incorporated.
f. Metal Arts; Div. of L&H Mfg. Co.
g. Mohawk Sign Systems.
h. 4 Sign Solutions.

B. Cast Characters: Characters with uniform faces, sharp corners, and precisely formed lines and profiles, and as follows:

1. Character Material: Cast aluminum.
2. Character Height: As indicated.

3. Thickness: 1 inch thick, or thicker if determined by manufacturer.
4. Integral Aluminum Finish: Clear anodized.
5. Mounting:
    a. Wall Surfaces: Projecting studs.
    b. Roof Edges: Concealed, aluminum angles and brackets, with concealed bolts, nuts and washers as needed to anchor letters.
    c. Other mounting requirements, as specifically detailed on Drawings.
6. Typeface: Arial Font, unless otherwise indicated.

C. Cutout Characters: Characters with uniform faces; square-cut, smooth**,** eased edges; precisely formed lines and profiles; and as follows:

1. Character Material: Sheet or plate aluminum.
2. Character Height: As indicated.
3. Thickness: 0.25 inch.
4. Integral Aluminum Finish: Clear anodized.
5. Mounting:
    a. Wall Surfaces: Projecting studs.
    b. Roof Edges: Concealed, aluminum angles and brackets, with concealed adhesive or other means as necessary to anchor letters.
    c. Other mounting requirements, as specifically detailed on Drawings.
6. Typeface: Helvetica, unless otherwise indicated.

2.2 DIMENSIONAL CHARACTER MATERIALS

A. Aluminum Castings: ASTM B 26, alloy and temper recommended by sign manufacturer for casting process used and for type of use and finish indicated.

B. Aluminum Sheet and Plate: ASTM B 209, alloy and temper recommended by aluminum producer and finisher for type of use and finish indicated.

C. Aluminum Extrusions: ASTM B 221, alloy and temper recommended by aluminum producer and finisher for type of use and finish indicated.

2.3 ACCESSORIES

A. Fasteners and Anchors: Manufacturer's standard as required for secure anchorage of signage, noncorrosive and compatible with each material joined, and complying with the following:

1. Use concealed fasteners and anchors unless indicated to be exposed.
2. For exterior exposure, furnish nonferrous-metal, stainless-steel or hot-dip galvanized devices unless otherwise indicated.
3. Sign Mounting Fasteners:

a. Concealed Studs: Concealed (blind), threaded studs welded or brazed to back of sign material, screwed into back of sign assembly, or screwed into tapped lugs cast integrally into back of cast sign material, unless otherwise indicated.
b. Projecting Studs: Threaded studs with sleeve spacer, welded or brazed to back of sign material, screwed into back of sign assembly, or screwed into tapped lugs cast integrally into back of cast sign material, unless otherwise indicated.
c. Through Fasteners: Metal fasteners only exposed to non-viewing side of letters, attached to brackets and matching sign finish, with type of head indicated, installed in predrilled holes.

B. Adhesive: Industrial strength, high-bond type, as recommended by sign manufacturer.

C. Bituminous Paint: Cold-applied asphalt emulsion complying with ASTM D 1187.

2.4 FABRICATION

A. General: Provide manufacturer's standard sign assemblies according to requirements indicated.

1. Preassemble signs and assemblies in the shop to greatest extent possible. Disassemble signs and assemblies only as necessary for shipping and handling limitations. Clearly mark units for reassembly and installation; apply markings in locations concealed from view after final assembly.
2. Mill joints to a tight, hairline fit. Form assemblies and joints exposed to weather to resist water penetration and retention.
3. Comply with AWS for recommended practices in welding and brazing. Provide welds and brazes behind finished surfaces without distorting or discoloring exposed side. Clean exposed welded and brazed connections of flux, and dress exposed and contact surfaces.
4. Conceal connections if possible; otherwise, locate connections where they are inconspicuous.
5. Internally brace signs for stability and for securing fasteners.
6. Provide rebates, lugs, and brackets necessary to assemble components and to attach to existing work. Drill and tap for required fasteners. Use concealed fasteners where possible; use exposed fasteners that match sign finish.
7. Castings: Fabricate castings free of warp, cracks, blowholes, pits, scale, sand holes, and other defects that impair appearance or strength. Grind, wire brush, sandblast, and buff castings to remove seams, gate marks, casting flash, and other casting marks before finishing.

B. Brackets: Fabricate brackets, fittings, and hardware for bracket-mounted signs to suit sign construction and mounting conditions indicated. Modify manufacturer's standard brackets as required.

1. Aluminum Brackets: Aluminum angles, plates or bars, matching finish of letters. Provide in thicknesses and dimensions as indicated, or if not indicated, as required to adequately secure and display letters. Coat surfaces that will be in contact with dissimilar metals with bituminous paint or other method to prevent galvanic action.

2.5 GENERAL FINISH REQUIREMENTS

A. Protect mechanical finishes on exposed surfaces from damage by applying a strippable, temporary protective covering before shipping.

B. Appearance of Finished Work: Noticeable variations in same piece are not acceptable. Variations in appearance of adjoining components are acceptable if they are within the range of approved Samples and are assembled or installed to minimize contrast.

C. Organic, Anodic, and Chemically Produced Finishes: Apply to formed metal after fabrication but before applying contrasting polished finishes on raised features unless otherwise indicated.

2.6 ALUMINUM FINISHES

A. Clear Anodic Finish: AAMA 611, Class I, 0.018 mm or thicker.

PART 3 - EXECUTION

3.1 EXAMINATION

A. Examine substrates, areas, and conditions, with Installer present, for compliance with requirements for installation tolerances and other conditions affecting performance of signage work.

B. Verify that sign-support surfaces are within tolerances to accommodate signs without gaps or irregularities between backs of signs and support surfaces unless otherwise indicated.

C. Verify that electrical service is correctly sized and located to accommodate signs.

D. Proceed with installation only after unsatisfactory conditions have been corrected.

3.2 INSTALLATION

A. General: Install signs using mounting methods indicated and according to manufacturer's written instructions.

1. Install signs level, plumb, true to line, and at locations and heights indicated, with sign surfaces free of distortion and other defects in appearance.
2. Before installation, verify that sign surfaces are clean and free of materials or debris that would impair installation.
3. Corrosion Protection: Coat concealed surfaces of exterior aluminum in contact with grout, concrete, masonry, wood, or dissimilar metals, with a heavy coat of bituminous paint.

B. Mounting Methods:

1. Concealed Studs: Using a template, drill holes in substrate aligning with studs on back of sign. Remove loose debris from hole and substrate surface.
    a. Masonry Substrates: Fill holes with adhesive. Leave recess space in hole for displaced adhesive. Place sign in position and push until flush to surface, embedding studs in holes. Temporarily support sign in position until adhesive fully sets.
    b. Thin or Hollow Surfaces: Place sign in position and flush to surface, install washers and nuts on studs projecting through opposite side of surface, and tighten.
2. Projecting Studs: Using a template, drill holes in substrate aligning with studs on back of sign. Remove loose debris from hole and substrate surface.
    a. Masonry Substrates: Fill holes with adhesive. Leave recess space in hole for displaced adhesive. Place spacers on studs, place sign in position, and push until spacers are pinched between sign and substrate, embedding the stud ends in holes. Temporarily support sign in position until adhesive fully sets.
    b. Thin or Hollow Surfaces: Place spacers on studs, place sign in position with spacers pinched between sign and substrate, and install washers and nuts on stud ends projecting through opposite side of surface, and tighten.
3. Through Fasteners: Drill holes in substrate using predrilled holes in sign as template. Countersink holes in sign if required. Place sign in position and flush to surface. Install through fasteners and tighten.
4. Angles, Bars and Brackets: Remove loose debris from substrate surface and install angle, bar or bracket supports in position so that signage is correctly located and aligned.

3.3 ADJUSTING AND CLEANING

A. Remove and replace damaged or deformed characters and signs that do not comply with specified requirements. Replace characters with damaged or deteriorated finishes or components that cannot be successfully repaired by finish touchup or similar minor repair procedures.

B. Remove temporary protective coverings and strippable films as signs are installed.

C. On completion of installation, clean exposed surfaces of signs according to manufacturer's written instructions, and touch up minor nicks and abrasions in finish. Maintain signs in a clean condition during construction and protect from damage until acceptance by Owner.

END OF SECTION 101419

SECTION 101423 – PANEL SIGNAGE

PART 1 - GENERAL

1.1 RELATED DOCUMENTS

A. Drawings and general provisions of the Contract, including General and Supplementary Conditions and Division 1 Specification Sections, apply to this Section.

1.2 SUMMARY

A. This Section includes:

1. Interior and Exterior Panel Signs.

B. Related Requirements:

1. Division 1 Section "Temporary Facilities & Controls" for temporary Project identification signs.
2. Division 10 Section “Dimensional Signage” for cut metal letters.
3. Division 10 Section “Plaques” for cast aluminum building dedication plaque.

1.3 ACTION SUBMITTALS

A. Product Data: For each type of sign specified, including details of construction relative to materials, dimensions of individual components, profiles, and finishes.

B. Shop Drawings: For panel signs, showing fabrication and erection of signs. Include plans, elevations, and large-scale sections of typical members and other components. Show anchors, layout, reinforcement, accessories, and installation details.

1. Details: Provide message list for each type of sign required, including typestyles, graphic elements, including raised characters and Braille, and layout for each sign at least half size. Include large-scale details of nomenclature, including layout of room names, room numbers and graphic symbols, as indicated. Elevation details shall be consistent with sign type number on Drawings.
2. **Floor Plans: Provide floor plans showing locations of each sign, indicating original room name, room number, and sign type.**
3. Signage Schedule: Provide signage schedule in an editable version of Microsoft® Excel® format (.xlsx or .xls) or similar, compatible software. Arrange per building, building floor and building area, in a sequential manner that is consistent with the Drawings. Each room shall consist of a horizontal line of information, which shall intersect with vertical columns, in which applicable information may be input into each cell. Provide the following column heading information, which may be abbreviated as needed, formatted from left to right:
   a. Original Room Number: As indicated on Contract Drawings.
   b. Original Room Name: As indicated on Contract Drawings.
   c. Revised Room Number: Final information to be fabricated; any revisions shall be input by the Architect.

d. Revised Room Name: Final information to be fabricated; any revisions shall be input by the Architect.
e. Sign Type: To cross-reference Shop Drawing elevation details.
f. Sign Size: To indicate overall sign width and height.
g. Accessibility: To include International Symbol of Access (ISA).
h. Female: To include International Symbol for Female Gender.
i. Male: To include International Symbol for Male Gender.
j. Neutral: To include International Symbol for Gender-Neutral.
k. Family: To include International Symbol for Family.
l. Miscellaneous: To include, and make reference to, additional graphic symbols, including, but not limited to, directional arrows, stairs, and fire, as well as other signage features, such as paper inserts and sliding vacant/in use types.
m. Quantity: Indicate number of same panel sign design required for specific room; provide additional lines for rooms that are to have more than one sign, but require different design or sign type.
n. Remarks: For providing additional notes or remarks; by manufacturer (in black font color), Contractor (in green font color) or Architect (in red font color).

4. For signs supported by or anchored to permanent construction, provide setting drawings, templates, and directions for installation of anchor bolts and other anchors to be installed as a unit of Work in other Sections.

C. Samples for Initial Selection: For each type of sign assembly, exposed component, and exposed finish.

1. Cast Acrylic Sheet: Manufacturer's color Samples consisting of actual sections or chips of material, including the full range of standard colors, patterns and textures available.
2. Panel Signs: (1) Full-size Sample, not less than 12 inches square, including corners, for verification of basic design.
3. Exposed Accessories: Full-size Sample of each accessory type.

1.4 INFORMATIONAL SUBMITTALS

A. Qualification Data: For Installer and manufacturer.

B. Sample Warranty: For special warranty.

1.5 CLOSEOUT SUBMITTALS

A. Maintenance Data: For signs to include in maintenance manuals.

1.6 QUALITY ASSURANCE

A. Sign Fabricator Qualifications: Firm experienced in producing signs similar to those indicated for this Project, with a record of successful in-service performance, and sufficient production capacity to produce sign units required without causing delay in the Work.

B. Single-Source Responsibility: For each separate sign type required, obtain signs from one source of a single manufacturer.

C. Design Concept: The Drawings indicate profile and dimensional requirements of panel signs. Slight deviations in profiles and dimensions may be approved, as long as such deviations do not drastically change the design concept, as judged by the Architect. The burden of proof of equality is on the Bidder.

1.7 PROJECT CONDITIONS

A. Field Measurements: Whenever possible, and if necessary, take field measurements prior to the preparation of Shop Drawings and fabrication to ensure proper fitting. Show recorded measurements on final Shop Drawings. Coordinate fabrication schedule with construction progress to avoid delay.

1.8 WARRANTY

A. When warranties are required, verify with Owner's counsel that warranties stated in this article are not less than remedies available to Owner under prevailing local laws.

1. Special Warranty: Manufacturer agrees to repair or replace components of signs that fail in materials or workmanship within specified warranty period.

a. Failures include, but are not limited to, the following:

1) Deterioration of finishes beyond normal weathering.
2) Deterioration of embedded graphic image.
3) Separation or delamination of sheet materials and components.

2. Warranty Period: Five years from date of Substantial Completion.

PART 2 - PRODUCTS

2.1 MANUFACTURERS

A. Available Manufacturers: Subject to compliance with requirements, manufacturers offering panel signage products that may be incorporated in the Work include, but are not limited to, the following:

1. 4Sign Solutions.
2. iSigns Inc.
3. Best Manufacturing.
4. Bayuk Graphics.
5. HES Sign.

2.2 FRAMELESS PANEL SIGNS

A. Cast Acrylic Sheet: ASTM D 4802; non-extruded, non-continuous-cast polymethyl methacrylate monomer (PMMA) or extruded polyvinyl chloride (PVC)-acrylic alloy sheet, Type UVF (UV filtering); in sizes and thicknesses indicated, with a minimum flexural strength of 16,000 psi when tested according to ASTM D 790, with a minimum allowable continuous service temperature of 176 deg F, and of the following general types:

1. Opaque Sheet: Where sheet material is indicated as "opaque," provide colored, solid acrylic sheet in colors and finishes as selected from the manufacturer's full range of standard colors and textures.
2. Colored Coatings: Use colored coatings, including inks and paints for copy and background colors that are recommended by acrylic manufacturer for optimum adherence to acrylic surface and are non-fading for the application intended.

B. Fasteners: Use concealed fasteners fabricated from metals that are not corrosive to and compatible with the sign material and mounting surface.

C. Frameless Panel Signs: Comply with requirements indicated for materials, thicknesses, finishes, colors, designs, shapes, sizes, and details of construction.

1. Construction: Fabricate smooth, flush panel surfaces, capable of remaining flat with no noticeable distortions, while subjected to installed environmental conditions, within a tolerance of plus or minus 1/16 inch, measured diagonally.
2. Laminated Sign Panels: Permanently laminate face panels to backing sheets of material and thickness indicated using the manufacturer's standard process.
3. Engraved Copy: Machine-engrave letters, numbers, symbols, and other graphic devices into sign panel on the face indicated to produce precisely formed copy, incised to uniform depth. Use high-speed cutters mechanically linked to master templates in a pantographic system or equivalent process capable of producing characters of the style indicated with sharply-formed edges.
   a. Copy Depth: Character, graphic and Braille copy shall be raised 1/32 inch, unless otherwise indicated.
   b. Lettering Style: Upper- and lower-case letters; as selected by Architect from manufacturer’s full range of standard typefaces.
4. Characters and Graphics: Unless otherwise indicated, fabricate signs with 1-inch-high room numbers and 3/4-inch-high room identification lettering. Standard grade Braille shall be located 1/2 inch below copy.
   a. Accessibility Standards: Comply with applicable provisions in the U.S. Architectural & Transportation Barriers Compliance Board’s ADA-ABA Accessibility Guidelines for Buildings and Facilities and ICC A117.1 for signs. All signage shall comply with accessibility requirements, including International Symbol of Access, Braille, and provisions for mounting.
   b. Final room numbering and verbiage designations for all signs shall be approved by Owner prior to fabrication.
5. Edge Condition: Square, non-beveled.
6. Edge Color: Same as background.

7. Corner Condition: Square, non-rounded.
8. Sign Types: Refer to drawings.
9. Extra Signs: Provide an additional quantity of (15) 8”x8”.

D. Graphic Content and Style: Provide sign copy that complies with the requirements indicated for size, style, spacing, content, position, material, finishes, and colors of letters, numbers, and other graphic devices.

1. Signs shall consist of internationally-adopted graphic silhouette symbols indicating entrances to male, female, gender-neutral, and family restrooms, as well as handicapped-accessibility, where occurs.
2. Provide signs at the entrances of all non-accessible restrooms that graphically indicate the directions to the nearest handicapped-accessible restrooms.

E. Signs with Changeable Message Capability: Fabricate signs to allow insertion of changeable messages as follows:

1. For snap-in changeable inserts beneath removable face sheet, furnish one suction or other device to assist in removing face sheet. Furnish initial changeable insert. Furnish two blank inserts for each sign for Owner's use.
2. For slide-in changeable inserts, fabricate slot without burrs or constrictions that inhibit function. Furnish initial changeable insert.

2.3 FRAMELESS EXTERIOR METAL PANEL SIGNS

A. Solid-Sheet Sign: Aluminum sign panel with Aluminum raised graphics.

1. Aluminum Sheet to meet ASTM B 209.
2. Thickness: 0.25 inch
3. Finish: Brushed
4. Sign shall be etched and receive filled graphics: Sign face etched or routed to receive enamel-paint infill.
5. Type 5A, Provide a quantity of 4 of 8” by 8” signs, verbiage to be determined.

2.4 FINISHES

A. Colors and Surface Textures: For exposed sign material that requires selection of materials with integral or applied colors, surface textures or other characteristics related to appearance, provide colors as selected by the Architect from the manufacturer's full range of standard colors and textures.

1. Manufacturer shall offer no less than (25) colors.

B. Aluminum Extrusions: ASTM B221 (ASTM B221M), alloy and temper recommended by aluminum producer and finisher for type of use and finish indicated.

2.5 ACCESSORIES

A. Fasteners and Anchors: Manufacturer's standard as required for secure anchorage of signs, noncorrosive and compatible with each material joined. Use concealed fasteners and anchors unless indicated to be exposed.

B. Adhesive: As recommended by sign manufacturer.

C. Two-Face Tape: Manufacturer's standard high-bond, foam-core tape, 0.045 inch thick, with adhesive on both sides.

PART 3 - EXECUTION

3.1 EXAMINATION

A. Examine substrates, areas, and conditions, with Installer present, for compliance with requirements for installation tolerances and other conditions affecting performance of signage work.

B. Verify that sign-support surfaces are within tolerances to accommodate signs without gaps or irregularities between backs of signs and support surfaces unless otherwise indicated.

C. Verify that anchor inserts are correctly sized and located to accommodate signs.

D. Proceed with installation only after unsatisfactory conditions have been corrected.

3.2 INSTALLATION

A. General: Locate sign units and accessories where indicated, using mounting methods of the type described and in compliance with the manufacturer's instructions.

1. Install signs level, plumb, and at the height indicated, with sign surfaces free from distortion or other defects in appearance. All signs shall be mounted per accessibility standards, as required by the authorities having jurisdiction.
2. Install signs so they do not protrude or obstruct according to the accessibility standard.
3. Before installation, verify that sign surfaces are clean and free of materials or debris that would impair installation.
4. Corrosion Protection: Coat concealed surfaces of exterior aluminum in contact with grout, concrete, masonry, wood, or dissimilar metals, with a heavy coat of bituminous paint.

B. Accessible Signage: Install in locations on walls as indicated on Drawings and according to the accessibility standard.

C. Mounting Methods: Attach panel signs to surfaces, as follows:

1. Interior Surfaces: Use one of the following methods, as applicable:

a. Vinyl-covered or Rough Surfaces: Clean bond-breaking materials from substrate surface and remove loose debris. Apply linear beads or spots of high-bond adhesive symmetrically to back of sign and of suitable quantity to support weight of sign after cure without slippage. Keep adhesive away from edges to prevent adhesive extrusion as sign is applied and to prevent visibility of cured adhesive at sign edges. Place sign in position, and push to engage adhesive. Temporarily support sign in position until adhesive fully sets.

b. Smooth Surfaces: Clean bond-breaking materials from substrate surface and remove loose debris. Apply two-face tape strips symmetrically to back of sign and of suitable quantity to support weight of sign without slippage. Add silicone sealant as needed. Keep strips away from edges to prevent visibility at sign edges. Place sign in position, and push to engage tape adhesive.

2. Exterior Surfaces: Use through fasteners mounting; Drill holes in substrate using predrilled holes in sign as template. Countersink holes in sign if required. Place sign in position and flush to surface. Install through fasteners and tighten.

D. Signs Mounted on Glass: Provide opaque sheet matching sign material and finish onto opposite side of glass to conceal back of sign.

3.3 CLEANING AND PROTECTION

A. Remove protective coverings and strippable films as signs are installed. After installation, clean soiled sign surfaces according to the manufacturer's instructions. Protect units from damage until substantial completion.

B. Touch up minor nicks and abrasions; otherwise, remove and replaced damaged or deformed signs that do not comply with requirements.

END OF SECTION 101423

SECTION 102113 - TOILET COMPARTMENTS

PART 1 - GENERAL

1.1 RELATED DOCUMENTS

A. Drawings and general provisions of the Contract, including General and Supplementary Conditions and Division 01 Specification Sections, apply to this Section.

1.2 SUMMARY

A. Section includes solid-polymer toilet compartments configured as toilet enclosures and urinal screens.

B. Related Sections:

1. Division 6 Section "Rough Carpentry" for blocking.
2. Division 10 Section "Toilet and Bath Accessories" for toilet tissue dispensers, grab bars, disposals and similar accessories required to be mounted to toilet compartment panels.

1.3 ACTION SUBMITTALS

A. Product Data: For each type of product indicated. Include construction details, material descriptions, dimensions of individual components and profiles, and finishes.

B. Shop Drawings: For toilet compartments. Include plans, elevations, sections, details, and attachments to other work.

1. Show locations of cutouts for compartment-mounted toilet accessories.
2. Show locations of reinforcements for compartment-mounted grab bars.
3. Show locations of centerlines of toilet fixtures.

C. Samples for Initial Selection: For each type of unit indicated. Include Samples of hardware and accessories involving material and color selection.

1. Submit two (2) complete sets of color chip Samples of manufacturer’s full range of standard solid polymer partition colors and patterns, in manufacturer’s standard size, but not less than 2-inches-square.

D. Samples for Verification: For the following products, in manufacturer's standard sizes unless otherwise indicated:

1. Each type of material, color, and finish required for partitions, prepared on 4-inch- square Samples of same thickness and material indicated for Work.

1.4 INFORMATIONAL SUBMITTALS

A. Product Certificates: For each type of toilet compartment, from manufacturer.

1.5 CLOSEOUT SUBMITTALS

A. Maintenance Data: For toilet compartments to include in maintenance manuals.

1.6 QUALITY ASSURANCE

A. Comply with requirements in GSA's CID-A-A-60003, "Partitions, Toilets, Complete."

B. Surface-Burning Characteristics: As determined by testing identical products according to ASTM E 84, or another standard acceptable to authorities having jurisdiction, by a qualified testing agency. Identify products with appropriate markings of applicable testing agency.

1. Flame-Spread Index: 75 or less.
2. Smoke-Developed Index: 450 or less.

C. Regulatory Requirements: Comply with applicable provisions in the U.S. Architectural & Transportation Barriers Compliance Board's "Americans with Disabilities Act (ADA) and Architectural Barriers Act (ABA) Accessibility Guidelines for Buildings and Facilities" and ICC/ANSI A117.1 for toilet compartments designated as accessible.

1.7 PROJECT CONDITIONS

A. Field Measurements: Verify actual locations of toilet fixtures, walls, columns, ceilings, and other construction contiguous with toilet compartments by field measurements before fabrication.

PART 2 - PRODUCTS

2.1 MATERIALS

A. Aluminum Castings: ASTM B 26.

B. Aluminum Extrusions: ASTM B 221.

C. Stainless-Steel Sheet: ASTM A 666, Type 304, stretcher-leveled standard of flatness.

D. Stainless-Steel Castings: ASTM A 743.

E. Zamac: ASTM B 86, commercial zinc-alloy die castings.

2.2 SOLID-POLYMER UNITS

A. Basis-of-Design Product: Subject to compliance with requirements, provide Scranton Products (Santana/Comtec/Capitol) or comparable product by one of the following:

1. Bradley Corporation; Mills Partitions.
2. General Partitions Mfg. Corp.
3. Partition Systems Incorporated of South Carolina.
4. Sanymetal; a Crane Plumbing company.
5. Hadrian Manufacturing Inc.
6. Knickerbocker Partition Corporation.

B. Toilet-Enclosure Style: Overhead-braced.

C. Urinal-Screen Style: Wall-hung and floor-anchored.

D. Door, Panel and Pilaster Construction: Solid, high-density polyethylene (HDPE) panel material, not less than 1 inch thick, seamless, with eased edges, and with homogenous color and pattern throughout thickness of material.

1. Heat-Sink Strip: Manufacturer's standard continuous, extruded-aluminum or stainless-steel strip fastened to exposed bottom edges of solid-polymer components to prevent burning.
2. Color and Pattern: One color and pattern in each room as selected by Architect from manufacturer's full range.

E. Pilaster Shoes and Sleeves (Caps): Manufacturer's standard design; stainless steel.

F. Brackets (Fittings):

1. Full-Height (Continuous) Type: Manufacturer's standard design; extruded aluminum or stainless steel. Provide at all locations, unless uneven wall finishes or other substrates prevent the ability to adequately install continuous brackets. Refer to Drawings to determine bracket requirements.
2. Stirrup Type: Manufacturer’s standard design; chrome-plated Zamac steel. Provide only at locations in which uneven wall finishes or other substrates prevent the ability to install continuous brackets. Refer to Drawings to determine bracket requirements.

2.3 ACCESSORIES

A. Hardware and Accessories: Manufacturer's standard design, heavy-duty operating hardware and accessories.

1. Material: Chrome-plated Zamac or clear-anodized aluminum.
2. Hinges: Manufacturer's standard wrap-around paired, self-closing type that can be adjusted to hold doors open at any angle up to 90 degrees.

   a. As an alternative option to wrap-around hinges, provide continuous, cam type hinges that swing to a closed or partially open position.

3. Latch and Keeper: Manufacturer's standard surface-mounted latch unit designed for emergency access and with combination rubber-faced door strike and keeper. Provide units that comply with regulatory requirements for accessibility at compartments designated as accessible.
4. Coat Hook: Manufacturer's standard combination hook and rubber-tipped bumper, sized to prevent in-swinging door from hitting compartment-mounted accessories.
5. Door Bumper: Manufacturer's standard rubber-tipped bumper at out-swinging doors.
6. Door Pull: Manufacturer's standard unit at out-swinging doors that complies with regulatory requirements for accessibility. Provide units on both sides of doors at compartments designated as accessible.

B. Overhead Bracing: Manufacturer's standard continuous, extruded-aluminum head rail with anti-grip profile and in manufacturer's standard finish.

C. Anchorages and Fasteners: Manufacturer's standard exposed fasteners of stainless steel or chrome-plated steel or brass, finished to match the items they are securing, with theft-resistant-type heads. Provide sex-type bolts for through-bolt applications. For concealed anchors, use stainless steel, hot-dip galvanized steel, or other rust-resistant, protective-coated steel.

2.4 FABRICATION

A. Overhead-Braced Units: Provide manufacturer's standard corrosion-resistant supports, leveling mechanism, and anchors at pilasters to suit floor conditions. Provide shoes at pilasters to conceal supports and leveling mechanism.

B. Urinal-Screen Posts: Provide manufacturer's standard corrosion-resistant anchoring assemblies with leveling adjustment at tops and bottoms of posts. Provide shoes and sleeves (caps) at posts to conceal anchorage.

C. Door Size and Swings: Unless otherwise indicated, provide 24-inch-wide, in-swinging doors for standard toilet compartments and 36-inch-wide, out-swinging doors with a minimum 32-inch-wide, clear opening for compartments designated as accessible.

PART 3 - EXECUTION

3.1 INSTALLATION

A. General: Comply with manufacturer's written installation instructions. Install units rigid, straight, level, and plumb. Secure units in position with manufacturer's recommended anchoring devices.

1. Maximum Clearances:

   a. Pilasters and Panels: 1/2 inch.
   b. Panels and Walls: 1 inch.

B. Overhead-Braced Units: Secure pilasters to floor and level, plumb, and tighten. Set pilasters with anchors penetrating not less than 1-3/4 inches into structural floor unless otherwise indicated in manufacturer's written instructions. Secure continuous head rail to each pilaster with no fewer than two fasteners. Hang doors to align tops of doors with tops of panels, and adjust so tops of doors are parallel with overhead brace when doors are in closed position.

C. Urinal Screens: Attach with anchoring devices to suit supporting structure. Set units level and plumb, rigid, and secured to resist lateral impact.

3.2 ADJUSTING

A. Hardware Adjustment: Adjust and lubricate hardware according to hardware manufacturer's written instructions for proper operation. Set hinges on in-swinging doors to hold doors open approximately 30 degrees from closed position when unlatched. Set hinges on out-swinging doors to return doors to fully closed position.

END OF SECTION 102113

SECTION 102123 - CUBICLE TRACKS AND CURTAINS

PART 1 - GENERAL

1.1 RELATED DOCUMENTS

A. Drawings and general provisions of the Contract, including General and Supplementary Conditions and Division 01 Specification Sections, apply to this Section.

1.2 SUMMARY

A. This Section includes the following:

1. Cubicle curtain tracks and carriers.
2. Cubicle curtains.

B. Related Requirements:

1. Division 6 Section "Rough Carpentry" for supplementary wood framing and blocking for mounting items requiring anchorage.
2. Division 9 Section "Non-Structural Metal Framing" for supplementary metal framing and blocking for mounting items requiring anchorage.

1.3 SUBMITTALS

A. Product Data including durability, fade resistance, and fire-test-response characteristics for each type of curtain fabric specified.

B. Shop Drawings showing layout and types of cubicles, size of curtains, number of carriers, anchorage details, and conditions requiring accessories. Indicate dimensions taken from field measurements.

C. Coordination Drawings for reflected ceiling plans drawn accurately to scale and coordinating penetrations and ceiling-mounted items. Show the following:

1. Ceiling suspension assembly members.
2. Method of attaching cubicle curtain track hangers to building structure.
3. Ceiling-mounted items including light fixtures, diffusers, grilles, speakers, sprinklers, and access panels.

D. Samples: Contractor shall provide manufacturer’s color PDF images of mesh and curtain fabric for review & approval. Actual samples are NOT required unless specifically requested by the architect/interior designer.

E. Schedule of cubicles using same room designations indicated on Drawings.

F. Product certificates signed by manufacturers of cubicle tracks and curtains certifying that their products comply with specified requirements.

G. Maintenance data for cubicle tracks and curtains to include in the operation and maintenance manual specified in Division 1.

1.4 PROJECT CONDITIONS

A. Field Measurements: Verify dimensions by field measurements. Verify that tracks and curtains may be installed to comply with the original design and referenced standard.

B. Space Enclosure and Environmental Limitations: Do not install tracks and curtains until space is enclosed and weatherproof, wet-work in space is completed and nominally dry, and work above ceilings is complete.

PART 2 - PRODUCTS

2.1 MANUFACTURERS

A. Manufacturers: Subject to compliance with requirements of the Instructions to Bidders, manufacturers offering products that may be incorporated into the Work include, but are not limited to, the following:

1. Fabric:

a. Maharam

2. Mesh:

a. ADC Hospital Equipment.
b. Construction Specialties, Inc.
c. Nelson, A.R. Nelson Co., Inc.

2.2 CUBICLE TRACK

A. Track: Anodized, extruded aluminum.

1. Curved Track: Factory fabricated, not less than 12-inch- radius bends.
2. Splicing Clamp: Of same material and finish as track.

B. Track Mounting: Ceiling mounted; mechanically fastened to suspended ceiling grid.

1. Concealed Fasteners: Stainless steel.

C. Track Accessories: Provide end caps, connectors, end stops, coupling sleeves, wall brackets, and other accessories as required for secure and operational installation. Provide a quantity of carriers for 6-inch spacing the full length of the curtain plus 1 additional carrier.

1. Carriers: Nylon rollers and axle with chrome-plated steel hook.

2.3 CUBICLE CURTAINS

A. Fabric: Provide cubicle curtain fabrics with the following characteristics:

1. Fabrics are launderable to a temperature of not less than 160 deg F.
2. Fabrics are flame resistant and are identical to those that have passed NFPA 701 when tested by UL or another testing and inspecting agency acceptable to authorities having jurisdiction. Identify fabrics with appropriate markings of applicable testing and inspecting agency.

B. Curtain Top: Not less than 20-inch-wide nylon mesh with 1/2-inch-diameter holes. Overlap seams and double-lock stitch to body of curtain.

C. Provide curtains fabricated to comply with the following requirements:

1. Width: Equal to track length from which curtain is hung plus 10 percent, but not less than 12 inches.
2. Length: Equal to floor-to-ceiling height minus 18 inches from finished ceiling at top and 12 inches above finished floor.
3. Top Hem: Not less than 1 inch and not more than 1-1/2 inches wide, triple thickness, reinforced with integral web, and double stitched.

    a. Grommets: 2-piece, rolled-edge, rustproof, nickel-plated brass and spaced not more than 6 inches o.c.

4. Bottom and Side Hems: Not less than 1 inch wide, reinforced, triple thickness, and single stitched.
5. Seams: Not less than 1/2 inch wide, double turned and double stitched.

D. Curtain Drop: PVC strip with chrome-plated steel hook.

E. Curtain Tieback: At each termination.

F. Operating Wand: Fiberglass baton, not less than 30 inches long.

G. Cubicle Curtain Fabrics:

1. Manufacturer: Maharam.
2. Pattern: Sing 511490
3. Color: As selected by Architect from manufacturer’s full range.

PART 3 - EXECUTION

3.1 EXAMINATION

A. Examine ceilings for suitable conditions where cubicle track is to be installed.

B. Do not proceed until unsatisfactory conditions have been corrected.

3.2 INSTALLATION

A. Install cubicle curtain track level and plumb, according to manufacturer's written instructions and original design.

B. Install ceiling-mounted tracks at intervals of not less than 24 inches. Coordinate track installation with ceiling grid and lighting fixtures.

C. Install suspension-mounted tracks at intervals of not more than 48 inches. Secure ends of track to wall with flanged fittings. Fasten at each splice and the tangent point of each corner.

D. Center fastener in track to insure unencumbered carrier operation.

3.3 PROTECTION

A. Protect installed track opening with a non-residue adhesive tape to prevent debris from the ceiling finishing operation from impeding carrier operation.

END OF SECTION 102123

SECTION 102600 - WALL PROTECTION

PART 1 - GENERAL

1.1 RELATED DOCUMENTS

A. Drawings and general provisions of the Contract, including General and Supplementary Conditions and Division 01 Specification Sections, apply to this Section.

1.2 SUMMARY

A. Section Includes:

1. Fiberglass Reinforced Plastic Panels**.**

B. Related Sections include the following:

1. Division 6 Section “Rough Carpentry”.
2. Division 9 Section “Gypsum Board Assemblies”.

1.3 ACTION SUBMITTALS

A. Product Data: For each type of product.

1. Include construction details, material descriptions, impact strength, dimensions of individual components and profiles, and finishes.
2. Product data for each specified product. Include manufacturer’s technical data sheets and published instructions.

B. Shop Drawings: For each type of wall protection showing locations and extent.

1. Include plans, elevations, sections, and attachment details.
2. Show location and extent of each wall-covering type. Indicate installation instructions, installation diagram, panel sequence and termination points.
3. Anchorages to other construction, including requirements for concealed supports.
4. Use same unit designations used on Drawings.

C. Samples: Contractor shall provide manufacturer’s color PDF images fiberglass reinforced plastic panels and trim for review & approval. Actual samples are NOT required unless specifically requested by the architect/interior designer.

1.4 INFORMATIONAL SUBMITTALS

A. Product Certificates: For each type of handrail.

B. Material Certificates: For each type of exposed plastic material.

C. Sample Warranty: For special warranty.

1.5 CLOSEOUT SUBMITTALS

A. Maintenance Data: For each type of wall and door protection product to include in maintenance manuals.

1. Include recommended methods and frequency of maintenance for maintaining best condition of plastic covers under anticipated traffic and use conditions. Include precautions against using cleaning materials and methods that may be detrimental to finishes and performance.

1.6 MAINTENANCE MATERIAL SUBMITTALS

A. Furnish extra materials, from the same product run, that match products installed and that are packaged with protective covering for storage and identified with labels describing contents.

1. Perimeter Trim: Full-size plastic edge trim of maximum length equal to [2] percent of each type, color, and texture of cover installed, but no fewer than two, 96-inch-long units.

1.7 QUALITY ASSURANCE

A. Installer Qualifications: Engage an installer with no less than 3 years' experience in installation of systems similar in complexity to those required for this project.

B. Mock-Ups:

1. Build mockups to verify selections made under submittals and to demonstrate aesthetic effects, set quality for materials and construction, set quality standard for fabrication and installation.
2. Acceptable mock-ups may remain as part of the Work if undamaged at time of Substantial Completion.
3. Acceptable mock-ups shall be comparison standard for remaining Work.

1.8 DELIVERY, STORAGE, AND HANDLING

A. Store wall protection in original undamaged packages and containers inside well- ventilated area protected from weather, moisture, soiling, extreme temperatures, and humidity.

1. Maintain room temperature within storage area at not less than 70 deg F during the period plastic materials are stored.
2. Keep plastic materials out of direct sunlight.
3. Store plastic wall protection components for a minimum of 72 hours, or until plastic material attains a minimum room temperature of 70 deg F.
4. Package and ready materials according to manufacturer's instructions.
5. Store products inside building protected from light, heat and moisture and never store in contact with floor or outside wall surfaces. Do not expose to continuous direct sunlight.
   a. Store horizontally.
   b. Sheets must be handled by two people.
   c. Stored at a temperature per manufacturer's technical guide requirements.
6. Provide protective coverings of suitable material. Take special precautions at corners.

1.9 PROJECT CONDITIONS

A. Coordinate sizes and locations of cut-outs and other related Work specified in other Sections to ensure that interior laminate construction can be supported and installed as indicated.

1.10 WARRANTY

A. Special Warranty: Manufacturer agrees to repair or replace components of wall- and door-protection units that fail in materials or workmanship within specified warranty period.

1. Failures include, but are not limited to, the following:

   a. Structural failures including detachment of components from each other or from the substrates, delamination, and permanent deformation beyond normal use.
   b. Deterioration of metals, metal finishes, plastics, and other materials beyond normal use.

2. Warranty Period: Five years from date of Substantial Completion.

PART 2 - PRODUCTS

2.1 MANUFACTURERS

A. Source Limitations: Obtain decorative protection panels products of each type from single source from single manufacturer.

2.2 PERFORMANCE REQUIREMENTS

A. Surface Burning Characteristics: Comply with ASTM E 84 or UL 723; testing by a qualified testing agency. Identify products with appropriate markings of applicable testing agency.

1. Flame-Spread Index: 25 or less.
2. Smoke-Developed Index: 450 or less.

B. Regulatory Requirements: Comply with applicable provisions in the U.S. Architectural & Transportation Barriers Compliance Board's ADA-ABA Accessibility Guidelines for Buildings and Facilities and ICC A117.1.

2.3 FIRBERGLASS REINFORCED PLASTIC PANELS (FRP)

A. Manufacturers: Subject to compliance with requirements, provide product by one of the manufacturer specified.

1. Nudo, Standard FRP

B. Panel Thickness: 0.090 inch.

C. Panel Size: 4 feet by 8 feet.

D. Finish: Pebbled, Class A

E. Color: As selected by Architect from manufacturer’s full range of colors.

F. PVC Trim: M350 Inside Corner, M360 Outside Corner, M365 Division and M370 Edge

G. Location: Refer to Room Finish Schedule.

2.4 FABRICATION

A. Fabricate wall protection according to requirements indicated for design, performance, dimensions, and member sizes, including thicknesses of components.

B. Factory Assembly: Assemble components in factory to greatest extent possible to minimize field assembly. Disassemble only as necessary for shipping and handling.

C. Quality: Fabricate components with uniformly tight seams and joints and with exposed edges rolled. Provide surfaces free of wrinkles, chips, dents, uneven coloration, and other imperfections. Fabricate members and fittings to produce flush, smooth, and rigid hairline joints.

D. Adhesive: As recommended by protection product manufacturer.

1. Heavy-duty water-based mastic at an application rate of 125 sq ft/gal.

2.5 FINISHES

A. Protect finishes on exposed surfaces from damage by applying a strippable, temporary protective covering before shipping.

B. Appearance of Finished Work: Noticeable variations in same piece are not acceptable. Variations in appearance of adjoining components are acceptable if they are within the range of approved Samples and are assembled or installed to minimize contrast.

PART 3 - EXECUTION

3.1 EXAMINATION

A. Examine substrates and wall areas, with Installer present, for compliance with requirements for installation tolerances, fire rating, and other conditions affecting performance of the Work.

B. Examine walls to which wall protection will be attached for blocking, grounds, and other solid backing that have been installed in the locations required for secure attachment of support fasteners.

1. For wall protection attached with adhesive, verify compatibility with and suitability of substrates, including compatibility with existing finishes or primers.

C. Proceed with installation only after unsatisfactory conditions have been corrected.

3.2 PREPARATION

A. Complete finishing operations, including painting, before installing wall and door protection.

B. Before installation, clean substrate to remove dust, debris, and loose particles.

3.3 INSTALLATION

A. Installation Quality: Install wall protection according to manufacturer's written instructions, level, plumb, and true to line without distortions. Do not use materials with chips, cracks, voids, stains, or other defects that might be visible in the finished Work.

B. Mounting Heights: Install wall protection in locations and at mounting heights indicated on Drawings.

C. Fiberglass Reinforced Plastic Panels: Install edge caps at all perimeter locations, as required for a complete installation. Provide butt-joints between panels.

D. Accessories: Provide splices, mounting hardware, anchors, trim, joint moldings, and other accessories required for a complete installation per manufacturer’s written recommendations..

1. Provide anchoring devices and suitable locations to withstand imposed loads.
2. Adjust end and top caps as required to ensure tight seams.

3.4 CLEANING

A. Immediately after completion of installation, clean plastic covers and accessories using a standard ammonia-based household cleaning agent.

B. Remove excess adhesive using methods and materials recommended in writing by manufacturer.

END OF SECTION 102600

SECTION 102800 - TOILET ACCESSORIES

PART 1 - GENERAL

1.1 RELATED DOCUMENTS

A. Drawings and general provisions of the Contract, including General and Supplementary Conditions and Division 1 Specification Sections, apply to this Section.

1.2 SUMMARY

A. This Section includes toilet and bath accessory items as scheduled.

B. Toilet compartments and related accessories are specified in Division 10.

1.3 SUBMITTALS

A. General: Submit the following according to Conditions of the Contract and Division 1 Specification Sections.

B. Product data for each toilet accessory item specified, including construction details relative to materials, dimensions, gages, profiles, mounting method, specified options, and finishes.

C. Schedule indicating types, quantities, sizes, and installation locations (by room) for each toilet accessory item to be provided for project.

D. Setting drawings where cutouts are required in other work, including templates, substrate preparation instructions, and directions for preparing cutouts and installing anchorage devices.

E. Maintenance instructions including replaceable parts and service recommendations.

1.4 QUALITY ASSURANCE

A. Inserts and Anchorages: Furnish accessory manufacturers' standard inserts and anchoring devices that must be set in concrete or built into masonry. Coordinate delivery with other work to avoid delay.

B. Single-Source Responsibility: Provide products of same manufacturer for each type of accessory unit and for units exposed to view in same areas, unless otherwise acceptable to Architect.

1.5 PROJECT CONDITIONS

A. Coordination: Coordinate accessory locations, installation, and sequencing with other work to avoid interference with and ensure proper installation, operation, adjustment, cleaning, and servicing of toilet accessory items.

1.6 WARRANTY

A. Warranty: Submit a written warranty executed by mirror manufacturer, agreeing to replace any mirrors that develop visible silver spoilage defects within warranty period.

B. Warranty Period: 5 years from date of Substantial Completion.

C. The warranty shall not deprive the Owner of other rights the Owner may have under other provisions of the Contract Documents and will be in addition to and run concurrent with other warranties made by the Contractor under requirements of the Contract Documents.

PART 2 - PRODUCTS

2.1 ACCEPTABLE MANUFACTURERS

A. Available Manufacturers: Subject to compliance with requirements, manufacturers offering toilet accessories that may be incorporated in the Work include, but are not limited to, the following:

1. Bobrick Washroom Equipment, Inc.
2. Georgia Pacific
3. American Specialties, Inc.
4. Bradley Corporation

2.2 MATERIALS, GENERAL

A. Stainless Steel: AISI Type 302/304, with polished No. 4 finish, 0.034-inch (22-gage) minimum thickness.

B. Sheet Steel: Cold-rolled, commercial quality ASTM A366, 0.04-inch (20-gage) minimum. Surface preparation and metal pretreatment as required for applied finish.

C. Galvanized Steel Sheet: ASTM A 527, G60.

D. Chromium Plating: Nickel and chromium electro-deposited on base metal, ASTM B 456, Type SC 2.

E. Mirror Glass: Nominal 6.0-mm (0.23-inch) thick, conforming to ASTM C 1036, Type I, Class 1, Quality q2, and with silvering, electro-plated copper coating, and protective organic coating.

F. Galvanized Steel mounting Devices: ASTM A 153, hot-dip galvanized after fabrication.

G. Fasteners: Screws, bolts, and other devices of same material as accessory unit, or of galvanized steel where concealed.

2.3 TOILET ACCESSORY SCHEDULE

A. A Toilet Accessory Schedule on the drawings lists the types of accessories required. The schedule includes model numbers of specified items as manufactured by Bobrick, and identify those to be supplied by the Owner. The inclusion of these model numbers is to provide a guide as to quality, function, size and materials; they are not meant to be exclusionary or proprietary. Substitution of equal products by other manufacturers will be considered.

2.4 FABRICATION

A. General: Only a maximum 1-1/2-inch-diameter, unobtrusive stamped manufacturer logo, as approved by Architect, is permitted on exposed face of toilet or bath accessory units. On either interior surface not exposed to view or back surface, provide additional identification by either a printed, waterproof label or a stamped nameplate, indicating manufacturer's name and product model number.

B. Surface-Mounted Toilet Accessories, General: Except where otherwise indicated, fabricate units with tight seams and joints, exposed edges rolled. Hang doors or access panels with continuous stainless steel piano hinge. Provide concealed anchorage wherever possible.

C. Framed Mirror Units, General: Fabricate frames for glass mirror units to accommodate wood, felt, plastic, or other glass edge protection material. Provide mirror backing and support system that will permit rigid, tamperproof glass installation and prevent moisture accumulation.

D. Mirror Unit Hangers: Provide system for mounting mirror units that will permit rigid, tamperproof, and theftproof installation, as follows:

1. One-piece, galvanized-steel, wall-hanger device with spring-action locking mechanism to hold mirror unit in position with no exposed screws or bolts.

PART 3 - EXECUTION

3.1 INSTALLATION

A. Install toilet accessory units according to manufacturers' instructions, using fasteners appropriate to substrate as recommended by unit manufacturer. Install units plumb and level, firmly anchored in locations and at heights indicated.

B. Secure mirrors to walls in concealed, tamperproof manner with special hangers, toggle bolts,

or screws. Set units plumb, level, and square at locations indicated, according to manufacturer's instructions for type of substrate involved.

C. Install grab bars to withstand a downward load of at least 250 lbf, complying with ASTM F 446.

3.2 ADJUSTING AND CLEANING

A. Adjust toilet accessories for proper operation and verify that mechanisms function smoothly. Replace damaged or defective items.

B. Clean and polish all exposed surfaces strictly according to manufacturer's recommendations after removing temporary labels and protective coatings.

END OF SECTION 102800

SECTION 104413 - FIRE EXTINGUISHER CABINETS

PART 1 - GENERAL

1.1 RELATED DOCUMENTS

A. Drawings and general provisions of the Contract, including General and Supplementary Conditions and Division 01 Specification Sections, apply to this Section.

1.2 SUMMARY

A. Section includes fire protection cabinets for portable fire extinguishers.

B. Fire Extinguishers: Existing portable fire extinguishers that are to be removed from existing construction shall be relocated to the new fire extinguisher cabinets indicated in this Section or they shall be turned over to the Owner. In the event of there being a shortage of the types or quantities of portable fire extinguishers that are required for the Project, the Owner shall furnish and locate them in new fire extinguisher cabinets or onto Owner-provided wall-mounted brackets.

1.3 ACTION SUBMITTALS

A. Product Data: For each type of product indicated. Include construction details, material descriptions, dimensions of individual components and profiles, and finishes for fire protection cabinets.

1. Fire Protection Cabinets: Include roughing-in dimensions, details showing mounting methods, relationships of box and trim to surrounding construction, door hardware, cabinet type, trim style, and panel style.

B. Shop Drawings: For fire protection cabinets. Include plans, elevations, sections, details, and attachments to other work.

C. Product Schedule: For fire protection cabinets. Coordinate final fire protection cabinet schedule with fire extinguisher schedule to ensure proper fit and function.

1.4 CLOSEOUT SUBMITTALS

A. Maintenance Data: For fire protection cabinets to include in maintenance manuals.

1.5 QUALITY ASSURANCE

A. Preinstallation Conference: Conduct conference at Project site.

1. Review methods and procedures related to fire protection cabinets including, but not limited to, schedules and coordination requirements.

1.6 COORDINATION

A. Coordinate size of fire protection cabinets to ensure that type and capacity of fire extinguishers indicated are accommodated.

B. Coordinate sizes and locations of fire protection cabinets with wall depths.

PART 2 - PRODUCTS

2.1 MATERIALS

A. Cold-Rolled Steel Sheet: ASTM A 1008, Commercial Steel (CS), Type B.

B. Aluminum: Alloy and temper recommended by aluminum producer and manufacturer for type of use and finish indicated, and as follows:

1. Sheet: ASTM B 209.
2. Extruded Shapes: ASTM B 221.

C. Transparent Acrylic Sheet: ASTM D 4802, Category A-1 (cell-cast sheet), 3 mm or 6 mm thick, with Finish 1 (smooth or polished).

D. Acrylic Bubble: One piece.

2.2 FIRE PROTECTION CABINET

A. Cabinet Type: Suitable for fire extinguisher.

1. Available Products: Subject to compliance with requirements, available products that may be incorporated into the Work include, but are not limited to, the following:

a. J. L. Industries, Inc., a division of Activar Construction Products Group.
b. Kidde Residential and Commercial Division, Subsidiary of Kidde plc.
c. Larsen's Manufacturing Company.
d. Potter Roemer LLC.
e. Watrous Division, American Specialties, Inc.

B. Cabinet Construction: Nonrated type, to only be installed in nonrated walls.

C. Cabinet Material: Aluminum sheet on exterior, aluminum or steel sheet on interior.

D. Semirecessed Cabinet: Cabinet box partially recessed in walls of sufficient depth to suit style of trim indicated; with one-piece combination trim and perimeter door frame overlapping surrounding wall surface with exposed trim face and wall return at outer edge (backbend).

Provide where walls are of insufficient depth for recessed cabinets but are of sufficient depth to accommodate semirecessed cabinet installation.

1. Edge Trim: Either square-edge trim with 1-1/4- to 1-1/2-inch backbend depth, or rolled-edge trim with 2-1/2-inch to 4-1/2-inch backbend depth.

E. Cabinet Trim and Door Material: Aluminum sheet.

F. Door Style: Full bubble with frame.

G. Door Glazing: Molded acrylic bubble.

1. Acrylic Bubble Color: Clear transparent acrylic sheet.

H. Door Hardware: Manufacturer's standard door-operating hardware of proper type for cabinet type, trim style, and door material and style indicated.

1. Provide projecting lever handle with cam-action or friction latch.
2. Provide continuous hinge, of same material and finish as trim, permitting door to open 180 degrees.

I. Accessories:

1. Mounting Bracket: Manufacturer's standard steel, designed to secure fire extinguisher to fire protection cabinet, of sizes required for types and capacities of fire extinguishers indicated, with plated or baked-enamel finish.
2. Identification: Lettering complying with authorities having jurisdiction for letter style, size, spacing, and location.

a. Identify fire extinguisher in fire protection cabinet with the words "FIRE EXTINGUISHER" applied to cabinet glazing.

1) Application Process: Silk-screened or pressure-sensitive vinyl letters.
2) Lettering Color: Red.
3) Orientation: Vertical.

J. Finishes:

1. Manufacturer's standard baked-enamel paint for the interior of cabinet.
2. Aluminum Trim and Doors: Clear anodic.

2.3 FABRICATION

A. Fire Protection Cabinets: Provide manufacturer's standard box (tub) with trim, frame, door, and hardware to suit cabinet type, trim style, and door style indicated.

1. Weld joints and grind smooth.
2. Provide factory-drilled mounting holes.
3. Prepare doors and frames to receive locks.
4. Install door locks at factory.

B. Cabinet Doors: Fabricate doors according to manufacturer's standards, from materials indicated and coordinated with cabinet types and trim styles selected.

1. Fabricate door frames with tubular stiles and rails and hollow-metal design, minimum 1/2 inch thick.
2. Fabricate door frames of one-piece construction with edges flanged.
3. Miter and weld perimeter door frames.

C. Cabinet Trim: Fabricate cabinet trim in one piece with corners mitered, welded, and ground smooth.

2.4 GENERAL FINISH REQUIREMENTS

A. Comply with NAAMM's "Metal Finishes Manual for Architectural and Metal Products" for recommendations for applying and designating finishes.

B. Protect mechanical finishes on exposed surfaces of fire protection cabinets from damage by applying a strippable, temporary protective covering before shipping.

C. Finish fire protection cabinets after assembly.

D. Appearance of Finished Work: Noticeable variations in same piece are not acceptable. Variations in appearance of adjoining components are acceptable if they are within the range of approved Samples and are assembled or installed to minimize contrast.

2.5 ALUMINUM FINISHES

A. Clear Anodic Finish: AAMA 611, AA-M12C22A41, Class I, 0.018 mm or thicker.

2.6 STEEL FINISHES

A. Baked-Enamel or Powder-Coat Finish: Immediately after cleaning and pretreating, apply manufacturer's standard two-coat, baked-on finish consisting of prime coat and thermosetting topcoat. Comply with coating manufacturer's written instructions for applying and baking to achieve a minimum dry film thickness of 2 mils.

1. Color and Gloss: As selected by Architect from manufacturer's full range.

PART 3 - EXECUTION

3.1 EXAMINATION

A. Examine walls and partitions for suitable framing depth and blocking where semirecessed cabinets will be installed.

B. Proceed with installation only after unsatisfactory conditions have been corrected.

3.2 PREPARATION

A. Prepare recesses for semirecessed fire protection cabinets as required by type and size of cabinet and trim style.

3.3 INSTALLATION

A. General: Install fire protection cabinets in locations and at mounting heights indicated, in compliance with requirements of authorities having jurisdiction.

B. Fire Protection Cabinets: Fasten cabinets to structure, square and plumb.

1. Unless otherwise indicated, provide recessed fire protection cabinets. If wall thickness is not adequate for recessed cabinets, provide semirecessed fire protection cabinets.
2. Provide inside latch and lock for break-glass panels.
3. Fasten mounting brackets to inside surface of fire protection cabinets, square and plumb.

C. Identification: Apply vinyl lettering at locations indicated.

3.4 ADJUSTING AND CLEANING

A. Remove temporary protective coverings and strippable films, if any, as fire protection cabinets are installed unless otherwise indicated in manufacturer's written installation instructions.

B. Adjust fire protection cabinet doors to operate easily without binding. Verify that integral locking devices operate properly.

C. On completion of fire protection cabinet installation, clean interior and exterior surfaces as recommended by manufacturer.

D. Touch up marred finishes, or replace fire protection cabinets that cannot be restored to factory-finished appearance. Use only materials and procedures recommended or furnished by fire protection cabinet and mounting bracket manufacturers.

E. Replace fire protection cabinets that have been damaged or have deteriorated beyond successful repair by finish touchup or similar minor repair procedures.

END OF SECTION 104413

SECTION 104416 – FIRE EXTINGUISHERS

PART 1 - GENERAL

1.1 RELATED DOCUMENTS

A. Drawings and general provisions of the Contract, including General and Supplementary Conditions and Division 1 Specification Sections, apply to this Section.

1.2 SUMMARY

A. This Section includes the following:

1. Portable fire extinguishers and mounting brackets for fire extinguishers.

B. Related Sections include the following:

1. Division 10 Section "Fire Extinguisher Cabinets" for semi-recessed fire extinguisher cabinets.

1.3 SUBMITTALS

A. Product Data: For each type of product specified. Include rating and classification, material descriptions, dimensions of individual components and profiles, and finishes for fire extinguisher and mounting brackets.

B. Product Schedule: For fire extinguishers. Coordinate final fire-extinguisher schedule with fire-protection cabinet schedule to ensure proper fit and function. Use same designations indicated on Drawings.

C. Warranty: Sample of special warranty.

1.4 CLOSEOUT SUBMITTALS

A. Operation and Maintenance Data: For fire extinguishers to include in maintenance manuals.

1.5 WARRANTY

A. Special Warranty: Manufacturer's standard form in which manufacturer agrees to repair or replace fire extinguishers that fail in materials or workmanship within specified warranty period.

1. Failures include, but are not limited to, the following:

a. Failure of hydrostatic test according to NFPA 10.
b. Faulty operation of valves or release levers.

2. Warranty Period: Six years from date of Substantial Completion.

PART 2 - PRODUCTS

2.1 PERFORMANCE REQUIREMENTS

A. NFPA Compliance: Fabricate and label fire extinguishers to comply with NFPA 10, "Portable Fire Extinguishers."

B. Fire Extinguishers: Listed and labeled for type, rating, and classification by an independent testing agency acceptable to authorities having jurisdiction.

1. Provide fire extinguishers approved, listed, and labeled by FM Global.

2.2 PORTABLE FIRE EXTINGUISHERS

A. Fire Extinguishers:

1. Manufacturers: Subject to compliance with requirements, available manufacturers offering products that may be incorporated into the Work include, but are not limited to, the following:

a. JL Industries
b. Amerex Corporation
c. Badger Fire Protection.
d. Buckeye Fire Equipment
e. Kidde – A UTC Fire & Security Company

2. Valves: Manufacturer's standard.
3. Handles and Levers: Manufacturer's standard.
4. Instruction Labels: Include pictorial marking system complying with NFPA 10, Appendix B.

B. Multipurpose Dry-Chemical Type: **Type 1** UL-rated 2A–10B:C, 5 lb. nominal capacity, with a specially fluidized and siliconized mono ammonium phosphate-based dry chemical in manufacturer's standard enameled container.

1. All locations except as noted otherwise.

C. Wet Chemical Type: **Type 2** UL-rated 2A–1B:C:K, 6 liter nominal capacity, in a stainless steel container.

1. For use at locations in the Kitchen and services areas.

D. **Type 3** UL-rated 4A:40B:C, 30 lb.

1. For use in the Electrical/Mechanical Rooms.

2.3 MOUNTING BRACKETS

A. Mounting Brackets: Manufacturer's standard “J-type” galvanized steel hook, designed to secure fire extinguisher to wall or structure, of sizes required for types and capacities of fire extinguishers indicated, with plated or red black baked-enamel finish. Mobile-style clamp brackets are prohibited.

B. Identification: Lettering complying with authorities having jurisdiction for letter style, size, spacing, and location.

1. Identify bracket-mounted fire extinguishers with the words "FIRE EXTINGUISHER" in red letter decals applied to mounting surface.

PART 3 - EXECUTION

3.1 EXAMINATION

A. Examine fire extinguishers for proper charging and tagging.

1. Remove and replace damaged, defective, or undercharged fire extinguishers.

B. Proceed with installation only after unsatisfactory conditions have been corrected.

3.2 INSTALLATION

A. General: Install fire extinguishers and mounting brackets in locations indicated and in compliance with requirements of authorities having jurisdiction and the latest version of NFPA 10 and ADAAG.

B. Mounting Brackets: Fasten mounting brackets to surfaces, square and plumb, at locations indicated.

3.3 INSPECTION

A. New fire extinguisher units shall be inspected and/or serviced by a certified (NAFED) extinguisher contractor prior to installation. An inspection tag, displaying the current year, shall be attached to the unit before installation.

END OF SECTION 104416

SECTION 105113 - METAL LOCKERS

PART 1 - GENERAL

1.1 RELATED DOCUMENTS

A. Drawings and general provisions of the Contract, including General and Supplementary Conditions and Division 1 Specification Sections, apply to this Section.

1.2 SUMMARY

A. This Section includes the following:

1. Knocked-down wardrobe lockers.

B. Related Sections include the following:

1. Division 4 Section “Cast-in-Place Concrete” for concrete locker bases.

1.3 PREINSTALLATION MEETINGS

A. Pre-installation Conference: Conduct conference at Project site in accordance with Division 1 Section “Project Meetings”.

1.4 ACTION SUBMITTALS

A. Product Data: For each type of metal locker.

1. Include construction details, material descriptions, dimensions of individual components and profiles, and finishes for each type of metal locker.

B. Shop Drawings: For metal lockers.

1. Include plans, elevations, sections, details, and attachments to other work.
2. Show locker trim and accessories.
3. Include locker identification system.

a. Numbering will be determined by Architect during Shop Drawing review.

C. Samples for Initial Selection: Manufacturer's color charts showing the full range of colors available.

D. Product Schedule: For lockers. Use same designations indicated on Drawings.

1.5 INFORMATIONAL SUBMITTALS

A. Qualification Data: For Installer.

B. Sample Warranty: For special warranty.

1.6 CLOSEOUT SUBMITTALS

A. Maintenance Data: For adjusting, repairing, and replacing locker doors and latching mechanisms to include in maintenance manuals.

1.7 DELIVERY, STORAGE, AND HANDLING

A. Do not deliver metal lockers until spaces to receive them are clean, dry, and ready for their installation.

1.8 FIELD CONDITIONS

A. Field Measurements: Verify actual dimensions by field measurements before fabrication.

1.9 COORDINATION

A. Coordinate sizes and locations of concrete bases for metal lockers.

B. Coordinate sizes and locations of framing, blocking, furring, reinforcements, and other related units of work specified in other Sections to ensure that metal lockers can be supported and installed as indicated.

1.10 WARRANTY

A. Special Warranty: Manufacturer agrees to repair or replace components of metal lockers that fail in materials or workmanship, excluding finish, within specified warranty period.

1. Failures include, but are not limited to, the following:

    a. Structural failures.
    b. Faulty operation of latches and other door hardware.

2. Damage from deliberate destruction and vandalism is excluded.
3. Warranty Period for Knocked-Down Metal Lockers: Two years from date of Substantial Completion.

PART 2 - PRODUCTS

2.1 MANUFACTURERS

A. Source Limitations: Obtain metal lockers and accessories from single source from single locker manufacturer.

B. Basis-of-Design Manufacturer: Subject to compliance with requirements, available manufacturers offering products that may be incorporated into the Work include, but are not limited to, the following:

1. Republic Storage Systems, LLC.
2. Lyon Workspace Products, LLC.
3. Penco Products, Inc.

2.2 PERFORMANCE REQUIREMENTS

A. Accessibility Requirements: For lockers indicated to be accessible, comply with applicable provisions in the U.S. Architectural & Transportation Barriers Compliance Board's ADA-ABA Accessibility Guidelines and ICC A117.1.

2.3 KNOCKED-DOWN WARDROBE LOCKERS (Kitchen Locker Room/Utility Room)

A. Basis-of-Design Product: Republic Storage Systems, LLC “Standard Locker.”

B. Doors: One piece; fabricated from 16-gauge nominal-thickness steel sheet; formed into channel shape with double bend at vertical edges and with right-angle single bend at horizontal edges.

1. Doors less than 12 inches wide may be fabricated from 18-gauge nominal-thickness steel sheet.
2. Stiffeners: Manufacturer's standard full-height stiffener fabricated from 18-gauge nominal-thickness steel sheet; welded to inner face of doors.
3. Door Style: Manufacturer’s standard vented panel, using one of the following:

a. Louvered Vents: No fewer than six louver openings.
b. Perforated Vents: Manufacturer's standard shape and configuration.

C. Body: Assembled by riveting or bolting body components together. Fabricate from unperforated steel sheet with thicknesses as follows:

1. Tops, Bottoms, and Intermediate Dividers: 24-gauge nominal thickness, with single bend at sides.
2. Backs and Sides: 24-gauge nominal thickness, with full-height, double-flanged connections.
3. Shelves24-gauge nominal thickness, with double bend at front and single bend at sides and back.

D. Frames: Channel formed; fabricated from 24-gauge nominal-thickness steel sheet; lapped and factory welded at corners; with top and bottom main frames factory welded into vertical main frames. Form continuous, integral, full-height door strikes on vertical main frames.

E. Hinges: Welded to door and attached to door frame with no fewer than two factory-installed rivets per hinge that are completely concealed and tamper resistant when door is closed; fabricated to swing 180 degrees.

1. Knuckle Hinges: Steel, full loop, five or seven knuckles, tight pin; minimum 2 inches high. Provide no fewer than three hinges for each door more than 42 inches high.

F. Recessed Door Handle and Latch: Stainless-steel cup with integral door pull, recessed so locking device does not protrude beyond door face; pry and vandal resistant.

1. Multipoint Latching: Finger-lift latch control designed for use with padlocks; positive automatic latching and pre-locking.

a. Latch Hooks: Equip doors 48 inches and lower with two latch hooks; fabricated from 12-gauge nominal-thickness steel sheet; welded or riveted to full-height door strikes; with resilient silencer on each latch hook.
b. Latching Mechanism: Manufacturer's standard, rattle-free latching mechanism and moving components isolated to prevent metal-to-metal contact, and incorporating a pre-locking device that allows locker door to be locked while door is open and then closed without unlocking or damaging lock or latching mechanism.

G. Identification Plates: Manufacturer's standard, etched, embossed, or stamped aluminum plates, with numbers and letters at least 3/8 inch high.

H. Hooks: Manufacturer's standard ball-pointed type hooks, aluminum or steel; zinc plated.

I. Continuous Sloping Tops: Fabricated from 0.048-inch nominal-thickness steel sheet, with a pitch of approximately 20 degrees.

1. Closures: Vertical-end type.

J. Finished End Panels: Fabricated from 0.024-inch nominal-thickness steel sheet to cover unused penetrations and fasteners, except for perimeter fasteners, at exposed ends of non-recessed metal lockers; finished to match lockers.

K. Materials:

1. Cold-Rolled Steel Sheet: ASTM A 1008/A 1008M, Commercial Steel (CS), Type B, suitable for exposed applications.
2. Metallic-Coated Steel Sheet: ASTM A 653/A 653M, Commercial Steel (CS), Type B; with A60 zinc-iron, alloy (galvannealed) coating designation.

L. Finish: Baked enamel or powder coat.

1. Color: As selected by Architect from manufacturer's full range.

2.4 FABRICATION

A. Fabricate metal lockers square, rigid, without warp, and with metal faces flat and free of dents or distortion. Make exposed metal edges safe to touch and free of sharp edges and burrs.

1. Form body panels, doors, shelves, and accessories from one-piece steel sheet unless otherwise indicated.
2. Provide fasteners, filler plates, supports, clips, and closures as required for complete installation.

B. Fabricate each metal locker with an individual door and frame; individual top, bottom, and back; and common intermediate uprights separating compartments. Factory weld frame members of each metal locker together to form a rigid, one-piece assembly.

C. Equipment: Provide each locker with an identification plate and the following equipment:

1. Double-Tier Units: One double-prong ceiling hook, and two single-prong wall hooks.

D. Knocked-Down Construction: Fabricate metal lockers using nuts, bolts, screws, or rivets for nominal assembly at Project site or preassembly at plant prior to shipping.

E. Accessible Lockers: Fabricate as follows:

1. Locate bottom shelf no lower than 15 inches above the floor.
2. Where hooks, coat rods, or additional shelves are provided, locate no higher than 48 inches above the floor.

F. Boxed End Panels: Fabricated with 1-inch-wide edge dimension, and designed for concealing fasteners and holes at exposed ends of non-recessed metal lockers; finished to match lockers.

2.5 ACCESSORIES

A. Fasteners: Zinc- or nickel-plated steel, slotless-type, exposed bolt heads; with self-locking nuts or lock washers for nuts on moving parts.

B. Anchors: Material, type, and size required for secure anchorage to each substrate.

1. Provide nonferrous-metal or hot-dip galvanized anchors and inserts on inside face of all walls for corrosion resistance.

PART 3 - EXECUTION

3.1 EXAMINATION

A. Examine walls, floors, and support bases, with Installer present, for compliance with requirements for installation tolerances and other conditions affecting performance of the Work.

B. Proceed with installation only after unsatisfactory conditions have been corrected.

3.2 INSTALLATION

A. General: Install lockers level, plumb, and true; shim as required, using concealed shims.

1. Anchor locker runs at ends and at intervals recommended by manufacturer, but not more than 36 inches o.c. Using concealed fasteners, install anchors through backup reinforcing plates, channels, or blocking as required to prevent metal distortion.
2. Anchor single rows of metal lockers to walls near top and bottom of lockers; where installed on concrete bases, anchor to walls near top of lockers and to floor.

B. Knocked-Down Lockers: Assemble with standard fasteners, with no exposed fasteners on door faces or face frames.

C. Equipment:

1. Attach hooks with at least two fasteners.
2. Identification Plates: Identify metal lockers with identification indicated on Drawings.

a. Attach plates to each locker door, near top, centered, with at least two aluminum rivets.

D. Trim: Fit exposed connections of trim, fillers, and closures accurately together to form tight, hairline joints, with concealed fasteners and splice plates.

1. Attach filler panels with concealed fasteners. Locate filler panels where indicated on Drawings.
2. Attach boxed end panels using concealed fasteners to conceal exposed ends of non-recessed metal lockers.

3.3 ADJUSTING

A. Clean, lubricate, and adjust hardware. Adjust doors and latches to operate easily without binding.

3.4 PROTECTION

A. Protect metal lockers from damage, abuse, dust, dirt, stain, or paint. Do not permit use during construction.

B. Touch up marred finishes, or replace metal lockers that cannot be restored to factory-finished appearance. Use only materials and procedures recommended or furnished by locker manufacturer.

END OF SECTION 105113

SECTION 107500 – FLAGPOLES

PART 1 - GENERAL

1.1 RELATED DOCUMENTS

A. Drawings and general provisions of the Contract, including General and Supplementary Conditions and Division 1 Specification Sections, apply to this Section.

1.2 SUMMARY

A. This Section includes ground-set aluminum flagpoles.

B. Owner-Furnished Material: Flags.

C. Related Section: Division 3 Section “Cast in Place Concrete” for concrete foundations for flagpoles.

1.3 PERFORMANCE REQUIREMENTS

A. Structural Performance: Provide flagpoles capable of withstanding the effects of wind loads as determined according to the building code in effect for this Project or NAAMM FP 1001, "Guide Specifications for Design Loads of Metal Flagpoles," whichever is more stringent.

1. Base flagpole design on maximum standard-size flag suitable for use with pole or flag size indicated, whichever is more stringent.
2. Basic Wind Speed: For Project location, 90 mph.

1.4 ACTION SUBMITTALS

A. Product Data: For each type of product indicated. Include construction details, material descriptions, dimensions of individual components and profiles, operating characteristics, fittings, accessories, and finishes for flagpoles.

B. Shop Drawings: For flagpoles. Include plans, elevations, details, and attachments to other work. Show general arrangement, jointing, fittings, accessories, grounding, anchoring, and support. Include section, and details of foundation system for ground-mounted flagpoles.

C. Samples for Verification: For each type of exposed finish required, in manufacturer's standard sizes.

D. Delegated-Design Submittal: For flagpole assemblies indicated to comply with performance requirements and design criteria, including analysis data signed and sealed by the qualified professional engineer responsible for their preparation. Include loads, point reactions, and locations for attachment of flagpoles to building's structure.

1.5 INFORMATIONAL SUBMITTALS

A. Qualification Data: For qualified professional engineer.

1.6 CLOSEOUT SUBMITTALS

A. Operation and Maintenance Data: For flagpoles to include in operation and maintenance manuals.

1.7 QUALITY ASSURANCE

A. Source Limitations: Obtain each type of flagpole as complete unit, including fittings, accessories, bases, and anchorage devices, from single source from single manufacturer.

1.8 DELIVERY, STORAGE, AND HANDLING

A. General: Spiral-wrap flagpoles with heavy kraft paper or other weathertight wrapping and enclose in a hard fiber tube or other protective container.

PART 2 - PRODUCTS

2.1 MANUFACTURERS

A. Available Manufacturers: Subject to compliance with requirements, manufacturers offering products that may be incorporated into the Work include, but are not limited to, the following:

1. American Flagpole; a Kearney-National Inc. company.
2. Concord Industries, Inc.
3. Ewing Flagpoles.
4. Pole-Tech Company, Inc.
5. U.S. Flag & Flagpole Supply, LP.

2.2 FLAGPOLES

A. Flagpole Construction, General: Construct flagpoles in one piece. If more than one piece is necessary, comply with the following:

1. Fabricate shop and field joints without using fasteners, screw collars, or lead caulking.
2. Provide flush hairline joints using self-aligning, snug-fitting, internal sleeves.
3. Provide self-aligning, snug-fitting joints.

B. Exposed Height: 40 feet.

C. Aluminum Flagpoles: Provide cone-tapered flagpoles fabricated from seamless extruded tubing complying with ASTM B 241, Alloy 6063, with a minimum wall thickness of 3/16 inch.

D. Metal Foundation Tube: Manufacturer's standard corrugated-steel foundation tube, not less than 0.064-inch-nominal wall thickness. Provide with 3/16-inch steel bottom plate and

support plate; 3/4-inch-diameter, steel ground spike; and steel centering wedges welded together. Galvanize steel after assembly. Provide loose hardwood wedges at top of foundation tube for plumbing pole. Provide flashing collar of same material and finish as flagpole.

2.3 FITTINGS

A. Finial Ball: Manufacturer's standard flush-seam ball, sized as indicated or, if not indicated, to match pole-butt diameter.

1. 0.063-inch spun aluminum with clear anodized finish.

B. Internal Halyard, Winch System: Manually operated winch with control stop device and removable handle, stainless-steel cable halyard, and concealed revolving truck assembly with plastic-coated counterweight and sling. Provide flush access door secured with cylinder lock. Finish truck assembly to match flagpole.

1. Halyard Flag Snaps: Provide two stainless-steel halyard swivel flag snap hooks per halyard; provide with neoprene or vinyl covers.

2.4 MISCELLANEOUS MATERIALS

A. Concrete: Provide concrete composed of Portland cement, coarse and fine aggregate, and water mixed in proportions to attain a 28-day compressive strength of not less than 3,000 psi, complying with ASTM C 94. Refer to Division 3 Section “Cast-in-Place Concrete.”

B. Nonshrink, Nonmetallic Grout: Factory-packaged, nonstaining, noncorrosive, nongaseous grout complying with ASTM C 1107.

C. Sand: ASTM C 33, fine aggregate.

D. Elastomeric Sealant: Multicomponent nonsag urethane joint sealant complying with requirements in Division 7 Section "Joint Sealants" for Use NT (non-traffic) and for Use M, G, A, and, as applicable to joint substrates indicated, for Use O.

2.5 FINISHES

A. Comply with NAAMM's "Metal Finishes Manual for Architectural and Metal Products" for recommendations relative to applying and designating finishes.

B. Aluminum: Finish designations prefixed by AA conform to the system established by the Aluminum Association for designating aluminum finishes.

1. Natural Satin Finish: Provide fine, directional, medium satin polish (AA-M32); buff complying with AA-M20; and seal aluminum surfaces with clear, hard-coat wax.

PART 3 - EXECUTION

3.1 EXAMINATION

A. Examine substrates, areas, and conditions, with Installer present, for compliance with requirements for installation tolerances, including foundation; accurate placement, pattern, anchor bolt orientation, and other conditions affecting performance.

B. Proceed with installation only after unsatisfactory conditions have been corrected.

3.2 PREPARATION

A. Prepare in-ground flagpoles by painting below-grade portions with a heavy coat of bituminous paint.

B. Excavation: For foundation, excavate to neat clean lines in undisturbed soil. Remove loose soil and foreign matter from excavation and moisten earth before placing concrete.

C. Provide forms where required due to unstable soil conditions and for perimeter of flagpole base at grade. Secure forms, foundation tube, fiberglass sleeve, or anchor bolts in position, braced to prevent displacement during concreting.

D. Place concrete immediately after mixing. Compact concrete in place by using vibrators. Moist-cure exposed concrete for not less than 7 days or use a nonstaining curing compound.

E. Trowel exposed concrete surfaces to a smooth, dense finish, free of trowel marks, and uniform in texture and appearance. Provide positive slope for water runoff to base perimeter.

3.3 FLAGPOLE INSTALLATION

A. General: Install flagpoles where shown and according to Shop Drawings and manufacturer's written instructions.

B. Ground Set: Place foundation tube, center, and brace to prevent displacement during concreting. Place concrete. Plumb and level foundation tube and allow concrete to cure. Install flagpole, plumb, in foundation tube.

1. Foundation Tube: Place tube seated on bottom plate between steel centering wedges and install hardwood wedges to secure flagpole in place. Place and compact sand in foundation tube and remove hardwood wedges. Seal top of foundation tube with a 2-inch layer of elastomeric joint sealant and cover with flashing collar.

END OF SECTION 107500

SECTION 114000 – FOOD SERVICE EQUIPMENT

PART 1 – GENERAL

1.1 SECTION INCLUDES

A. This section includes food service equipment, as indicated on food service "FS" series of drawings and was prepared by Food Facilities Concepts, Inc. of Carnegie, Pennsylvania.

1.2 RELATED DOCUMENTS

A. Drawings and other general provisions of Contract, including General and Supplementary Conditions and Division -1 Sections, apply to this Section.

B. Division 22 Sections: Required drain traps, steam traps, atmospheric vents, valves, pipes and pipe fittings, duct work, and other materials necessary to complete mechanical hook up of food service equipment.

C. Division 26 Sections: Wiring, disconnects, and other materials necessary to complete electrical hook up of food service equipment.

D. Division 23 Sections: Ductwork, fans, drives and other materials necessary to complete the mechanical venting hook up of food service equipment.

E. Food service equipment cutbook provided as a supplement to the 11 40 00 specifications.

F. Refer to the scope of work matrix shown on the food service equipment drawings and this specification sections for scope of work related to the food service equipment, permitting, and general utility requirements. All drawings, specifications, product data, and documents as required for permitting is the responsibility of the food service equipment contractor to provide. All of these documents used for permitting are to be the submittal and shop drawings required for this scope of work and are to be the documents that are reviewed and stamped "Approved" or "Approved as Noted".

1.3 SUBMITTALS

A. Food Service Equipment Contractor shall coordinate submittal due dates with the Construction Schedule for this Project. The food service consultants review may take up to 15 business days. It is the contractor's responsibility to provide the submittals in accordance with the project's schedule and the food service consultants review timeframe note above.

B. Submit product data and installation instructions for each item; include rough-in dimensions, service connection requirements, performances, materials, manufacturers' model numbers,

furnished accessories, power/fuel requirements, water/drainage requirements, and other similar information.

C. Submit shop drawings including dimensioned rough-in drawings showing mechanical and electrical requirements. Submit dimensioned refrigeration system, walk-in cooler/freezer, hood, hood fire suppression, fabrication drawings for custom fabricated equipment including plans, elevations, and sections, showing materials and gauges used and any other shop drawings requested in the itemized specification section.

D. All shop drawings to be produced in electronic CAD or BIM software and submitted in PDF format. All drawings must be submitted in black and white. Shop drawings containing line color other than black will be rejected. Shop drawings to be submitted as one complete package. Shop drawings will be held and not reviewed until the entire package is received. Drawings to be submitted as one complete package using individual submittal numbers for each set of drawings. Electronic files with information beyond wall and equipment layout will not be made available to the contractor(s) under any circumstance. Schedules, rough-in layouts, general details, fabrication drawings will not be made available.

E. Submit maintenance data and parts list for each item of food service equipment. Include these data, product data, shop drawings, and wiring diagrams in maintenance manuals. Two copies of the manual are to be provided.

1.4 QUALITY ASSURANCE

A. Manufacturers' Qualifications: Firms regularly engaged in manufacturer of food service equipment of types, capacities and sizes required, whose products have been in satisfactory use, in similar service, for not less than five projects.

B. Installer's Qualifications: Engage an experienced installer who has completed food service similar in material, design, and extent to that indicated, for a project that has resulted in construction, with a record of successful in-service performance.

C. Codes and Standards:

1. NSF Standards: Comply with applicable National Sanitation Foundation (NSF) standards and recommended criteria. Provide each principal item of food service equipment with a NSF "seal of approval".
2. UL Labels: Where available, provide UL labels on prime electrical components of food service equipment. Provide UL "recognized marking" on other items with electrical components, signifying listing by UL, where available.
3. ANSI Standards: Comply with applicable ANSI standards for electric powered and gas burning appliances, for piping to compressed gas cylinders, and for plumbing fittings, including vacuum breakers and air gaps, to prevent siphonage in water piping.
4. NFPA Codes: Install food service equipment in accordance with the latest version of the following National Fire Protection Association (NFPA) codes:
   a. NFPA 54 - National fuel gas code.

b. NFPA 70 - National electrical code
c. NFPA 96 - Removal of smoke and grease-laden vapors from commercial cooking equipment.

5. ASME Boiler Code: Construct steam-generating and closed steam heating equipment to comply with American Society of Mechanical Engineers (ASME) boiler and pressure vessel code; Section IV for units not exceeding 15 PSI or 250° F (121° C), or Section I for higher pressure/temperature units.

1.5 DELIVERY, STORAGE AND HANDLING

A. Deliver food service equipment in containers designed to protect equipment and finish until final installation. Make arrangements to receive equipment and hold in warehouse until delivery can be made to job site.

B. Store food service equipment in original containers and in location to provide adequate protection to equipment while not interfering with other construction operations.

C. Handle food service equipment to avoid damage to components, enclosures and finish. Do not install damaged food service equipment; replace and return damaged components to equipment manufacturer.

1.6 PROJECT CONDITIONS

A. Take field measurements to assure accurate fit of fabricated equipment.

B. Check electrical characteristics and water, steam and gas pressure. Provide pressure regulating valves where required for proper operation of equipment.

C. Electrical Requirements: Provide motors and heating elements with the following electrical characteristics, if not otherwise indicated:

1. Motors 1/2 HP and smaller: 120/1/60.
2. Motors 3/4 HP and larger: 208/3/60.
3. Heating elements 1500 watts and smaller: 120/1/60.
4. Heating elements over 1500 watts: 208/3/60.

1.7 REFRIGERATION WARRANTY

A. Special Project Warranty: Provide written warranty, signed by manufacturer, agreeing to replace/repair, within warranty period, refrigeration compressors with inadequate and defective materials and workmanship, including leakage, breakage, improper assembly, or failure to perform as required, provided manufacturer's instructions for handling, installing, protecting and maintaining units have been adhered to during warranty period. This warranty shall be in addition to, and not a limitation of, the rights the Owner may have against the contractor under the Contract Documents.

1. Warranty Period: 5 years from date of substantial completion.

B. All equipment items containing refrigerated components are to include a minimum one-year parts and labor, five-year compressor warranty.

PART 2 – PRODUCTS

2.1 FOOD SERVICE EQUIPMENT SCHEDULE

A. Refer to “Part 4 - Itemized Specifications” at the end of this section and the equipment schedules listed on the food service drawings for the food service equipment required for this project. Refer to the food service drawings for location of the items. Where discrepancies exist in quantity or size between drawings and specifications, the larger quantity/size must be considered as the correct information

2.2 MATERIALS

A. Stainless Steel: ANSI Type 304. Provide non-magnetic sheets, free of buckles, waves and surface imperfections. Provide No. 4 polished finish for exposed surfaces.

1. Provide protective covering on polished surfaces of stainless steel sheet work, and retain/maintain until time of final testing, cleaning, start up and substantial completion.

B. Galvanized Sheet Steel: ASTM A 526, except ASTM A 527 for extensive forming; ASTM A 525, G90 zinc coating, chemical treatment.

C. Sheet Steel: ASTM A 569 hot rolled carbon steel.

D. Stainless Steel Tube: ASTM A 554, type 304 with No. 4 polished finish.

E. Aluminum: ASTM B 209 sheet and plate, ASTM B 221 extrusions, 0.40 mill clear anodized finish where exposed, unless otherwise indicated.

F. White Metal: Corrosion resistant metal containing not less than 21 percent nickel. Make castings free from pit marks, runs, checks, burrs and other imperfections; rough grind, polish and buff to bright luster.

1. In lieu of white metal castings, 18-8 stainless steel die cast or stamped may be used.

G. Plastic Laminate: NEMA LD3, general purpose high pressure type, 0.05 inch thick except 0.042 inch thick for flat work and post forming, smooth texture, and color white unless otherwise indicated.

H. Plastic Materials and Components: Except for plastic laminate, provide plastic materials and components that comply with NSF 51.

I. Hardwood Work Surfaces: Laminated edge-grained hard maple (acer Saccharum), NHLA first grade with knots, holes and other blemishes culled out, kiln dried at 8 percent or less moisture, waterproof glue, machined, sanded and finished with NSF approved oil sealer.

J. Sound Deadening: Heavy bodied resinous coating, filled with granulated cork or other resilient material, compounded for permanent, non-flaking adhesion to metal in 1/8 inch thick coating.

1. Apply coating of sound deadening material to underside of tops, drainboards, dishtables and sinks.

K. Sealants: ASTM C 920; Type S, Grade NS, Class 25, Use NT. Provide sealant, that when fully cured and washed, meets requirements of Food and Drug Administration regulation 21 CFR 177.2600 for use in areas where it comes in contact with food.

1. Color: As selected by architect with manufacturer's standard colors.
2. Backer rod: Closed-cell polyethylene rod stock, larger than joint width.

L. Gaskets: Solid or hollow (not cellular) neoprene or PVC; light gray, minimum 40 shore A hardness, self-adhesive or prepared for either adhesive application or mechanical anchorage.

M. Solid Surface Material: Solid surface material to be ½” thick or as noted on drawings. Material to be installed in accordance with manufacturer’s recommendations. Color sections and finishes to be as noted on the drawings.

2.3 FABRICATED PRODUCTS

A. Refrigerator Hardware: Heavy duty, die cast zinc, chrome plated and polished.

1. Hinges: Edge mounted, self-closing type.
2. Latches: Edge mounted, arranged for locking devices.

B. Handles and Pulls: Provide stainless steel handles with No. 4 finish, or die cast zinc with polished chrome-plated finish. Provide die stamped stainless steel pulls, recessed rectangular type, with beveled edge frame.

C. Door Slides: Provide stainless steel or galvanized steel door slides with minimum load capacity of 100 pounds per pair, and with positive door stop. Provide ball bearing rollers.

D. Hinges: Provide stainless steel hinges, continuous type or butt type as indicated.

E. Sliding Door Hardware: Provide extruded aluminum door track. Provide galvanized steel door sheave with nylon surface and ball bearing inner races. Provide stainless steel bottom guide pins, spring loaded.

F. Adjustable Shelf Supports: Provide stainless steel shelf supports, snap in type, and stainless steel brackets with countersunk mounting holes.

G. Catches: For hinged doors, provide permanent magnetic catch of sufficient strength to hold door shut.

H. Locks: Manufacturers standard brass 5-pin cabinet type lock. Provide two keys for each lock, keyed separately.

I. Lever Drains: Provide 2-inch, heavy cast bronze body, removable flat stainless steel strainer, twist handle waste outlet, and one piece connected chrome plated brass overflow.

J. Casters: Provide minimum 4-inch diameter wheel casters with 1 1/8 inch tread width, complying with NSF standards. Provide sealed, self-lubricating bearings, cadmium plated or bright zinc plated steel disc wheels, and solid synthetic rubber tires. Provide foot brakes on 2 casters per unit.

2.4 FABRICATION OF EQUIPMENT

A. The following is a list of approved custom fabricators:

1. Keystone Custom Fabricators - Elizabeth, PA (412) 384-9131
2. Bova Corporation – Valencia, PA (724) 898-0288
3. Commercial Stainless – Bloomsburg, PA (570) 387-8980
4. BrassSmith – Denver, CO (303) 331-8777

The Architect and Food Service Consultant reserves the right to accept or reject any non-listed custom fabrication manufacturer. Any deviation from the approved list of fabricators will require written authorization from the Food Service Consultant prior to submitting a bid using pricing from a non-listed fabricator. All references to provided must be members of Foodservice Consultants Society International.

B. Tops: Fabricate of 14 gauge stainless steel, with exposed edges rolled on 1 1/2 inch diameter radius, and with corners bullnosed. Where tops are adjacent to walls or adjoining equipment, turn up ten inches and back two inches on a 45-degree angle, unless otherwise indicated.

1. Backsplashes: Cove horizontal and vertical corners.

C. Dishtables and Drainboards: Fabricate of 14 gauge stainless steel, with exposed edges formed into 1 1/2 inch by 180 degrees rolled rim, approximately 3 inches high. Provide built in pitch of 1/2-inch minimum. Provide ten inch high backsplashes with 2 inch return on 45 degree angle or 1 1/2 inch diameter rolled rim, as indicated. Construct front rim and backsplash on drainboards with continuous level plane with sink it adjoins. Support drainboards up to 36 inches in length, by 1-inch diameter stainless steel tube welded to underside of drainboard and leg gusset. Support drainboards 36 inches and longer with legs. Cove horizontal and vertical corners with not less than 3/4-inch radius.

D. Framing: Mount tops on 4 inch wide by 14 gauge stainless steel channels.

1. Run framework around entire perimeter of unit, and cross brace on centers. For dishtables and drainboards, run framing from front to back at each leg location, and run additional channel lengthwise, located at center of table width and welded to leg channels. Fasten framing to underside of top surfaces with 1/4-inch studs welded at approximately 12-inch centers. Provide each stud with suitable chrome plated lockwashers and capnuts, and make stud lengths such that capnuts can be made up tight bringing top down snugly to framing.

E. Legs and Cross Rails: Construct legs of 1 5/8 inch OD by 16 gauge stainless steel tubing, with fully enclosed stainless steel bullet shaped adjustable foot with minimum adjustment of 1 inch up or down without any threads showing. Fasten legs to 4-inch high stainless steel gusset with top completely sealed by means of stainless steel plate. Weld gusset continuously to bottom of unit framing. Construct cross rails of 1 1/4 inch O.D. by 16-gauge stainless steel tubing. Weld cross rails continuously to legs, grind and polish until smooth.

F. Drawers: Lift out type drawer body, one piece 20 inch by 20 inch by 5 inch die stamped of 18 gauge stainless steel, with inside radiused corners. Construct front of double pan stainless steel, 16-gauge exterior and 20-gauge interior. Provide lock for each drawer.

1. Fasten drawer suspension guides to 16-gauge stainless steel housing suspended from angle framing under fixed top.

G. Cabinet Bodies: Construct of 18 gauge stainless steel, with end panels formed with round corners for freestanding units, and square corners for fixtures that adjoin walls or other fixtures. Provide 90-degree retentions on end panels at front and rear, turned in toward body of cabinet and welded for reinforcement. For cabinets with open shelving, provide double wall inner panels. Weld ends to horizontal angle or channel members to form integral cabinet base. Provide backs of same material as ends, with vertical edges turned in to match edges of ends. Weld making flush joint.

H. Inserts: Where cold pans and other inserts are to be installed in cabinet bases, provide apron full depth of insert and of same material as bodies with reinforced openings as required. Form in openings on all sides.

I. Sliding Doors: Construct of 18 gauge stainless steel, with edges formed into channel extending around all sides, forming doors 7/8 inch thick. Insert sound deadening material, and enclose with stainless steel back panel with welded corner joints.

1. Mount doors on sliding door hardware.
2. Construct doors so as to be removable for cleaning purposes, and provide with stops. Provide, on each door, recessed stainless steel pulls and locks.

J. Hinged Doors: Construct same as sliding doors. Mount on stainless steel continuous type hinges, fitted with stainless steel pulls, magnetic catches and locks. Construct so that door face is flush with cabinet body.

K. Shelves: Construct of 14-gauge stainless steel.

1. Bottom shelves: Extend forward and turn down at front so as to be flush with front facing of cabinet.
2. Fixed intermediate shelves: Weld to front stiles and to 14 gauge stainless steel brackets so that shelf is 1 inch away from back and ends of cabinet.
3. Adjustable shelves: Channel on all four sides, weld corners, and mount on removable stainless steel standards.

L. Open Base Shelving: Construct of 16 gauge stainless steel with edges rolled down on open sides, and 2 inch turn up with 3/4 inch radius on rear and ends where adjacent to walls and other equipment. Neatly notch corners and weld to legs. Reinforce shelving longitudinally with 14 gauge formed channel welded to underside. Construct removable shelves as above, but fit over cross rails. Do not exceed shelving sections of 30 inches long; where one section abuts another, turn down edges one inch.

M. Wall Shelves: Construct of 16 gauge stainless steel with 1 1/2 inch roll on front and exposed ends, and with 2 inch turn up on back and ends where adjacent to walls or other fixtures. Weld all corners. Construct wall brackets of 14-gauge stainless steel with 1 1/2-inch flange at wall and completely welded to underside of shelf. Fasten each bracket to wall with minimum of two 1/2- inch bolts anchored to wall. Fasten shelf to wall bracket by means of studs welded to shelf, and secure with lockwasher and chrome plated cap nuts. Install so that shelf sets 1 1/2 inch away from the wall.

N. Overshelves: Set shelves mounted over equipment, not adjacent to walls, on 1 inch by 14 gauge stainless steel tubular standards fitted with stainless steel base flanges. Completely weld top of tubular standards to 14 gauge stainless support channels, run channels full width of overshelf. Run 1/2-inch steel tension rods through counter tops and reinforcing angle framing, secure with nuts and lockwashers to assure stable sway-free structure.

1. Where shelves are mounted over drainboards or dish tables, mount on upturned, rolled edges, omitting flanges, and scribe lower end of tube to match contour of roll.

O. Sinks: Fabricate from 14 gauge stainless steel with interior corners rounded to 1 inch radius, both horizontally and vertically, forming cove in bottom. Construct with butt-edge joints, welded and ground smooth so no evidence of welding will appear. Divide multiple compartment sinks with double wall 14 gauge stainless steel partitions rounded to 1/2 inch radius on top and having corners rounded same as other corners in sinks, continuously welded in place with welds ground smooth and polished. Provide back, bottom and front of one continuous piece with no overlapping joints or open spaces between compartments. Pitch bottom of each compartment and crease to die stamped recess to receive lever type drain, without use of solder, rivets or welding.

1. Finish front and exposed ends of sink with 1 1/2 inch 180 degree rolled edge. Finish back and ends adjacent to walls or other fixtures with splash back. Punch back splash back to receive wall mounted faucets.
2. For sinks in worktops, construct as above, but omit roll edges with splash backs. Fabricate bowl so as to be flush with work surfaces.

P. Cold Pans: Fabricate with 14-gauge stainless steel lining and 20 gauge stainless steel casing. Cove interior horizontal and vertical corners. Insulate sides, ends and bottom with material thermally equal to 2-inch thickness of fiberglass. Sweat 1/2-inch diameter copper cooling coils to underside of cold pan, and seal in thermostatic material. Turn down countertop 1 inch into pan. Install completely concealed 1-inch wide plastic breaker strip. Install 1-inch chrome plated drain with plug. Provide 1/2 inch high false bottom of 14 gauge perforated stainless steel in removable sections.

2.5 EXHAUST HOOD FABRICATION

A. Comply with NFPA 96, including appendix A.

B. Grease Removal: Provide grease removal devices as called for in the itemized specifications.

C. Light Fixtures: Provide light fixtures as called for in the itemized specifications.

2.6 REFRIGERATION EQUIPMENT

A. Provide refrigeration condensing units of size and capacities as indicated, consisting of compressors, condensers, receivers, motors, mounting bases, vibration isolators, refrigeration components, safety devices, electrical controls, refrigerant and protective controls, all factory assembled and tested.

1. Refrigerant: Charge units with refrigerant. Provide direct connect type piping connections to receive piping from evaporator coils.
2. Outdoor mounting: Provide weather tight housing and low ambient controls for units mounted outdoors.

B. Refrigerant Piping: Type ACR copper tubing, hard temper, with wrought fittings and silver solder joints. Insulate suction lines with 1/2-inch pre-molded foamed plastic insulation.

C. Electrical Wiring: Electrical Contractor to provide required wiring between electrical rough in and refrigeration units for proper operation.

D. Plumbing Piping: Provide required water and drain piping between plumbing rough in and refrigeration units for proper operation.

E. Refrigeration Specialties: Provide as indicated refrigerant dryer, liquid line solenoid valve, suction line filter, expansion valve and water regulating valve (for water cooled condensers only). Provide pump down control circuit consisting of thermostat and solenoid valve. Maintain box temperature from thermostat and liquid line solenoid valve; control compressor from suction pressure.

2.7 SUBSTITUTIONS

A - In cases where multiple manufacturers have been listed in the itemized specifications, the model number and description indicated are for the first named manufacturer. Equivalent products produced by the other listed manufacturers will be acceptable for use on the project.

All “like products” must be provided by one manufacturer. As an example, all reach-in and roll-in refrigerators and freezers must be manufactured by the same company. The food
service consultant shall have authority and final say regarding the equivalency of the proposed 2nd and 3rd listed manufacturer's products, and what items are to be considered “like products”.

B - Refer to Division 1 specification section “Substitution Process” for additional guidelines and requirements.

C - Payment for all additional design, engineering and construction costs incurred, as a result of any substituted item, will be the responsibility of the food service equipment contractor. No additional compensation will be provided to cover these costs from the food service consultant. Purchasing and use of pre-owned equipment will be considered a substitution. Review of this equipment and any changes to layout and design as a result of substituted equipment will be invoiced on an hourly basis as additional services established in the architect/food service consultant design agreement.

E - Substitutions for any systems that have been custom engineered will need to be reengineered by the proposed substituted manufacturer based on their guidelines and listings. The engineering drawings and specifications will need to be forwarded to the food service consultant for evaluation.

F - Substituted products must be accepted by the owner/client taking into consideration the evaluation of the substituted products by the food service consultant.

PART 3 – EXECUTION

3.1 INSPECTION

A. Rough In Work: Examine roughed in mechanical and electrical services, installation of floors, walls, columns and ceilings, and other conditions under which food service work is to be installed; verify dimensions of services and substrates before fabricating work. Notify contractor of unsatisfactory locations and dimensions of other work and of unsatisfactory conditions for proper installation of food service equipment. Do not proceed with fabrication and installation until unsatisfactory dimensions and conditions have been corrected in a manner satisfactory to installer.

3.2 INSTALLATION

A. Install all equipment, including existing reused items, per manufacturer’s recommendations.
B. Set each item of non-mobile and non-portable equipment securely in place, level and adjust to correct height. Anchor to supporting substrate where indicated and where required for sustained operation and use without shifting or dislocating. Conceal anchorages where possible. Adjust countertops and other work surfaces to level tolerance of 1/16-inch maximum offset, and maximum variation from level or indicated slope of 1/16 inch per foot.

1. Where indicated or required for safety of equipment operator, anchor equipment

to floor or wall. Where equipment is indicated to be anchored to floor, provide legs with adjustable flanged foot. Install 2 anchors on each foot.

C. Field Joints: Complete field assembly joints in work (joints cannot be completed in shop) by welding, bolting and gasketing, or similar methods as indicated. Grind welds smooth and restore finish. Set or trim gaskets flush, except for "T" gaskets as indicated.

D. Enclosed Spaces: Treat spaces that are inaccessible, after equipment installation, by covering horizontal surfaces with powdered borax at the rate of 4 ounces per square foot.

E. Closure Plates and Strips: Install where required with joints coordinated with units of equipment.

F. Cutouts: Provide cutouts in food service equipment where required to run plumbing, electric, gas or steam lines through equipment items for final connection.

G. Sealants and Gaskets: Install all around each unit to make joints airtight, water tight, vermin proof and sanitary for cleaning purposes. In general, make sealed joints not less than 1/8 inch wide, and stuff backer rod to shape sealant bead properly at 1/4-inch depth. Shape exposed surfaces of sealant slightly concave with edges flush with faces of materials at joint. At internal corner joints, apply sealant or gaskets to form a sanitary cove of not less than 3/8-inch radius. Provide sealant filled or gasketed joints up to 3/4-inch joint width; metal closure strips for wider joints, with sealant application each side of strips. Anchor gaskets mechanically or with adhesives to prevent displacement.

3.3 RELOCATION OF EXISTING FOOD SERVICE EQUIPMENT

A. It is the responsibility of the food service contractor to relocate all existing to be reused items. The food service contractor must mark all items requiring disconnection from utilities. Electrical, Plumbing, and HVAC contractors will disconnect food service equipment from the utilities. The food service contractor shall then remove equipment off-site that is to be reused and protect until time of installation. The food service contractor is to then relocate these reused items to their final position and make ready for connection by the various trades.

B. Refer to architectural drawings and specifications for scope associated with existing equipment within the kitchen space that is considered existing/remain or existing and to be disposed of.

C. A full site survey of all existing conditions and equipment must be scheduled and completed prior to submitting a final bid for the scope defined in this specification section

3.4 FIELD QUALITY CONTROL

A. Testing: Coordinate start up of food service equipment when service lines have been tested, balanced and adjusted for pressure, voltage and similar considerations. Do not operate steam lines until they have been cleaned and treated for sanitation. Before testing, lubricate each equipment item in accordance with manufacturers' recommendations.

1. Test each item of operational equipment to demonstrate that it is operating properly and that controls and safety devices are functioning. Repair or replace equipment found to be defective in its operation, including units that are below capacity or operating with excessive noise or vibration.

3.5 CLEANING

A. After completion of installation and other major work in food service areas, remove protective coverings, if any, and clean food service equipment, internally and externally. Restore exposed and semi-exposed finishes to remove abrasions and other damages; polish exposed metal surfaces and touch up painted surfaces. Replace work that cannot be successfully restored.

1. Prior to date of substantial completion on food service equipment work, buff exposed stainless steel finishes lightly, using power buffer and polishing rouge or grit of No. 400 or finer.

B. Final Cleaning: After testing and start up, but before time of substantial completion, clean and sanitize food service equipment and leave in condition ready for food service.

3.6 CLOSEOUT PROCEDURES

A. Provide services of installer's technical representative and manufacturers technical representative where required, to instruct Owner's personnel in operation and maintenance of food service equipment.

1. Schedule training with Owner; provide at least 7 day notice to contractor and architect of training date.

2. In addition to Division 00 and 01 requirements, include a minimum of thirty minutes per piece of equipment on site in one visit for this training, but not less than minimum required to sufficiently train Owner’s personnel.

3.7 FOOD SERVICE EQUIPMENT SCHEDULE

A. The following pages comprise the list of itemized food service equipment specifications for this project. Refer to the drawings for location of the items. In any case(s) where discrepancies exist in quantity between drawings and itemized specifications, the larger quantity should be used.

PART 4 - ITEMIZED SPECIFICATIONS

ITEM 1. TWO COMPARTMENT WALK-IN COOLER/FREEZER by TAFCO or AMERICAN PANEL

This two compartment walk-in cooler/freezer is to be the size and shape as shown on the foodservice equipment plan (FS100). Manufacturers' standard (actual) sizes and door locations are not acceptable unless they conform to the equipment plan. The height is to be 8'-6". It is to be constructed as one common unit. It is to be constructed in a 4" deep depressed building slab with the walk-in floor acting as the finished floor material. Depth of slab depression is from top of finished floor in the kitchen, food service equipment contractor to coordinate proper size and depth and accept size, depth, and levelness of the slab depression prior to installing the walk-in.

A - Constructed of modular panels
B - Construction to be in strict compliance with NSF standard number 7 and in accordance to section 312 of the US Energy Bill H.R.6
C - Panels are to consist of interior and exterior metal surfaces precision roll formed to exact dimensions with double 90° edges. The finished metal surfaces are to be fitted with a tear drop profile gasket and placed in precision tooled fixtures where they are to be injected with foamed-in place urethane insulation.
D - Curing of the insulating core is to take place at a controlled temperature to provide permanent adhesion to the metal surfaces, to allow uniform foam expansion and to maximize finished panel strength
E - Panel edges to have molded urethane tongue and groove profile to accurately align panels during installation and to provide an air tight seal
F - All light fixtures to be vapor proof LED fixtures with bulbs included
G - Panels to be 4" thick
H - Floor panels to have an NSF approved cove between the floor and walls
I- Floor panels are to be plywood reinforced constructed as "super floor" and are to be capable of supporting evenly distributed loads of 5,000 lbs. per square foot
J - Doors are to be flush mount, magnetic infitting type with door opening of 36" wide x 78" high.
K - Perimeter of the doors and frames shall be built of fiberglass reinforced plastic (FRP) and shall house a door frame heater circuit, flexible bellows type vinyl door gasket with magnetic core, a magnet attracting stainless steel trim strip and flexible vinyl door sweep
L - Door frames to be provided with a vapor proof light fixture centered above the door with globe pre-wired to a rocker type light switch with pilot light, digital thermometer, variable slide rheostat for heater wire control and a 14 gauge galvanized steel threshold plate
M - Door hardware to be die cast zinc with brushed satin finish
N - Doors to be mounted with three (3) heavy-duty cam lift hinges per door
O - Door pull handles to incorporate a keyed cylinder lock, provision for a separate padlock and Kason # 0485 1/4 turn inside safety release handle to prevent personnel entrapment
P - Doors to include a hydraulic closer device for positive door closing
Q - Each door equipped with Kason Thermal Flex two piece vinyl doors
R - Cooler doors to have insulation of at least R-32 and freezer doors to have insulation of at least R-32
S - Finishes are to be as follows:

1- Unexposed exterior walls to be .032" mill finished stucco embossed aluminum
2- Exposed exterior walls to be 22 gauge stucco embossed stainless steel
3- Interior walls to be .032" mill finished stucco embossed aluminum
4- Interior ceilings to be .032" mill finished stucco embossed aluminum, painted white
5- Interior floor to be 1/8" aluminum diamond tread plate floor surface – Grind off aluminum bumps at seams between floors panels so that adjoining floor panels can be pulled and sealed tight to each other
6- Exterior floor to be 26 gauge stucco embossed galvalume
7- Exterior ceiling to be 26 gauge stucco embossed galvalume
8- Exposed exterior ceiling to match exposed exterior wall finish
9- Interior/exterior doors and door frames to be have 36" high 1/8" diamond tread aluminum kick plate, installed flush with remaining finish - remainder of door and frame to be 18 gauge stainless steel and to include a 14" x 14" heated view window in each door
10- Each door to include Modularm model # 75LC digital thermometer and monitoring system installed by the walk-in manufacturer
11- Orient ceiling panels to span shortest distance across walk-in to eliminate or minimize the use of ceiling support rods attached to the structure above

T - Insulation to be 4" thick high pressure impingement mixed, foamed-in-place urethane, minimum 2.2 lb. per cubic foot density, fully heated cured and bonded to metal finishes

U - Minimum R-value for cooler walls, ceilings, and doors is to be R-32

V - Minimum R-value for freezer walls, ceilings, and doors is to be R-32

W - Minimum R-value for freezer floors is to be R-28

X - The insulation shall have a 97% closed cell structure

Y - Assembly of the walk-in is to be accomplished by the use of cam-locking mechanisms

Z - Cam lock spacing on vertical joints shall not exceed 46", or 23" from the junction of vertical and horizontal joints

AA - Cam locks to be foamed-in-place and anchored securely in the panel by steel wings integral to the lock housing

BB - Cam locks to be operated through access ports by the use of a hex wrench

CC - Access ports are to be on the walk-in interior and are to be covered by vinyl snap-in caps after final assembly

DD - Provide and install the following extra light fixtures:
1- Cooler section to include two (2) additional light fixtures
2- Freezer section to include three (3) additional light fixtures

EE - Heated vent port for the freezer

FF - Provide and install matching stainless steel closure panels between walk-in walls and building walls - Closure panels to be constructed of the same material as the exposed exterior walk-in walls

GG - Provide and install matching stainless steel closure panels from face of walk-in to a height of 1" above finished ceiling – Closure panels to be constructed of the same material as the exposed exterior walk-in walls

HH - Provide and install bumper rail on exposed walk-in surfaces - bumper rail to have black rubber bumper insert installed in extruded aluminum channel fastened at 10" and 34" above finished floor

II- All light fixtures to be furnished with LED bulbs, fixtures to be vapor proof globe style fixtures

JJ - Entire walk-in to be installed by a factory authorized installer, proof of authorization must be submitted on the manufacturer's letterhead and included with the shop drawing submittal – shop drawing submittal will not be reviewed without this information.

ITEM 2. REFRIGERATION RACK SYSTEM by COLDZONE or COOLTECH

This refrigeration system is to be a pre-engineered and factory assembled unit, trade name "Mini-Pak" air-cooled outdoor refrigeration system. This rack system is to be located outdoors on the building roof in the area above the walk-in cooler or location as directed by the architect. The estimated total line run is approximately 100' and designed to service Item 1 Walk-in Cooler/Freezer.

This unit is to be an air-cooled model # MPL-2 provided with the following features and accessories:

The system shall be housed in a single, compact rustproof cabinet. The unit shall utilize a single-circuited air-cooled condenser. The frame and base shall be comprised of 16 and 10-gauge all welded sheet steel, respectively. Hot-air discharge from the condenser fans shall be horizontal.

Fan blades shall be covered with a plastic coated fan guard. The unit shall be provided with compressor and air-cooled condenser operating within the recommended range of suction and discharge pressures.

Each condensing system shall be equipped with dual pressure controls, suction-line vibration eliminator, and oversized receiver -- all of which shall be factory assembled.

Each condensing unit shall be equipped with a properly sized receiver with pump-down capacity large enough to accept the total liquid volume of refrigerant for all systems without exceeding 80% of its volumetric capacity. Each receiver shall be equipped with "king and queen" valves with service ports.

All compressor units shall be new factory assembled to operate with the refrigerant as noted above.

ELECTRICAL CONTROL PANEL

The refrigeration system shall have a factory-mounted and pre-wired (NEMA 3 EQV.) electrical control panel complete with industrial grade interlocked main-fused disconnect with separate compressor and fan motor circuit breakers, contactors and defrost time clocks for single point power connection. A photo etched wiring diagram made up of a .012 aluminum plate shall be permanently affixed inside the control panel.

PRE-PIPING

All refrigerant lines shall be type "L" tubing and extended to one side of the package in a neat and orderly manner with ends of lines capped and identified by system using photo-etched tags. All tubing shall be securely supported and anchored with uni-strut clamps. Suction lines shall be wrapped and insulated to prevent condensate accumulation. All piping shall be pressure-tested at the factory with nitrogen at 150 psi for low side and 400 psi for high side.

EVAPORATOR COILS

The evaporator coils shall include a compressor BTU matched low-profile end mount coil, thermostat, thermal expansion valve and liquid-line solenoid valve shipped loose.

INCLUSIONS

This system shall include but not be limited to the following components:

A - 1.0 H.P. medium temperature refrigeration system for Item 1 walk-in cooler with model # ZS09KAE redundant compressor and model # CL6A094ADA evaporator coils operating at 35°
B - 4.0 H.P. low temperature refrigeration system for Item 1 walk-in freezer with model # ZF13K4E redundant compressor and model # CL6E105DDA evaporator coils operating at -10°
C - System to utilize R-448A refrigerant
D - Compressor sized to operate at 95° ambient temperature
E - System supplied with mounted liquid line filter drier and sight glass
F - System supplied with factory installed suction line kit including line filter and piping
G - Heated and insulated receiver for low ambient conditions to be factory installed
H - Main fused disconnect switch
I - Each compressor supplied with crankcase heater and head pressure control
J - Evaporator fan motors to be high efficiency EC motors
K - Low temperature system supplied with suction line accumulator
L - Coils supplied with EcoNet defrost control system

REFRIGERATION INSTALLATION

Obtain all permits required for this installation, mount evaporator coils, provide and install refrigerant piping, fittings, hangers, support, hook-up and start-up as per manufacturers preparation and start-up procedures.

All copper tubing shall be refrigerant grade type "L". Sil-fos 15 shall be used, not soft solder. Insulate refrigerant piping as required with armaflex insulation. After the system and unit cooler have been connected, the balance of the system shall be leak-tested with all valves open.

The complete system shall be evacuated with a vacuum pump. Each system shall be charged with the refrigerant as specified by the manufacturer. Test and adjust each condensing unit to make the system operational.

Provide type "L" copper drain lines for walk-in refrigerators and freezers, pitched 1/4" per foot of run. Drain to be "P" trapped outside of refrigerated space to avoid entrance of warm, moist air or vermin. Provide drain line heater wrapped around the drain line for each unit cooler inside the freezer compartment. This drain line heater is to be insulated with Armaflex.

Entire system to be installed by ColdZone factory authorized installer, proof of factory authorization to be provided along with the submittal shop drawing.

Refer to general specifications of this spec section for additional details and requirements related to the refrigeration system installation.

ITEM 3. COOLER SHELVING by METRO (Five Sections of Shelving Required)

This "Metroseal 3" shelving with "Super Erecta Shelf Design" is to have the following features and accessories:

A - 12-year limited warranty against rust formation
B - Self-sealing hydrated chromate base layer
C - Epoxy coating with microban
D - Provide with adjustable wedges and corner release system
E - Capacity of 800 pounds for shelves under 48" in length and 600 pounds for shelves over 48" in length
F - Shelves adjustable in 1" increments

Each shelving section is to include four (4) shelves, four (4) posts, two (2) swivel casters and two (2) swivel brake casters. This shelving is to consist of the following components:

A - Twenty (20) model # 2442NK3 shelves
B - Twenty (20) model # 63UPK3 posts
C - Ten (10) model # 5MP 5" non-marking polyurethane swivel casters
D - Ten (10) model # 5MPB 5" non-marking polyurethane swivel casters with brakes

ITEM 4. MOBILE PAN RACK by NEW AGE or CRESCOR (Five Required)

These mobile pan racks are to be model # 1335 and are to include the following features and accessories:

A - Capacity of eighteen (18) 18" x 26" sheet pans on 3” centers
B - Universal angle to hold 18” x 26” and 12” x 20” pans
C - Lifetime construction warranty
D - Constructed of aluminum
E - Four (4) 5" platform type casters
F - Corner bumpers

ITEM 5. FREEZER SHELVING by METRO (Six Sections of Shelving Required)

This "Metroseal 3" shelving with "Super Erecta Shelf Design" is to have the following features and accessories:

A - 12-year limited warranty against rust formation
B - Self-sealing hydrated chromate base layer
C - Epoxy coating with microban
D - Provide with adjustable wedges and corner release system
E - Capacity of 800 pounds for shelves under 48" in length and 600 pounds for shelves over 48" in length
F - Shelves adjustable in 1" increments

Each shelving section is to include four (4) shelves, four (4) posts, two (2) swivel casters and two (2) swivel brake casters. This shelving is to consist of the following components:

A - Eight (8) model # 2442NK3 shelves
B - Twelve (12) model # 2448NK3 shelves

C - Four (4) model # 2460NK3 shelves
D - Twenty-four (24) model # 63UPK3 posts
E - Twelve (12) model # 5MP 5" non-marking polyurethane swivel casters
F - Twelve (12) model # 5MPB 5" non-marking polyurethane swivel casters with brakes

ITEM 6. FREEZER DUNNAGE RACK by SPG

This dunnage rack is to be model # 4H2050 and is to be provided with the following features and accessories:

A - Constructed of heavy duty 6063 aluminum
B - Slotted tops
C - 2200 lb. load capacity
D - 1 ½" square aluminum tube welded horizontally on 4 ½" centers
E - 24" x 60" foot print

ITEM 7. DRY STORAGE SHELVING by METRO (Seven Sections of Shelving Required)

This "Metroseal 3" shelving with "Super Erecta Shelf Design" is to have the following features and accessories:

A - 12-year limited warranty against rust formation
B - Self-sealing hydrated chromate base layer
C - Epoxy coating with microban
D - Provide adjustable wedges and corner release system
E - Capacity of 800 pounds for shelves under 48" in length and 600 pounds for shelves over 48" in length
F - Shelves adjustable in 1" increments

Each shelving section is to include four (4) shelves, four (4) posts, two (2) swivel casters and two (2) swivel brake casters. This shelving is to consist of the following components:

A - Twenty (20) model # 2448NK3 shelves
B - Four (4) model # 2454NK3 shelves
C - Four (4) model # 2460NK3 shelves
D - Twenty-eight (28) model # 74UPK3 posts
E - Fourteen (14) model # 5MP 5" non-marking polyurethane swivel casters
F - Fourteen (14) model # 5MPB 5" non-marking polyurethane swivel casters with brakes

ITEM 8. MOBILE CAN RACK by CHANNEL

This can rack is to be model # CSR-156M and is to include the following features and accessories:

A - All welded construction
B - Fitted with polyurethane plate casters
C - Two swivel casters and two with brakes
D - Capacity of 156 #10 cans
E - First in first out design

ITEM 9. ADA HAND SINK with FAUCET by ADVANCE TABCO

This ADA Hand Sink is to be model # 7-PS-25 and is to be provided with the following features and accessories:

A - Deep drawn 16” x 14” x 5” sink bowl
B - Sink bowl to be 2” deep at the front sloping to 5” deep at the rear
C - Countertop die formed recessed edge with a 3/8” no-drip offset
D - Constructed of type 304 stainless steel
E - Model # K-310 drain strainer basket
F - 6” Extended deck mounted gooseneck faucet with wrist handles & deck mounted liquid soap dispenser
G - Stainless steel welded side splashes

ITEM 10. WORK TABLE WITH OVERSHELF AND TIER OF DRAWERS by CUSTOM FABRICATOR

This work table with overshelf and tier of drawers is to be constructed as per the detailed drawings, custom fabrication details and general specifications.

ITEM 11. CAN OPENER by EDLUND

This can opener is to be model # S-11 and is to be provided with the following features and accessories:

A - NSF certified
B - Quick change gear
C - Stainless steel slide bar and pull pin
D - Replaceable base insert for a tighter fit and easier slide action

ITEM 12. UTILITY CART by LAKESIDE, EAGLE or PIPER (Two Required)

These three tier carts are to be model # 422 and are to be provided with the following features and accessories:

A - Three stainless steel shelves welded to angle legs
B - Stainless steel caster frame
C - Standard 1˝-high upturn on ends and rear of top and center shelves
D - Four 4˝-diameter swivel plate casters
E - 1˝-diameter stainless steel handle at one end
F - Corner bumpers

ITEM 13. WORK TABLE WITH SINKS AND TIERS OF DRAWERS by CUSTOM FABRICATOR with FAUCET by T&S

This custom fabricated work table with sinks and tiers of drawers is to be constructed as per the detailed drawings, custom fabrication details and general specifications.

The T&S faucet is to be model # B-0221 and is to be provided with the following features and accessories:

A - Swivel base faucet
B - Deck mount mixing faucet on 8" centers
C - Lever handles

D - 12" swivel nozzle

ITEM 14. SHELVING by METRO (One Section Required)

This "Metroseal 3" shelving with "Super Erecta Shelf Design" is to have the following features and accessories:

A - 12-year limited warranty against rust formation
B - Self-sealing hydrated chromate base layer
C - Epoxy coating with microban
D - Provide with adjustable wedges and corner release system
E - Capacity of 800 pounds for shelves under 48" in length and 600 pounds for shelves over 48" in length
F - Shelves adjustable in 1" increments

Each shelving section is to include four (4) shelves, four (4) posts, two (2) swivel casters and two (2) swivel brake casters. This shelving is to consist of the following components:

A - Four (4) model # 2460NK3 shelves
B - Four (4) model # 74UPK3 posts
E - Two (2) model # 5MP 5" non-marking polyurethane swivel casters
F - Two (2) model # 5MPB 5" non-marking polyurethane swivel casters with brakes

ITEM 15. SPARE NUMBER

ITEM 16. SPARE NUMBER

ITEM 17. TYPE I HOOD by CADDY, Z-Vent, or HALTON

This Type I exhaust hood is to be a model # SHBC-C-W-186-ND-66 and is to be provided in one (1) section with size and shape as shown on the equipment plan (FS101) and details as noted on the mechanical connection plan and detail sheet (FS104). This hood is to be provided with the following features and accessories:

A - Dimensions: Approximately 15’-6” long x 5’-6" deep x 2'-0" high
B - Hood shall be of the high velocity, dry centrifugal extractor type
C - Centrifugal grease extraction to be accomplished within the grease extraction chamber by means of strategically placed baffles located within the path of the high velocity air passing through the chamber. All baffles shall extend the full length of the ventilator. Grease extraction efficiencies to be not less than 90%. All extractor cartridges shall be fully removable. No fixed in place baffles are acceptable.
Extractors to be easily removable from the floor by means of an extractor removal tool
D - Hood shall be equipped with a pitched trough with a removable grease collection located at one end
E - Hood shall operate as designed, utilizing exhaust air quantities as portrayed on the drawings
F - Hood shall be equipped with necessary hanger brackets at front and rear, for suspending from building overhead. Entire top perimeter at front and sides of

hood shall be fully enclosed with matching removable stainless steel closure panels (if necessary) to minimum height of 1" above the finished ceiling.

G - Hood shall be equipped with five (5) globe style light fixtures with LED bulbs. Fixtures shall be vapor and greaseproof globe style fixtures, UL Listed for use in commercial kitchen hood applications. Light fixtures shall be factory pre-wired to a single connection point and include LED bulbs.

H - Hood to be UL Listed under the category "Grease Extractors for Exhaust Ducts", UL 710, in compliance with all recommendations of the National Fire Protection Association's standards for kitchen cooking equipment ventilators, approved by the National Sanitation

I - Foundation, approved by BOCA and ICBO, and be in accordance with all local codes having jurisdiction

J - Hood to be constructed of all stainless steel, # 18 gauge type 304, #4 finish, all welded, grease and water tight. No material other than that described above shall be deemed acceptable

K - The top of the hood canopy shall be reinforced with a 16 ga s/s channel running the length of the hood

L - Hood shall be mounted at 6'-8" AFF to bottom of front face

M - Hood to include double wall construction at the rear to create a 3" air gap for 0" clearance to combustibles

N - Equipped with temperature sensors mounted in exhaust duct collars of hood

O - Hood mounted control panel to control hood lights, fans, and interlocking of the temperature sensors, exhaust and supply fans for the exhaust hood.

P - Control panel and temperature sensors to automatically activate hood fans when temperature in exhaust duct reaches 90°F

Q - Control panel to control the shutdown of the supply air fan during fire safety mode

R - Provide removable sliding balancing dampers for exhaust and supply duct collars.

S - Hood manufacturer to provide stamped engineer drawings if required by the authority having jurisdiction, service to include one stamped set with additional sets required at the cost of the contractor

T - Hood to be supplied with full length ceiling supply plenum, with 40% open stainless steel perforated panels and volume control damper for discharge of tempered make- up air

I- Control panel to include interlocks to remote wall mounted fan and light switches, switches furnished and installed by electrical contractor

ITEM 18. FIRE SUPPRESSION SYSTEM by ANSUL

This fire suppression system is to be model # R-102 for the Type I Hood (Item 17) and is to be as follows:

A - Total system to include the following:

1 - The fire suppression system shall be the pre-engineered, liquid agent, cartridge- operated type with a fixed nozzle agent distribution network -It shall be listed with Underwriters Laboratories, Inc. (UL)

2 - The system shall be capable of automatic detection and actuation or remote manual actuation

3 - The system shall have fire suppression capabilities for the following hazard areas: ventilating structures including hoods, ducts, plenums, and filters;

deep fat fryers; griddles and range tops; upright, natural charcoal, or chain-type broilers; electric, lava rock, mesquite or gas radiant char-broilers

4 - A systems owner's manual shall be provided containing basic information pertaining to system operation. A detailed technical manual shall provide system description, design, installation, recharge, and maintenance procedures, plus accessory installation and reset instructions.

B - The system shall be installed and serviced by authorized distributors that are trained and certified by the manufacturer

C - System equipment is to include the following:

1- The extinguishing agent shall be a potassium carbonate, potassium acetate-based formulation designed for flame knockdown and securement of grease related fires - It shall be available with instructions for liquid agent handling and usage

2- The agent tank(s) shall be installed in a stainless steel enclosure or wall bracket - The tank(s) shall be stainless steel

3- The tank(s) shall have a nominal capacity of either 1.5 gallon or 3 gallon with a working pressure of 100 psi, a test pressure of 300 psi, and a minimum burst pressure of 600 psi

4- The tank(s) shall include an adapter/tube assembly - The adapter shall be chrome-plated steel with a 1/4-18 NPT female inlet and a 1/2-14 NPT male outlet - The pick-up tube shall be carbon steel -1.2 in. O.D. by .028 wall - A vent plug shall be integral to the adapter

D - The regulated release mechanism shall be the spring-loaded, mechanical/pneumatic type capable of providing the expellant gas supply to one or two agent tanks, depending on the capacity of the nitrogen cartridge used. It shall contain a factory installed regulator deadset at 100 psi with an internal relief of approximately 145 psi

- In the "armed" position; the main spring force to the puncture pin piston shall be 150 pound

E - The mechanism shall have a visual indicator of the cocked or fired condition without having to open the enclosure

F - The regulated release mechanism shall have the following actuation capabilities: automatic actuation by a fusible link detection system; remote manual actuation by a mechanical pull station

G - The regulated release mechanism shall be compatible with mechanical gas line shut- off devices; or, when equipped with a field or factory-installed solenoid and switch, it shall be compatible with electric appliance shut-off devices

H - If more than two agent tanks are required, the regulated actuator(s) shall be available to provide expellant gas for additional tank(s) - It shall be connected to the cartridge receiver outlet of the regulated release mechanism providing simultaneous agent discharge - It shall contain a regulated actuator deadset at 100 psi with an internal relief of approximately 145 psi

I - The regulated actuator assembly shall contain a regulated actuator, regulator, expellant gas hose, and agent tank housed in a stainless steel enclosure with cover - The enclosure shall contain knockouts to permit installation of expellant gas line

J - The tank/bracket assembly shall contain a welded steel bracket and agent tank -

The bracket shall be provided to mount the agent tank in a minimum amount of space - The tank shall be secured with hinged brackets.

K - Each discharge nozzle shall be tested and listed with the system for specific applications - The nozzle tip shall be chrome-plated brass, and stamped with the part number and flow rating - The nozzle tip retainer and body shall be chrome plated brass - The nozzle strainer shall be brass with stainless 50 mesh screen

L - Each nozzle tip shall be covered by a stainless steel protective blow-off cap

M - The regulated release mechanism shall be compatible with a fusible link detection system

N - The fusible link shall be selected and installed according to the operating temperature in the ventilation system

O - A detector bracket/linkage assembly shall support the fusible link. The detector bracket shall be 16-gauge cold-rolled stainless steel

P - The detector linkage shall be aluminum.

Q - The detector bracket/linkage assembly shall have provisions for connecting 1/2" rigid or EMT thin-wall conduit, and 1/16" diameter flexible stainless steel rope. Changes in direction of the conduit and steel rope shall be accomplished with die cast aluminum alloy, 90 degree pulley elbows

R - All exposed conduits are to be chrome plated

S - If the release mechanism is not accessible for manual actuation, a remote manual pull station(s) shall be provided as the primary means of manual actuation

T - The pull station(s) shall be the recessed type, with conduit run within the walls

U - The pull station(s) shall be the break-rod type, and shall be connected to the release mechanism trip lever by means of a 1/16" diameter stainless steel rope and 1/2" conduit (chrome plated conduit where exposed)

V - The pull station(s) shall be located at a distance not more than 125 feet from the release mechanism

W - The mounting height and location of the pull station shall be in accordance with the authority having jurisdiction

X - A UL listed, electric snap-action switch shall be provided to shut off electrical power to appliances or to activate electrically operated devices. The switch shall allow for connection to the building alarm system - A relay must be supplied if the equipment load exceeds the rated capacity of the switch

Y - This system shall conform to all local, state and national codes having jurisdiction in this location

Z - The installer shall provide one-year service and inspection free of additional charge AA - Provide stamped engineer drawings if required by the authority having jurisdiction,

service to include one stamped set with additional sets required at the cost of the contractor

BB - Pull stations for the fire suppression system are required to have color and numerical coded signs that correspond with the hood they service. Sign shall be engraved type with foam adhesive backing. Minimum size shall be no less than 2” x 5”.

Corresponding signs shall be placed at pull stations and on the hoods they service. Signs shall comply with any requirements set forth by the local and state authorities having jurisdiction.

CC - Provide swivel union joints and Ansul flexible distribution hoses with restraining devices for nozzles servicing Item 24.

ITEM 19. STAINLESS STEEL WALL PANELS by CUSTOM FABRICATOR

These stainless steel wall panels are to be constructed as per the detailed drawings, custom fabrication details and general specifications.

ITEM 20. TWO BURNER RANGE by GARLAND or VULCAN with GAS QUICK DISCONNECT by DORMONT and EQUIPMENT POSITIONING DEVICE by DORMONT

This two-burner range is to be model # C18-7S and is to be provided with the following features and accessories:

A - Stainless steel front, sides, front rail and burner box
B - Mounted on 6” stainless steel adjustable legs
C - Two (2) 40,000 BTU open burners
D - Removable ring grate bowl over each burner
F - Cast iron top grates
G - One piece Stainless Steel drip tray
H - 3/4” Rear gas connection with pressure regulator I - Cap and cover both ends of front manifold
J - Mounted on a set of 5” diameter polyurethane non-marking swivel casters with front casters having brakes
K - Stainless steel door for cabinet base

The Dormont Manufacturing Company gas quick disconnect kit is to be a model # 1675KIT2S Supr-Safe Gas Connector Kit with Supr-Swivel. Length to be 48"

The Dormont Manufacturing Company Equipment Positioning Device is to be a model # PS

ITEM 21. DOUBLE DECK CONVECTION OVEN by GARLAND, SOUTHBEND, or US RANGE with GAS QUICK DISCONNECT by DORMONT

This Garland double deck convection oven is to be model # MCO-GS-20-M and is to be provided with the following features and accessories:

A - 60,000 BTU per cavity
B - Each compartment to have .6 HP fan motor with two speed fan control
C - Each compartment to have porcelain enamel oven interior with coved corners
D - Each compartment to have six (6) chrome plated oven racks on 13-position rack guides
E - Stainless steel front, top and sides
F - Each compartment to have 60/40 dependent door design with double pane thermal window in both doors
G - Interior oven cavity lighting
H - 6 ft. cord and plug for each compartment deck I - Factory interipiped to single 1” gas connection
J - Mounted on low profile casters, front casters with brakes

These Dormont Manufacturing Company gas quick disconnect kits are to be model # 16100KIT2S48 Supr-Safe Gas Connector Kit with Supr-Swivel. Length to be 48".

ITEM 22. DOUBLE DECK CONVECTION STEAMER by CLEVELAND with WATER FILTER by EVERPURE, GAS QUICK DISCONNECT by DORMONT, WATER QUICK DISCONNECT by DORMONT and DRAIN WATER TEMPERING DEVICE by COOL DRAIN FLOW, INC.

This Cleveland double deck convection steamer is to be model # 24-CGA-10 and is to be provided with the following features and accessories:

A - Cooking capacity of ten (10) 12” x 20”x 2-1/2” pans, five (5) per compartment
B - Gas fired steam generator, 125,000 BTU
C - Easy access cleaning port
D - Instant steam stand-by mode
E - 14 gauge, type 304 stainless steel construction for compartment door, cavity and steam generator
F - Audible signal for cooking time completion
G - Main power on/off switch with automatic water fill and ignition of gas burners via fully automatic electronic spark ignition
H - Steam cooking distribution system
I - Automatic generator drain with drain cleaning cyclel
J - Automatic probe for water level control
K - “Cool to the Touch” two-piece compartment door. Free floating inner door with reversible gasket for air tight seal
L - Stainless steel slam/latch door latch
mechanism M - Condensate drip trough
N - Door hinged left, controls on right
O - 6” stainless steel legs
P - Steam cut-off switch
Q - Electronic timer with load compensating feature

This Everpure water filter is to be model # EV9797-22 Kleensteam II Twin System

This Dormont Manufacturing Company gas quick disconnect kit is to be model # 1675KIT2S48 Supr-Safe Gas Connector Kit with Supr-Swivel. Length to be 48".

The Dormont water quick disconnect is to be model # W50BP2Q-48. Length to be 48”.

This Cool Drain Flow drain tempering device is to be a model # DTV-15 for use with convection steamers

ITEM 23. MOBILE WORK TABLE by CUSTOM FABRICATOR

This mobile work table is to be constructed as per the detailed drawings, custom fabrication details and general specifications.

ITEM 24. DOUBLE DECK CONVEYOR OVEN by LINCOLN with GAS QUICK DISCONNECT (Two Required) and EQUIPMENT POSITIONING DEVICE by DORMONT

This double deck conveyor oven is consist of two model # 1116-000-U ovens and is to be provided with the following features and accessories:

A - 28” Long Cooking Chamber
B - 250°F to 575°F
C - Self-Contained conveyorized cooking chamber
D - Provided with all hardware and accessories for double stack configuration
E - Mounted on manufacturer’s matching mobile stand for double stacked units
F - #4 Finish stainless steel exterior
G - FastBake option for reduced cook times
H - Digital controls with single on/off switch
I - Microprocessor controlled bake time and conveyor speed
J - Display indicating temperature, belt speed, thermostat, and diagnostic temperatures
K - Front load conveyor
L - removable door
M - 18” wide conveyor
N - Removable and reversible conveyor
O - Designed to cook food using air impigment
P - Four separate and removable air distribution fingers
Q - One (1) year parts/labor warranty
R - Factory programmed to operate from right to left and be field convertible with product stops at both ends of the conveyor
S - Ovens mounted to manufacturer’s matching mobile stand for double stacked units
T - Provided with all hardware and accessories for double stack installation

These Dormont Manufacturing Company gas quick disconnect kits are to be a model # 1675KIT2S48 Supr Safe Gas Connector Kit with Supr-Swivel. Length to be 48".

This Dormont equipment positioning device is to be model # PS

ITEM 25. WORK TABLE WITH SINK by CUSTOM FABRICATOR AND FAUCET by T & S

This custom fabricated work table with sink and tier of drawers is to be constructed as per the detailed drawings, custom fabrication details and general specifications.

The T&S faucet is to be model # B-0221 and is to be provided with the following features and accessories:

A - Swivel base faucet
B - Deck mount mixing faucet on 8" centers
C - Lever handles
D - 12" swivel nozzle
E - B-0199-01F-10 aerator

ITEM 26. ONE SECTION PASS-THRU HEATED CABINET by CONTINENTAL

This one-section pass-thru heated cabinet is to be model # DL1WE-SA-PT and is to be provided with full size doors. The doors are to be hinged as indicated on drawing FS101. This pass-thru heated cabinet is to have the following features and accessories:

A - Stainless steel exterior with aluminum interior
B - Digital exterior thermometer control system with hi/lo alarms
C - Self-contained heating system
D - Equipped with a 1,500 watt heating system

E - 22 cubic foot net capacity
F - Temperature range adjustment from 90 to 180 degrees F
G - Top mounted heating plenum with side mounted duct system
H - Cabinet fully insulated with 3” of non-CFC foam
insulation I - Polished chrome door handles
J - Self-closing doors with magnetic snap in gaskets
K - Each door equipped with cylinder locks
L - Pass-through design
M - Automatic interior lighting
N - Stainless steel strip heaters located in base of each compartment
O - Mounted on 5” casters, two swivel with brakes
P - Interior compartments fully equipped with universal pan slides mounted on 3” centers

ITEM 27. TWO SECTION PASS-THRU REFRIGERATOR by CONTINENTAL

This two section pass-thru refrigerator is to be model # 2RN-SA-PT and is to be provided with full size doors. The doors are to be hinged as shown on drawing FS101. This pass-thru refrigerator is to have the following features and accessories:

A - Stainless steel exterior with aluminum interior
B - Digital exterior thermometer control system with hi/lo alarms
C - Self-contained top mounted refrigeration system
D - Refrigeration system to utilize non ozone depleting refrigerant
E - 50 cubic foot net capacity
F - Automatic electric condensate evaporator
G - Expansion valve style refrigeration system
H - Cabinet fully insulated with 3” of non-CFC foam
insulation I - Polished chrome door handles
J - Self-closing doors with magnetic snap in gaskets
K - Each door equipped with cylinder locks
L - Reach-in design
M - Automatic interior LED lighting
N - Cam action, lift off hinges
O - Top and side mounted air distribution ducts
P - Mounted on 5” casters, two swivel with brakes
Q - Interior compartments fully equipped with six (6) adjustable shelves per compartment
R - Three year parts, labor, and five year compressor warranty

ITEM 28. HAND SINK by ADVANCE TABCO (Two Required)

These hand sinks with faucets are to be model # 7-PS-96 and are to be provided with the following features and accessories:

A - Deep drawn 10” x 14” x 5” sink bowl
B - Countertop die formed recessed edge with a 3/8” no-drip offset
C - Constructed of type 304 stainless steel
D - Model # K-310 drain strainer basket
E - Two (2) stainless steel welded side splashes

F - Built to allow for flush-to-wall mount application
G - Removable access panel
H - Galvanized wall mounting bracket
I - Splash mounted gooseneck faucet furnished with aerator J - Foot pedal valve for water operation

ITEM 29. CONDIMENT COUNTER by PIPER

This condiment counter is to be a customized 3-ST-MOD series unit and is to have the following features and accessories:

A - 14 gauge stainless steel with 1-1/2" turndown
B - 18 gauge stainless steel undershelf
C - 20 gauge stainless steel base cabinet enclosed on all sides with front side containing locking stainless steel doors with adjustable intermediate shelf and fixed bottom shelf
D - Custom plastic laminate finish applied to front , doors, rear, and both ends, to match existing laminate finish on Item 32 or as otherwise directed by architect, verify with architect prior to ordering
E - Top height modified to be 32"-aff with a length of 48" and depth of 30"
F - Entire unit mounted on casters, two swivel caster and to rigid casters, all casters with brakes
G - Piper Project # 40193 to be references as a baseline and to be modified to match these specifications

ITEM 30. MILK COOLER – EXISTING/RELOCATED

ITEM 31. TRAY DISPENSER by CADDY or STERILSIL

This tray dispenser is to be model # CM-1418-CS and is to be provided with the following features and accessories:

A - Self-leveling mechanism to be cantilevered suspension type
B - Removable load platform to be constructed of 18 gauge stainless steel and secured to a 16 gauge stainless steel angle support frame and a pair of cantilevered rust resistant 1/4" steel suspension arms
C - Suspension arms to be securely guided by ball bearing rollers
D - Lower rack storage platform to be formed of 16 gauge stainless steel, channeled on all four sides with two stainless steel reinforced members underneath
E - Equipped with four (4) swivel casters with 4" polyurethane casters
F - Verify tray size with owner prior to finalizing order

ITEM 32. HOT FOOD COUNTER WITH SNEEZE GUARD, HEAT LAMP AND LIGHTS – EXISTING/RELOCATED and DRAIN TEMPERING DEVICE by COOL DRAIN FLOW, INC with NEW TRAYSLIDE by PIPER

This Cool Drain Flow drain tempering device is to be a model # DTV-MINI for use with hot food wells.

Provide unit with Piper solid stainless steel solid ribbed trayslide on hinged brackets set at 32"-AFF and compatible with existing Piper Model # 5HF.

ITEM 33. PASS-THRU COUNTER by PIPER

This pass-thru counter is to be a customized 2-ST-MOD series unit and is to have the following features and accessories:

A - 14 gauge stainless steel with 1-1/2” turndown
B - 18 gauge stainless steel undershelf
C - 20 gauge stainless steel base cabinet enclosed on all sides with worker side open to adjustable intermediate shelf and fixed bottom shelf
D - Custom plastic laminate finish applied to all sides to match existing laminate finish on Item 32 or as otherwise directed by architect, verify with architect prior to ordering
E - Top height modified to be 32”-aff depth of 28” to match adjacent equipment and width of 24”
F - Solid stainless steel ribbed trayslide on hinged brackets mounted at 32”-AFF
G - Entire unit mounted on casters, two swivel casters and to rigid casters, all casters with brakes
H - Interlocking mechanisms to secure unit to adjacent items
I - Provide 120-Volt convenience outlet mounted in base of counter factory pre-wired to a 6’ long cord and plug assembly
J - Bottom shelf to include hole with grommet for access to electrical service below
K - Provide unit with fold down stainless steel plate shelf on worker side, to match shelf design of existing adjacent Item 32
G - Piper Project # 40193 to be references as a baseline and to be modified to match these specifications

ITEM 34. COLD FOOD COUNTER WITH SNEEZE GUARD WITH LIGHTS by PIPER

This cold food counter with sneeze guard and lights is to be a customized 5-CB-MOD series unit and is to have the following features and accessories:

A - 14 gauge stainless steel with 1-1/2” turndown
B - 18 gauge stainless steel undershelf
C - 20 gauge stainless steel base cabinet enclosed on all sides with worker side open to adjustable intermediate shelf and fixed bottom shelf
D - Custom plastic laminate finish applied to all sides to match existing laminate finish on Item 32 or as otherwise directed by architect, verify with architect prior to ordering
E - Top height modified to be 32”-aff depth of 28” to match adjacent equipment
F - Solid stainless steel solid ribbed trayslide on hinged brackets mounted at 32”-AFF
G - Entire unit mounted on casters, two swivel casters and to rigid casters, all casters with brakes
H - Interlocking mechanisms to secure unit to adjacent items
I - Self-contained refrigeration system
J - Cold well unit with capacity of five (5) 12”x20” food pans
K - 1” drain with valve to exit left end of unit from the worker’s side
L - Worker side to include fixed bottom shelf with hole and grommet to exit bottom right end for electrical service below

M - Provide unit with stainless steel square tube self-serve sneeze guard with adjustable front glass, end glass, top glass, LED lights, and to match design of existing guard on Item 32

N - Entire unit including cold pan refrigeration system and sneeze guard light to be factory pre-wired to a 6' long single cord and plug assembly

O - Provide unit with fold down stainless steel plate shelf on worker side, to match shelf design of existing adjacent Item 32

P - Piper Project # 40193 to be references as a baseline and to be modified to match these specifications

ITEM 35. ICE CREAM CABINET by OWNER (Not In Contract)

ITEM 36. CASHIER COUNTER by PIPER

This cashier counter is to be a customized 2-CD-MOD series unit and is to have the following features and accessories:

A - 14 gauge stainless steel with 1-1/2" turndown

B - 18 gauge stainless steel undershelf

C - 20 gauge stainless steel base cabinet enclosed on all sides with worker side open to foot rest and lockable cash drawer with front of unit to include lockable stainless steel doors with fixe bottom shelf and adjustable intermediate shelf

D - Custom plastic laminate finish applied to all sides and doors and to match existing laminate finish on Item 32 or as otherwise directed by architect, verify with architect prior to ordering

E - Top height modified to be 34"-aff with an overall top size of 30" deep and 48" long

F - Solid stainless steel ribbed trayslide on hinged brackets mounted at 32"-AFF

G - Entire unit mounted on casters, two swivel casters and to rigid casters, all casters with brakes

H - Piper Project # 40193 to be references as a baseline and to be modified to match these specifications

ITEM 37. PRETZEL CABINET – EXISTING/RELOCATED

ITEM 38. POINT OF SALE STATION by OWNER'S VENDOR (Not In Contract)

ITEM 39. SPARE NUMBER

ITEM 40. SPARE NUMBER

ITEM 41. SPARE NUMBER

ITEM 42. SOILED DISHTABLE WITH PRE-RINSE SINK by CUSTOM FABRICATOR

This Custom Fabricated soiled dishtable with pre-rinse sink is to be constructed as per the detailed drawings, custom fabrication details and general specifications.

ITEM 43. 3-HP DISPOSER WITH CONTROLS, SOLENOID VALVE, and VACCUM BREAKER – EXISTING/RELOCATED

ITEM 44. PRE-RINSE SPRAY ASSEMBLY – EXISTING/RELOCATED

ITEM 45. DISHMACHINE – EXISTING/RELOCATED

ITEM 46. SPARE NUMBER

ITEM 47. CLEAN DISHTABLE by CUSTOM FABRICATOR

This clean disthable is to be constructed as per the detailed drawings, custom fabrication details and general specifications.

ITEM 48. OVERSHELF by CUSTOM FABRICATOR

This overshelf is to be constructed as per the detailed drawings, custom fabrication details and general specifications.

ITEM 49. THREE BOWL POT AND PAN SINK – EXISTING/RELOCATED and FAUCETS by T & S (Two Required)

This 3-Bowl pot & pan sink is to be existing/relocated.

These T & S faucets are to be model # B-0231 and are to be provided with the following features and accessories:

A - Splash mounted mixing faucet on 8" centers
B - Swivel base faucet
C - Lever handles
D - 12" swivel nozzle
E - Two (2) supply nipples # B-0425
F - Two (2) short elbows # 006895-20

ITEM 50. OVERSHELF WITH POT HOOKS by CUSTOM FABRICATOR

This overshelf with pot hooks is to be constructed as per the detailed drawings, custom fabrication details, and general specifications.

ITEM 51. CLEAN POT & PAN SHELVING by METRO (Four Sections of Shelving Required)

This "Metroseal 3" shelving with "Super Erecta Shelf Design" is to have the following features and accessories:

A - 12-year limited warranty against rust formation
B - Self-sealing hydrated chromate base layer
C - Epoxy coating with microban
D - Provide with adjustable wedges and corner release system
E - Capacity of 800 pounds for shelves under 48" in length and 600 pounds for shelves over 48" in length
F - Shelves adjustable in 1" increments

Each shelving section is to include four (4) shelves, four (4) posts, two (2) swivel casters and two (2) swivel brake casters. This shelving is to consist of the following components:

A - Sixteen (16) model # 2454NK3 shelves

D - Sixteen (16) model # 74UPK3 posts
E - Eight (8) model # 5MP 5" non-marking polyurethane swivel casters
F - Eight (8) model # 5MPB 5" non-marking polyurethane swivel casters with brakes

ITEM 52. CHEMICAL SHELVING by METRO

This "Metroseal 3" shelving with "Super Erecta Shelf Design" is to have the following features and accessories:

A - 12-year limited warranty against rust formation
B - Self-sealing hydrated chromate base layer
C - Epoxy coating with microban
D - Provide with adjustable wedges and corner release system
E - Capacity of 800 pounds for shelves under 48" in length and 600 pounds for shelves over 48" in length
F - Shelves adjustable in 1" increments

Each shelving section is to include four (4) shelves, four (4) posts, two (2) swivel casters and two (2) swivel brake casters. This shelving is to consist of the following components:

A - Four (4) model # 2448NK3 shelves
D - Four (4) model # 74UPK3 posts
E - Two (2) model # 5MP 5" non-marking polyurethane swivel casters
F - Two (2) model # 5MPB 5" non-marking polyurethane swivel casters with brakes

ITEM 53. MOP SINK with FAUCET by ADVANCE TABCO

This mop sink is to be a model # 9-OP-40DF and is to be provided with the following features and accessories:

A - Type 300 stainless steel constructed
B - Seamless deep drawn sink bowl
C - "V" edge on three sides
D - Tile edge on rear
E - Model # K-240 faucet
F - Two (2) short elbows # 006895-20

ITEM 54. EYE WASH STATION by T&S

This eye wash station is to be model # EW-7360B and is to be provided with the following features and accessories:

A - 1/2" inlet for hot and cold water
B - 4-1/2 " centers
C - 3/4” tempered water outlet
D - Tempering valve
E - Stainless steel basin with drain
F - Push lever operated
G - Furnish with model # EW-9201EF thermostatic mixing valve

END OF SECTION 114000

COOPERTOWN ES

FOODSERVICE EQUIPMENT
BROCHURE BOOKLET

March 6, 2025

REFER TO FOOD SERVICE EQUIPMENT SCHEDULE ON FS100 FOR EQUIPMENT LISTING, QUANTITIES AND DESCRIPTIONS.

Manufacturer's specification sheets are not available for custom fabricated items or items noted as being furnished by owner, beverage vendor, or other trades.

TAFCO

Walk-In to Quality

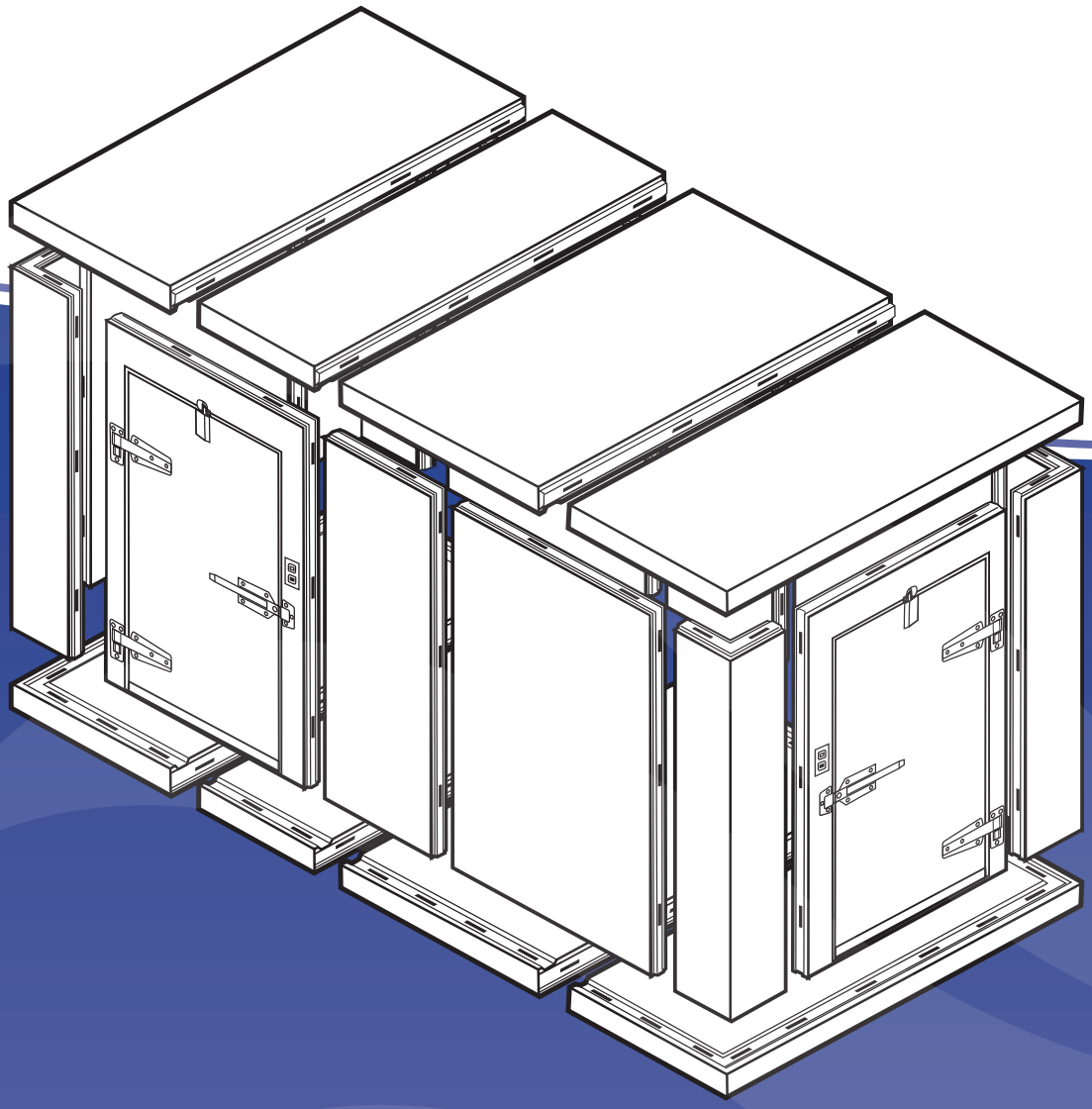

Energy Independence and Security Act of 2007 Compliant

ISO 9001:2008
BUREAU VERITAS
Certification

PRODUCT GUIDE

TAFCO 10 YEAR PANEL WARRANTY

Tafco warrants to the Original Purchaser of the Tafco foamed-in-place panels manufactured and sold by it, to be free from defects in material and workmanship under normal use and service for a period of ten (10) years from the date of original shipment. Painted surfaces shall be warranted 18 months from the date of shipment. All hardware and electrical components (except lights and refrigeration systems, covered separately) are warranted against defects in workmanship under
normal use and service for a period of one year from date of shipment. The obligation of the manufacturer under this warranty shall be limited to repairing or replacing (not including labor) at their option FOB factory, panels, hardware, and electrical components which prove defective within the warranty period.

UNDER NO CIRCUMSTANCES WHATSOEVER SHALL TAFCO BE LIABLE TO PURCHASER, OR TO ANY PERSON, FOR ANY SPECIAL OR CONSEQUENTIAL DAMAGES INCLUDING, BUT NOT LIMITED TO, LOSS OF PRODUCT STORED IN A TAFCO COOLER OR FREEZER OR LOST PROFIT OR BUSINESS OPPORTUNITY. UNDER NO CIRCUMSTANCES SHALL TAFCO BE LIABLE FOR ANY AMOUNT IN EXCESS OF TAFCO PRICE FOR GOODS SOLD BY TAFCO.

THESE WARRANTIES ARE IN-LIEU-OF ALL OTHER WARRANTIES EITHER EXPRESSED OR IMPLIED.

For assistance with a warranty, please contact our Warranty Department.

1395 Industrial Park Road,
Clearfield, PA 16830

PO Box 269
Hyde, PA 16843

Toll Free: (800) 233-1954
Tel: (814) 765-9615
Fax: (814) 765-5410
tafcowalkins.com

M072011-1.5M

Due to continuing development, specifications are subject to change without notice. For more information please contact us.

A R-1 REFRIGERATION RACK OUTLINE DRAWING MPL-2

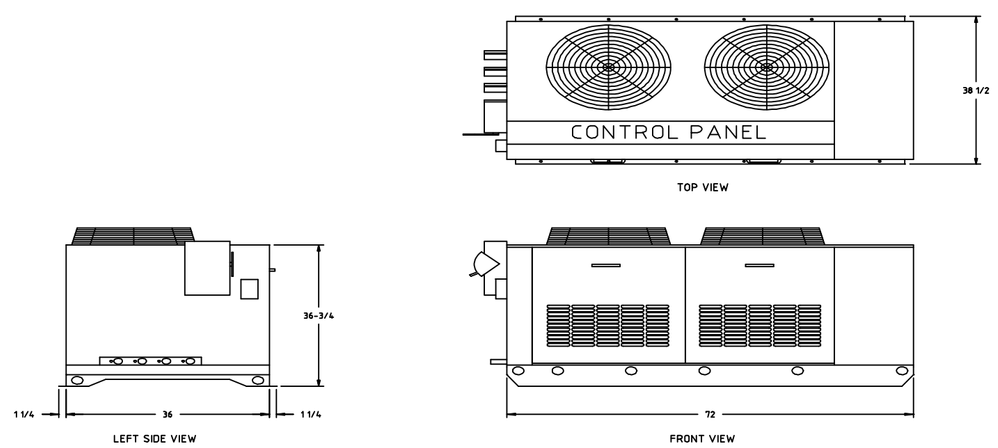

NOTES:
1. TOTAL SYSTEM WEIGHT: 601 LBS
2. INSTALLATION CLEARANCE REQUIRES 3 FT ON ALL SIDES

B R-1 SUGGESTED ROOF PAD DETAILS MPL-2

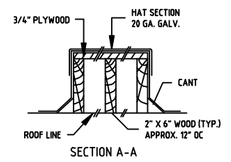

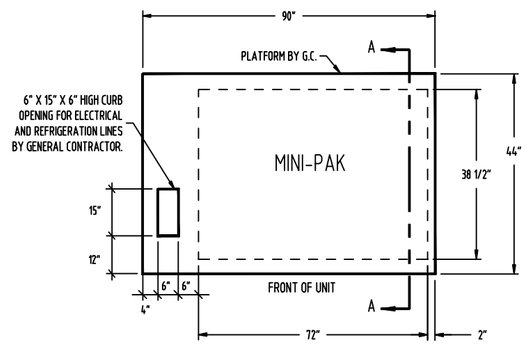

G.C. NOTES

1-PLATFORM TO BE INSTALLED LEVEL.
2-PROVIDE SHEETMETAL HAT SECTION WITH WATER TIGHT SOLDERED JOINTS.
3-BACK FILL OPENING WITH HOT PITCH AFTER INSTALLATION.

G.C. NOTES

1-PLATFORM TO BE INSTALLED LEVEL.
2-PROVIDE SHEETMETAL HAT SECTION WITH WATER TIGHT SOLDERED JOINTS.
3-BACK FILL OPENING WITH HOT PITCH AFTER INSTALLATION.

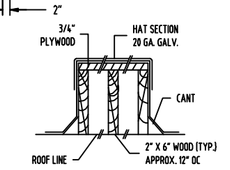

COLDZONE ENGINEERING SUMMARY

POWER SUPPLY: 208-230/3/60
CONNECTED LOAD 28 A
MIIN CIRCUIT AMPACITY 30 A
FUSE SIZE 40 A

IDENT		FIXTURES					COMPRESSORS											EVAPORATOR COILS									CONNECTION SIZES **						ACCESSORIES							
				FIXT.°F						COMPRESSOR ELECTRICAL CHARACTERISTICS									FAN 1PH		HEATER			AMPS												FURNISHED BY (SEE CODE)			
SYSTEM	ITEM NUMBER	DESCRIPTION	FIXTURE LOAD	FIXT. T.	SUCT.	REFRIG. R-	COMPRESSOR MODEL NUMBER	H.P.	RECEIVER CAPACITY LBS. (@ 90%)	% OF LOAD CAPACITY	RLA	V	PH	COOLING CAPACITY (BTUH) AT 95° AMBIENT	DEFROST *	QUANTITY	MODEL NO.	NOMINAL CAPACITY TOTAL	MFR. REMARKS	AMP	V	AMP	V	PH	TOTAL SYSTEM	ROUTE +	SUCTION	LIQUID	DRAIN FITTING - NPT	DEFROST OPTION NO.	CIRCUIT WITH DEFROST TIME CLOCK	HEATED AND INSULATED RECEIVER	SUCTION ACCUMULATOR	SUCTION FILTER	OIL SEPARATOR	TSTAT	SVNOID	EXP VALVE	REMARKS
A	-	Walk-in Freezer	11687	-10	-20	448A	ZF13K4E	4	60.00	113%	11.9	208-230	3	13211	E	1	CL6E105DDA	11904	COLDZONE	1	208-230/1	9.8	208-230	1	11.9		1-1/8	1/2	3/4-14	ECONET	NO	YES	YES	SEALED	YES	FI		FI	
B	-	Walk-in Cooler	10019	35	25	448A	ZS09KAE	1	10.00	111%	7.2	208-230	3	11133	A	1	CL6A094ADA	10464	COLDZONE	1.6	115/1				7.2		5/8	3/8	3/4-14	ECONET	NO	YES	NO	SEALED	NO	FI		FI	

SYSTEM ITEM NO:-	CONDENSER FAN: 2 CONDENSER FAN AMPS: 6.8	LEGEND	*	A-AIR DEFROST G-GRAVITY(W/TIMER) E- ELECTRIC DEFROST DD-DEMAND DEFROST	+	S-SINGLE M-MAIN B-BRANCH	**	VERIFY LINE SIZES WITH JOB SITE CONDITIONS	MFR- FURNISH WITH FIXTURE FL- CZ TO FURNISH AND SHIP LOOSE FI- CZ TO FURNISH AND INSTALL ON UNIT	Z* - MULTIPLE EVAPORATORS TIED TO ONE COMPRESSOR TO BE BONDED BY OTHERS RC- FURNISH AND INSTALL BY REF. CONTRACTOR

NOTE:
CONDENSER SELECTED FOR 500 FEET ELEVATION AND 95°F AMBIENT TEMPERATURE
ALL COMPRESSOR CIRCUITS INDIVIDUALLY PIPED WITH SEALED LIQUID AND SUCTION FILTERS, CRANKCASE HEATERS, AND HEAD PRESSURE CONTROL VALVES
ELECTROMECHANICAL CONTROLS PER COMPRESSOR WITH HIGH/LOW PRESSURE SWITCHES
POWDER COATED STEEL CABINET PANELS
SYSTEMS WITH HEATED/INSULATED RECEIVERS FOR LOW AMBIENT OPERATION

GENERAL NOTES

REFRIGERATION PIPE SIZES ARE BASED ON A MAXIMUM LINE RUN OF 100 EQUIVALENT FEET FOR LIQUID AND SUCTION LINES. THIS INCLUDES AN ALLOWANCE OF 45 EQUIVALENT FEET FOR VERTICAL RISERS. LINE RUNS LONGER THAN 100 EQUIVALENT FEET MAY VOID THE LINE SIZES INDICATED ON OUR SUBMITTAL DRAWING

IT IS THE INSTALLING CONTRACTORS RESPONSIBILITY TO FOLLOW ALL APPLICABLE CODES AND CURRENT REFRIGERATION INDUSTRY STANDARDS AND PRACTICES WHEN DETERMINING LINE SIZES, AND INSTALLING AND STARTING UP COLDZONE EQUIPMENT

EVAPORATOR AND PIPING SERVICE / ISOLATION VALVES ARE RECOMMENDED FOR PARALLEL AND MULTIPLEX SYSTEMS. THESE VALVES ARE TO BE SUPPLIED AND INSTALLED BY THE INSTALLING CONTRACTOR.

C R-1 ELECTRICAL INSTALLATION

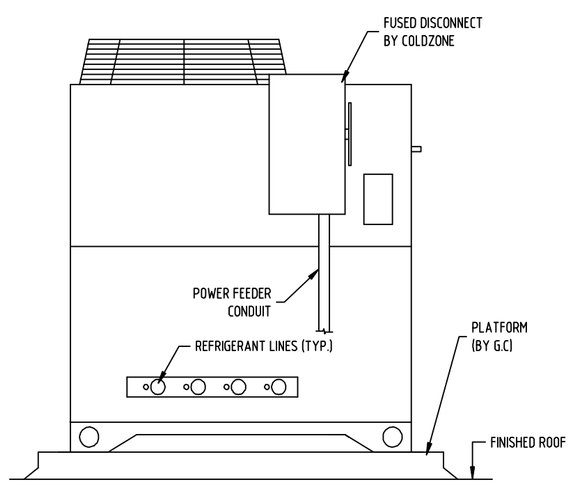

D R-1 COLDZONE EVAPRATOR COIL LOW PROFILE

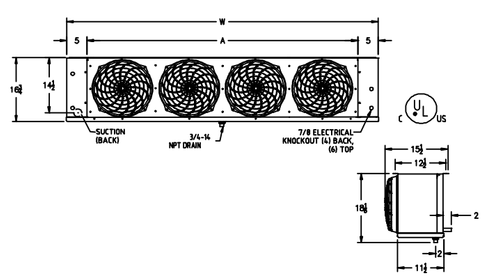

EVAPORAOTR COIL(S) INCHES						
MODEL NUMBER	QTY	FIGURE	NO. OF FANS	W	A	WEIGHT (LBS. EACH)
CL6E105DDA	1	1	2	43-5/8	43-5/8	62
CL6A094ADA	1	1	2	43-5/8	43-5/8	55

REFRIGERATION SYSTEM ELECTRICAL SCHEDULE / POWER SUPPLIED BY ELECTRICAL CONTRACTOR						
ITEM NO.	QTY.	DESCRIPTION	VOLTAGE/PH	AMPS	MCA	MOPD
-	1	MPL-2	208-230/3/60	28	30	40
A	1	CL6E105DDA	208-230/1		15	20
B	1	CL6A094ADA	115/1		15	20

ENGINEERING GUIDE TO SPECIFICATION
FOR REMOTE REFRIGERATION PACKAGE
MINI-PAK REFRIGERATION SYSTEM

THE REFRIGERATION PACKAGE SHALL BE A PRE-ENGINEERED AND FACTORY ASSEMBLED UNIT. TRADE NAME "MINI-PAK". AS MANUFACTURED BY COLDZONE, A DIVISION OF HEAT TRANSFER PRODUCTS GROUP, 1810 VINEYARD AVE. ONTARIO, CA 91761. PHONE: (800) 772-2653, FAX: (714) 529-8503.

CONTRACTOR SHALL FURNISH AND INSTALL, WHERE SHOWN ON PLANS, (1) COLDZONE U.L. APPROVED "MINI-PAK".

1. MINI-PAK REFRIGERATION SYSTEM
   THE ENTIRE UNIT IS TO BE WEATHER-PROOFED AND MINIMUM OF TWO COATS OF PAINT SHALL BE APPLIED TO MAKE THE UNIT RUST-PROOF. THE UNIT SHALL BE PROVIDED WITH MULTI-CIRCUITED AIR-COOLED CONDENSER FOR COOLER, FREEZER AND ICE MACHINES. SUCTION LINE FOR LOW TEMPERATURE UNIT MUST BE INSULATED WITH ARMAFLEX.

2. REFRIGERATION UNITS
A. CRANKCASE HEATER SHALL BE PROVIDED WITH EVERY COMPRESSOR.
B. AIR-COOLED CONDENSING UNITS SHALL BE SEMI-HERMETIC, HERMETIC OR GLACIER SCROLL TYPE (COPELAND). EACH UNIT SHALL BE EQUIPPED WITH HIGH-LOW PRESSURE CONTROL, LIQUID LINE DRIER, SIGHT GLASS, SUCTION AND DISCHARGE VIBRATION ELIMINATOR, AND HEAD PRESSURE CONTROL.
C. ALL COMPRESSOR UNITS SHALL BE NEW AND FACTORY ASSEMBLED TO OPERATE WITH THE REFRIGERANT SPECIFIED IN THE ENGINEERING SUMMARY SHEET.

3. PRE-PIPING
A. ALL COPPER TUBING TO BE REFRIGERANT GRADE A.C.R. OR TYPE "L".
B. ALL TUBING SHALL BE SECURELY SUPPORTED AND ANCHORED WITH CLAMPS.
C. ALL REFRIGERANT LINES SHALL BE EXTENDED TO ONE SIDE OF THE PACKAGE IN A NEAT AND ORDERLY MANNER.
D. SILVER SOLDER AND/OR SIL-FOS SHALL BE USED FOR ALL REFRIGERANT PIPING. SOFT SOLDER IS NOT ACCEPTABLE.
E. ALL PIPING TO BE PRESSURE TESTED WITH NITROGEN AT 300 PSI. AFTER THE CONDENSING UNIT AND COIL HAVE BEEN CONNECTED, THE BALANCE OF THE SYSTEM SHALL BE LEAK TESTED WITH ALL VALVES OPEN.

4. CONTROL PANEL
A. THE PACKAGE SHALL HAVE FACTORY MOUNTED AND PRE-WIRED CONTROL PANEL COMPLETE WITH INTERLOCKED MAIN FUSED DISCONNECT, COMPRESSOR CIRCUIT BREAKERS, CONTACTORS AND TIME CLOCKS WIRED FOR SINGLE POINT POWER CONNECTION.
B. ELECTRICAL CONTRACTOR SHALL PROVIDE AND INSTALL MAIN POWER LINES TO PANEL, AND USE WIRE HARNESS WIRING FOR CONTROL AND DEFROST HEATER BETWEEN THE DEFROST CLOCK AND THE REFRIGERATION FIXTURES, ALL IN ACCORDANCE WITH THE WIRING DIAGRAM AND LOCAL CODES.

GENERAL NOTES

1. GENERAL CONTRACTOR
A. CONTRACTORS SHALL VERIFY ALL DIMENSIONS AND COORDINATE WITH OTHER TRADES.
B. GENERAL CONTRACTOR SHALL PREPARE AND WEATHERPROOFING THE PLATFORM AND CURBED OPENINGS.

2. REFRIGERATION CONTRACTOR
A. THE COMPLETE SYSTEM SHALL BE EVACUATED WITH VACUUM PUMP.
B. ALL COPPER TUBING TO BE REFRIGERANT GRADE A.C.R. OR TYPE "L".
C. CHARGE, TEST, AND ADJUST EACH UNIT TO BE IN AN OPERATIONAL SYSTEM.
D. SILVER SOLDER AND/OR SIL-FOS SHALL BE USED FOR ALL REFRIGERANT PIPING. SOFT SOLDER IS NOT
E. ALL PIPING TO BE PRESSURE TESTED WITH NITROGEN AT 300 PSI. AFTER THE CONDENSING UNIT AND COIL HAVE BEEN CONNECTED, THE BALANCE OF THE SYSTEM SHALL BE LEAK TESTED WITH ALL VALVES OPEN.
F. REFRIGERATION CONTRACTOR TO PROVIDE AND INSTALL DRAIN LINE HEATER IN FREEZER TO BE CONNECTED BY ELECTRICAL CONTRACTOR

3. ELECTRICAL CONTRACTOR
A. ELECTRICAL CONTRACTOR TO PROVIDE POWER FROM REFRIGERATION PACKAGE AND CONNECT CONTROL AND DEFROST SYSTEM AS CALLED FOR IN THE WIRING DIAGRAM.
B. ALL ELECTRICAL WIRING AND INSTALLATION SHALL BE IN ACCORDANCE WITH THE WIRING DIAGRAM AND LOCAL CODES.

4. PLUMBING CONTRACTOR
A. PLUMBING CONTRACTOR TO PROVIDE HARD A.C.R. OR TYPE "L" COPPER DRAIN LINES FOR WALK-IN REFRIGERATOR AND FREEZER, PITCHED 1/4" PER FOOT OF RUN. IN FREEZER, UNHEATED DRAIN LINE MUST BE OUTSIDE OF FREEZER WALL TO PREVENT FREEZING. TRAP DRAIN LINE OUTSIDE OF REFRIGERATED SPACE TO AVOID ENTRANCE OF WARM AND MOIST AIR.
B. PLUMBING CONTRACTOR TO PROVIDE INDIVIDUAL DRAIN LINE FOR EACH EVAPORATOR UNLESS OTHERWISE CALLED FOR.
C. ALL PLUMBING INSTALLATION SHALL BE IN ACCORDANCE WITH LOCAL CODES.

F R-1 WIRING DIAGRAM FOR W/I COOLER EVAPORATOR COIL

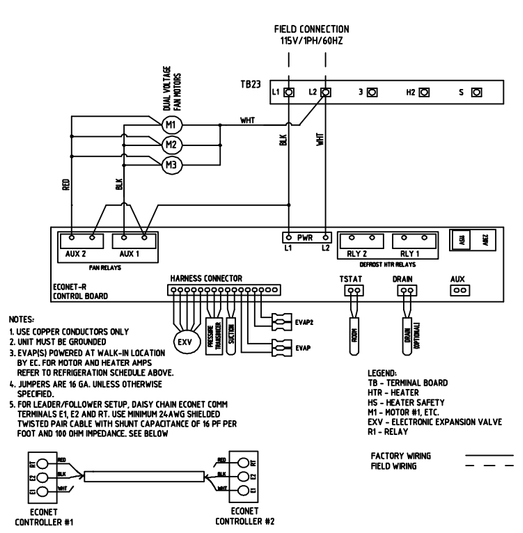

NOTES:
1. USE COPPER CONDUCTORS ONLY
2. UNIT MUST BE GROUNDED
3. EVAPRIO POWERED AT WALK-IN LOCATION BY EC. FOR MOTOR AND HEATER AMPS REFER TO REFRIGERATION SCHEDULE ABOVE.
4. JUMPERS ARE 16 GA. UNLESS OTHERWISE SPECIFIED.
5. FOR LEADER/FOLLOWER SETUP, DAISY CHAIN ECONET COMM TERMINALS ELEV AND HT. USE MINIMUM 24AWG SHIELDED TWISTED PAIR CABLE WITH SHUNT CAPACITANCE OF 16 PF PER FOOT AND 100 OHM IMPEDANCE. SEE BELOW

LEGEND
LB - TERMINAL BOARD
HTR - HEATER
HS - HEATER SAFETY
M1 - MOTOR #1 ETC.
EXV - ELECTRONIC EXPANSION VALVE
R1 - RELAY

FACTORY WIRING
FIELD WIRING

G R-1 WIRING DIAGRAM FOR W/I FREEZER EVAPORATOR COIL

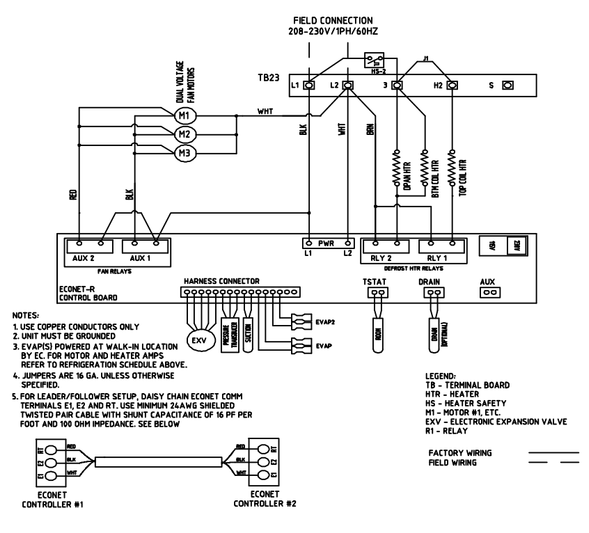

NOTES:
1. USE COPPER CONDUCTORS ONLY
2. UNIT MUST BE GROUNDED
3. EVAPRIO POWERED AT WALK-IN LOCATION BY EC. FOR MOTOR AND HEATER AMPS REFER TO REFRIGERATION SCHEDULE ABOVE.
4. JUMPERS ARE 16 GA. UNLESS OTHERWISE SPECIFIED.
5. FOR LEADER/FOLLOWER SETUP, DAISY CHAIN ECONET COMM TERMINALS ELEV AND HT. USE MINIMUM 24AWG SHIELDED TWISTED PAIR CABLE WITH SHUNT CAPACITANCE OF 16 PF PER FOOT AND 100 OHM IMPEDANCE. SEE BELOW

LEGEND
LB - TERMINAL BOARD
HTR - HEATER
HS - HEATER SAFETY
M1 - MOTOR #1 ETC.
EXV - ELECTRONIC EXPANSION VALVE
R1 - RELAY

FACTORY WIRING
FIELD WIRING

H R-1 DRAIN LINE DETAIL

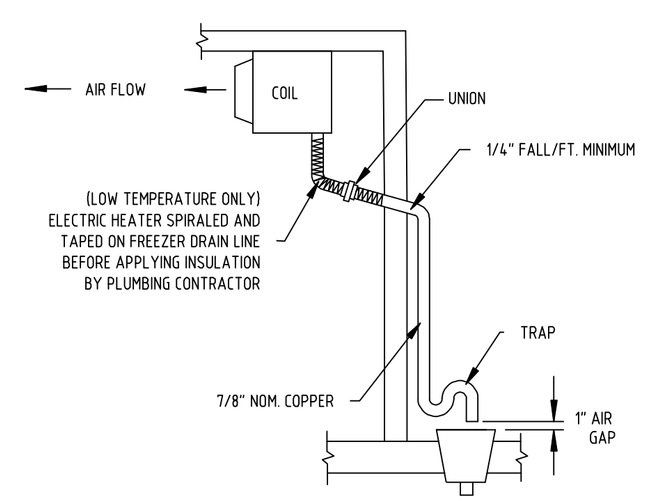

REV	Description	Date
0	Initial Release	12/16/2024

1810 Vineyard Ave.
Ontario, CA 91761
(909) 786-3656
(714) 529-8503 FAX

Project Name and Address

Coopertown ES
Reading, PA

NOT DRAWN TO SCALE

Drawing Number	Job Number 24-1253
Date 12/16/2024	Sheet Number R-1
Drawn By DG	

METRO®

SUPER ERECTA® AND SUPER ADJUSTABLE SUPER ERECTA®
Metroseal 3 Shelving

METRO® SEAL 3
with Microban® Antimicrobial Protection

Metroseal 3 is available on Super Erecta and Super Adjustable Super Erecta shelving systems. Metroseal 3 is applied using an exclusive state-of-the-art finishing and coating process that creates an attractive and corrosion-resistant finish. Metroseal 3 is enhanced with built-in Microban® antimicrobial product protection, which protects the Metroseal 3 coating from bacteria, mold, mildew and fungi that cause odors, stains and product degradation.

- **Exclusive Protection:** Metro's new proprietary epoxy coating now contains Microban® antimicrobial product protection. Microban® protects the epoxy coating from bacteria, mold, mildew and fungi that cause odors, stains and product degradation. The storage system remains cleaner between cleanings.
- **Attractive, Corrosion-Resistant Finish:** Metroseal 3 is an attractive corrosion-resistant finish that protects the shelving against corrosive conditions found in walk-in coolers.
- **Metro® Shelving Systems:** Metroseal 3 is a finish for the world's most popular shelving systems, Super Erecta and Super Adjustable Super Erecta. Both systems provide easy assembly without the use of special tools, adjustability at 1" (25mm) increments, greater air circulation and light penetration, a large selection of accessories, and the versatility to change as your storage needs change. Super Adjustable Super Erecta has the added feature of a unique patented corner release making it the easiest to adjust shelving system ever.
- **Economical:** Metroseal 3 storage shelving is an economical alternative to stainless steel, for use in environments that tend to corrode other metals.
- **12-Year Limited Warranty:** Metroseal 3 is a corrosion-resistant finish for environments which can cause other metals to corrode. Metroseal 3 has a 12-year limited warranty against rust formation.

Super Adjustable Super Erecta

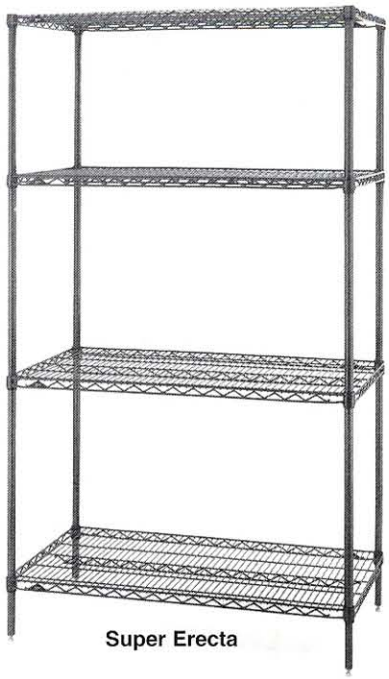

Super Erecta

NSF

*MICROBAN and the MICROBAN symbol are registered trademarks of the Microban Products Company, Huntersville, NC.

METRO®
InterMetro Industries Corporation
North Washington Street
Wilkes-Barre, PA 18705
www.metro.com

EMERSON
Storage Solutions

SUPER ERECTA® AND SUPER ADJUSTABLE SUPER ERECTA®

METROSEAL 3 SHELVING

Metroseal 3 Shelves

Cat. No. Super Adjustable	Cat. No. Super Erecta	Width (in.)	Width (mm)	Length (in.)	Length (mm)	Approx. Pkd Wt. (lbs.)	Approx. Pkd Wt. (kg)
A1424NK3	1424NK3	14	355	24	610	6	2.7
A1430NK3	1430NK3	14	355	30	760	7	3.2
A1436NK3	1436NK3	14	355	36	914	8	3.6
A1442NK3	1442NK3	14	355	42	1066	9 1/2	4.3
A1448NK3	1448NK3	14	355	48	1219	10 1/2	4.7
A1460NK3	1460NK3	14	355	60	1524	14	6.3
A1472NK3	1472NK3	14	355	72	1825	17	7.7
A1824NK3	1824NK3	18	457	24	610	7	3.2
A1830NK3	1830NK3	18	457	30	760	8	3.6
A1836NK3	1836NK3	18	457	36	914	9 1/2	4.3
A1842NK3	1842NK3	18	457	42	1066	11	5.0
A1848NK3	1848NK3	18	457	48	1219	12	5.4
A1854NK3	1854NK3	18	457	54	1370	14 1/2	6.6
A1860NK3	1860NK3	18	457	60	1524	17	7.7
A1872NK3	1872NK3	18	457	72	1825	20	9.1
A2124NK3	2124NK3	21	530	24	610	8	3.6
A2130NK3	2130NK3	21	530	30	760	9	4.1
A2136NK3	2136NK3	21	530	36	914	11	5.0
A2142NK3	2142NK3	21	530	42	1066	12	5.4
A2148NK3	2148NK3	21	530	48	1219	14	6.4
A2154NK3	2154NK3	21	530	54	1370	16	7.3
A2160NK3	2160NK3	21	530	60	1524	18	8.2
A2172NK3	2172NK3	21	530	72	1825	24	10.9
A2424NK3	2424NK3	24	610	24	610	9	4.1
A2430NK3	2430NK3	24	610	30	760	11	5.0
A2436NK3	2436NK3	24	610	36	914	13	5.9
A2442NK3	2442NK3	24	610	42	1066	15	6.8
A2448NK3	2448NK3	24	610	48	1219	16	7.3
A2454NK3	2454NK3	24	610	54	1370	19	8.6
A2460NK3	2460NK3	24	610	60	1524	21	9.5
A2472NK3	2472NK3	24	610	72	1825	26	11.8
A3036NK3		30	760	36	914	15	6.8
A3048NK3		30	760	48	1219	21	9.5
A3060NK3		30	760	60	1524	26 1/2	11.8
A3072NK3		30	760	72	1825	31	14.0
A3636NK3		36	914	36	914	18	8.2
A3648NK3		36	914	48	1219	23	10.4
A3660NK3		36	914	60	1524	29	13.1
A3672NK3		36	914	72	1825	34 1/2	15.4

SiteSelect™ Posts

Cat. No. Metroseal 3	Height* (in.)	Height* (mm)	Approx. Pkd. Wt. (lbs.)	Approx. Pkd. Wt. (kg)
13PK3	14 1/2	368	1	0.5
33PK3	34 1/2	877	2	0.9
54PK3	54 9/16	1386	3	1.4
63PK3	62 9/16	1589	3 1/2	1.6
74PK3	74 5/8	1895	4	1.8
86PK3	86 5/8	2200	5	2.3

*Height includes leveling bolt and cap.

Every Metroseal 3 shelf and post is backed by a limited 12-year warranty against surface rust formation.

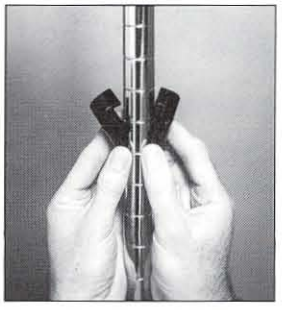

Super Erecta Split Sleeves

Super Adjustable Wedges and Corner Release System

Important: When ordering by components remember that stability decreases as the ratio of height to width increases. Units should be kept as wide and low as possible.

SiteSelect™ Posts are grooved at 1" (25mm) increments and numbered at 2" (50mm) increments. Posts are double-grooved every 8" (203mm) for easy identification.

All Metro Catalog Sheets are available on our Web Site: **www.metro.com**

InterMetro Industries Corporation
North Washington Street, Wilkes-Barre, PA 18705
Phone: 570-825-2741 • Fax: 570-825-2852
For Product Information Call: 1-800-433-2232

L02-010B
Printed in U.S.A. Rev. 11/02

Item # _____

Job _____

METRO®
STEM CASTERS

- **Metro Stem-Type Casters** are designed to fit Super Erecta Shelf® posts to form shelf carts and other mobile units.
- **Stainless Steel, Cart-Washable Casters** offer grease seals and zerk fittings. Can withstand high-pressure washings.
- **Polymer Horn Casters:** Innovative polymer stem casters offer corrosion resistance and enhanced durability. For all medium-duty applications.
- **Resilient Rubber Tread:** A molded, soft tread that provides good floor protection along with quiet operation. Non-marking.
- **Polyurethane Tread:** Long-wearing; resists abrasion. Non-marking, shock absorbing.
- **Wheel Brakes:** Foot-operated. Available on all caster models.
- **Caster Load Ratings:** From 125 lbs. to 300 lbs. (57 to 136kg) See chart.
- **Donut Bumpers:** Furnished standard on all Metro stem casters.
- **Additional Caster Types Available.**

Note: SPECIAL WHEELS — V-groove, Conductive, Steel and Phenolic — are available on request. For additional information, contact InterMetro Industries Corporation or your InterMetro representative.

Resilient Rubber

5MB Wheel Brake
Includes Donut Bumper (not shown)

5M Resilient
Includes Donut Bumper (not shown)

Stainless Steel, Cart Washable

5MDBGSA

5MDGSA

Polymer Horn Casters

5PCB

5PC

InterMetro Industries Corporation
North Washington Street
Wilkes-Barre, PA 18705
www.metro.com

Job _____

METRO®
STEM CASTERS

Dimensions
Standard Casters — Stem Type

Cat. No.	Wheel Diameter (in.)	Wheel Diameter (mm)	Face (in.)	Face (mm)	Load Rating (lbs.)	Load Rating (kg)	Type	Wheel Tread	Approx. Pkd. Wt. (lbs.)	Approx. Pkd. Wt. (kg)
4LD	4	102	1/2	12	125	56	Stem/Swivel	Resilient	1 1/2	.6
5LD	5	127	1/2	12	125	56	Stem/Swivel	Resilient	2	.9
5M	5	127	1 1/4	32	200	90	Stem/Swivel	Resilient	2 1/2	1.1
5MB	5	127	1 1/4	32	200	90	Stem/Brake	Resilient	2 3/4	1.2
5MR	5	127	1 1/4	32	200	90	Stem/Rigid	Resilient	3 1/2	1.5
5MDA	5	127	1 1/4	32	250	111	Stem/Swivel	High Modulus Donut	2 1/2	1.1
5MDBA	5	127	1 1/4	32	250	111	Stem/Brake	High Modulus Donut	2 5/8	1.17
5MDRA	5	127	1 1/4	32	250	111	Stem/Rigid	High Modulus Donut	2 3/8	1.08
5MP	5	127	1 1/4	32	300	135	Stem/Swivel	Polyurethane	2 1/8	.94
5MPB	5	127	1 1/4	32	300	135	Stem/Brake	Polyurethane	2 1/4	1
5MPR	5	127	1 1/4	32	300	135	Stem/Rigid	Polyurethane	2	.9

NOTE 1: Stem casters are shipped with donut bumper **at no additional charge.**
NOTE 2: Rigid casters are held in position by a connecting channel. When ordering rigid casters, shelf width **must be** known.
NOTE 3: Load Height for all 5M, 5MD and 5MP casters — 6 3/32" ± 1/16" (155 ± 1.5mm).
NOTE 4: Load Height for 4LD caster — 4 5/8" ± 1/16" (118 ± 1.5mm).
NOTE 5: Load Height for 5LD caster — 5 5/8" ± 1/16" (143 ± 1.5mm).
NOTE 6: Brakes are foot-operated.

Stainless Steel Cart-Washable Casters — Stem Type

Cat. No.	Wheel Diameter (in.)	Wheel Diameter (mm)	Face (in.)	Face (mm)	Load Rating (lbs.)	Load Rating (kg)	Type	Wheel Tread	Approx. Pkd. Wt. (lbs.)	Approx. Pkd. Wt. (kg)
5MDGSA	5	122	1 1/4	32	150	68	Swivel	High Modulus Donut	2 1/2	1.1
5MDBGSA	5	122	1 1/4	32	150	68	Brake	High Modulus Donut	2 5/8	1.17
5MDRGSA	5	122	1 1/4	32	150	68	Rigid	High Modulus Donut	2 3/8	1.08
5MPGSA	5	127	1 1/4	32	300	135	Swivel	Polyurethane	2 1/8	.94
5MPBGSA	5	127	1 1/4	32	300	135	Brake	Polyurethane	2 1/4	1
5MPRGSA	5	127	1 1/4	32	300	135	Rigid	Polyurethane	2	.9

NOTE 1: Stem casters are shipped with donut bumper **at no additional charge.**
NOTE 2: Rigid casters are held in position by a connecting channel. When ordering rigid casters, shelf width **must be** known.
NOTE 3: Load Height for all 5MD and 5MP casters — 6 3/32" ± 1/16" (155 ± 1.5mm).
NOTE 4: All casters are grease sealed with zerk fittings in swivel and axle.
NOTE 5: Brakes are foot-operated.
NOTE 6: "D" in model number designates donut wheel made of high-modulus rubber.

Polymer Casters — Stem Type

Cat. No.	Wheel Diameter (in.)	Wheel Diameter (mm)	Face (in.)	Face (mm)	Load Rating (lbs.)	Load Rating (kg)	Type	Wheel Tread	Approx. Pkd. Wt. (lbs.)	Approx. Pkd. Wt. (kg)
5PC	5	127	1 1/4	32	300	135	Swivel	Polyurethane	2	.9
5PCB	5	127	1 1/4	32	300	135	Brake	Polyurethane	2	.9
5PCR	5	127	1 1/4	32	300	135	Rigid	Polyurethane	2	.9

NOTE 1: Optional thread guards (blue) may be ordered by adding "-TG" to the desired model number (eg. 5PC-TG, 5PCB-TG, 5PCR-TG).
NOTE 2: Stem casters are shipped with donut bumper **at no additional charge.**
NOTE 3: Rigid casters are held in place by a connecting channel. When ordering, shelf depth **must be** provided.

Manufactured by:

InterMetro Industries Corporation
North Washington Street, Wilkes-Barre, PA 18705
Phone: 570-825-2741 • Fax: 570-825-2852
For Product Information Call: 1-800-433-2232
Visit Our Web Site: www.metro.com

L02-041
Rev. 9/00
Printed in U.S.A.

JOB:
ITEM:
QTY:

Made in the USA

REFRIGERATOR/PROOFER RACK

APPLICATION:

These racks are specifically designed for a roll-in application such as, refrigerators, freezers, and warming cabinets. These racks accommodate 13”x18”, 14”x18”, and 18”26” pans; wide-angle racks will also accommodate 12”x20” pans also.

MATERIAL:

Framework is constructed of 1”x1”x.070” wall tubing. Angle runners on the standard racks are 1 1/4”x1 5/8”x.100” wall and angle runners on the wide-angle racks are 1 1/2”x3 1/4”x.100” wall.

CASTERS:

These racks come equipped with four 5” platform type swivel casters, two with brake. Casters are inset to insure an easy in and out application.

GUARANTEE:

These racks carry a **Lifetime Guarantee** against rust and corrosion and also a **Five-Year Guarantee** against workmanship and material defects.

Model #1335

Phone:800-255-0104
Fax: 877-877-7687
www.newageindustrial.com
sales@newageindustrial.com

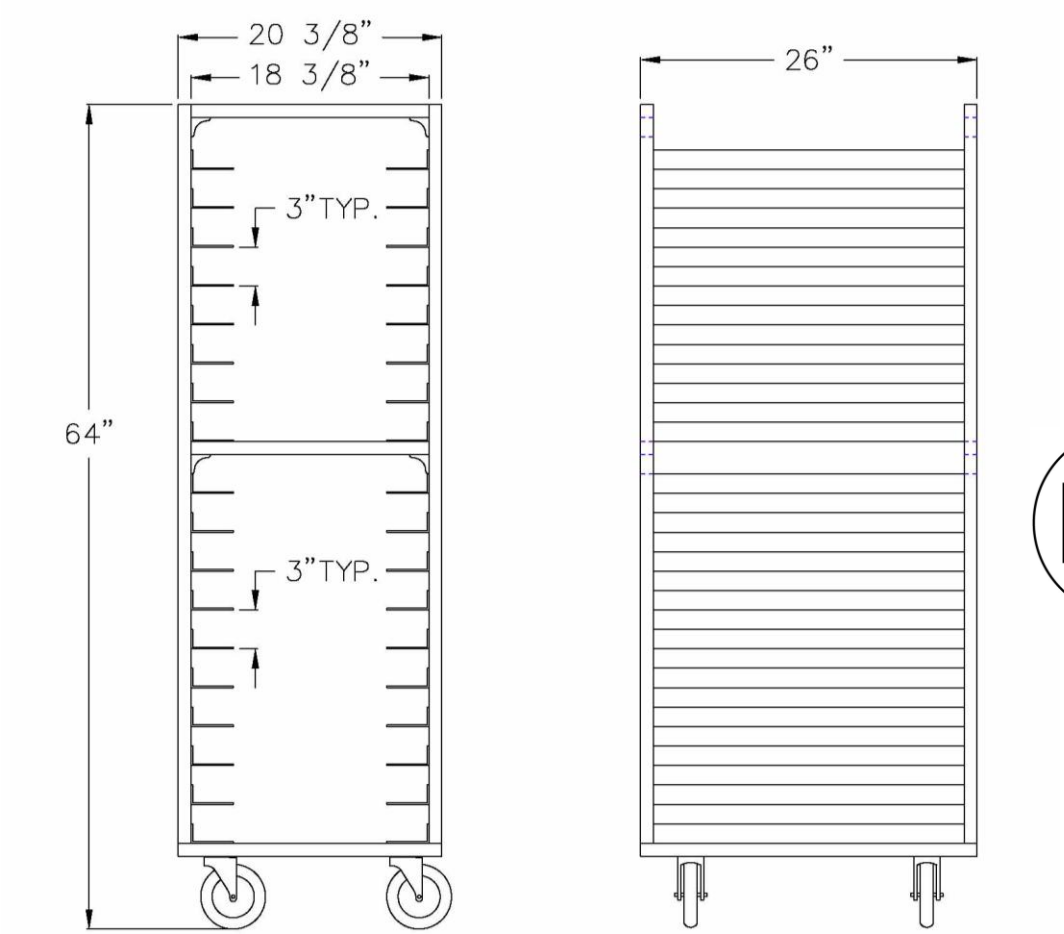

Model #1335

Model No.	Size-W	Size-H	Size-D	Runner Spacing	Pan Cap.
STANDARD REFRIGERATOR/PROOFER RACKS					
1337	20 3/8"	64"	26"	5"	11
1338	20 3/8'	64"	26"	3"	18
95433	20 11/16"	64 1/2"	26"	1 1/2"	36
WIDE-ANGLE REFRIGERATOR/PROOFER RACKS					
1335	20 3/8"	64"	26"	3"	18
1336	20 3/8"	64"	26"	5"	11

Phone:800-255-0104
Fax: 877-877-7687
www.newageindustrial.com
sales@newageindustrial.com

METRO®

SUPER ERECTA® AND SUPER ADJUSTABLE SUPER ERECTA®
Metroseal 3 Shelving

METRO® SEAL 3
with Microban® Antimicrobial Protection

Metroseal 3 is available on Super Erecta and Super Adjustable Super Erecta shelving systems. Metroseal 3 is applied using an exclusive state-of-the-art finishing and coating process that creates an attractive and corrosion-resistant finish. Metroseal 3 is enhanced with built-in Microban® antimicrobial product protection, which protects the Metroseal 3 coating from bacteria, mold, mildew and fungi that cause odors, stains and product degradation.

- **Exclusive Protection:** Metro's new proprietary epoxy coating now contains Microban® antimicrobial product protection. Microban® protects the epoxy coating from bacteria, mold, mildew and fungi that cause odors, stains and product degradation. The storage system remains cleaner between cleanings.
- **Attractive, Corrosion-Resistant Finish:** Metroseal 3 is an attractive corrosion-resistant finish that protects the shelving against corrosive conditions found in walk-in coolers.
- **Metro® Shelving Systems:** Metroseal 3 is a finish for the world's most popular shelving systems, Super Erecta and Super Adjustable Super Erecta. Both systems provide easy assembly without the use of special tools, adjustability at 1" (25mm) increments, greater air circulation and light penetration, a large selection of accessories, and the versatility to change as your storage needs change. Super Adjustable Super Erecta has the added feature of a unique patented corner release making it the easiest to adjust shelving system ever.
- **Economical:** Metroseal 3 storage shelving is an economical alternative to stainless steel, for use in environments that tend to corrode other metals.
- **12-Year Limited Warranty:** Metroseal 3 is a corrosion-resistant finish for environments which can cause other metals to corrode. Metroseal 3 has a 12-year limited warranty against rust formation.

Super Adjustable Super Erecta

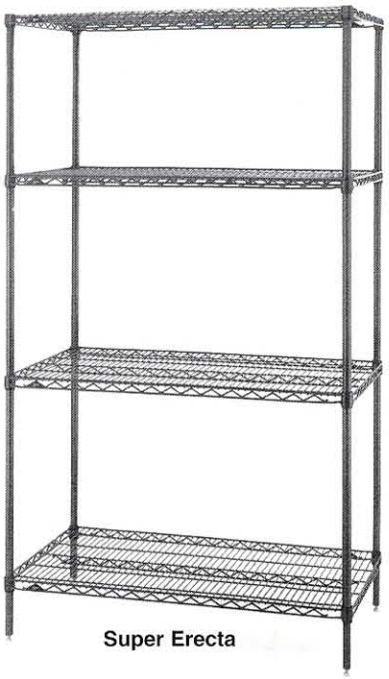

Super Erecta

NSF

*MICROBAN and the MICROBAN symbol are registered trademarks of the Microban Products Company, Huntersville, NC.

METRO®
InterMetro Industries Corporation
North Washington Street
Wilkes-Barre, PA 18705
www.metro.com

EMERSON
Storage Solutions

SUPER ERECTA® AND SUPER ADJUSTABLE SUPER ERECTA®

METROSEAL 3 SHELVING

Metroseal 3 Shelves

Cat. No. Super Adjustable	Cat. No. Super Erecta	Width (in.)	Width (mm)	Length (in.)	Length (mm)	Approx. Pkd Wt. (lbs.)	Approx. Pkd Wt. (kg)
A1424NK3	1424NK3	14	355	24	610	6	2.7
A1430NK3	1430NK3	14	355	30	760	7	3.2
A1436NK3	1436NK3	14	355	36	914	8	3.6
A1442NK3	1442NK3	14	355	42	1066	9 1/2	4.3
A1448NK3	1448NK3	14	355	48	1219	10 1/2	4.7
A1460NK3	1460NK3	14	355	60	1524	14	6.3
A1472NK3	1472NK3	14	355	72	1825	17	7.7
A1824NK3	1824NK3	18	457	24	610	7	3.2
A1830NK3	1830NK3	18	457	30	760	8	3.6
A1836NK3	1836NK3	18	457	36	914	9 1/2	4.3
A1842NK3	1842NK3	18	457	42	1066	11	5.0
A1848NK3	1848NK3	18	457	48	1219	12	5.4
A1854NK3	1854NK3	18	457	54	1370	14 1/2	6.6
A1860NK3	1860NK3	18	457	60	1524	17	7.7
A1872NK3	1872NK3	18	457	72	1825	20	9.1
A2124NK3	2124NK3	21	530	24	610	8	3.6
A2130NK3	2130NK3	21	530	30	760	9	4.1
A2136NK3	2136NK3	21	530	36	914	11	5.0
A2142NK3	2142NK3	21	530	42	1066	12	5.4
A2148NK3	2148NK3	21	530	48	1219	14	6.4
A2154NK3	2154NK3	21	530	54	1370	16	7.3
A2160NK3	2160NK3	21	530	60	1524	18	8.2
A2172NK3	2172NK3	21	530	72	1825	24	10.9
A2424NK3	2424NK3	24	610	24	610	9	4.1
A2430NK3	2430NK3	24	610	30	760	11	5.0
A2436NK3	2436NK3	24	610	36	914	13	5.9
A2442NK3	2442NK3	24	610	42	1066	15	6.8
A2448NK3	2448NK3	24	610	48	1219	16	7.3
A2454NK3	2454NK3	24	610	54	1370	19	8.6
A2460NK3	2460NK3	24	610	60	1524	21	9.5
A2472NK3	2472NK3	24	610	72	1825	26	11.8
A3036NK3		30	760	36	914	15	6.8
A3048NK3		30	760	48	1219	21	9.5
A3060NK3		30	760	60	1524	26 1/2	11.8
A3072NK3		30	760	72	1825	31	14.0
A3636NK3		36	914	36	914	18	8.2
A3648NK3		36	914	48	1219	23	10.4
A3660NK3		36	914	60	1524	29	13.1
A3672NK3		36	914	72	1825	34 1/2	15.4

SiteSelect™ Posts

Cat. No. Metroseal 3	Height* (in.)	Height* (mm)	Approx. Pkd. Wt. (lbs.)	Approx. Pkd. Wt. (kg)
13PK3	14 1/2	368	1	0.5
33PK3	34 1/2	877	2	0.9
54PK3	54 9/16	1386	3	1.4
63PK3	62 9/16	1589	3 1/2	1.6
74PK3	74 5/8	1895	4	1.8
86PK3	86 5/8	2200	5	2.3

*Height includes leveling bolt and cap.

Every Metroseal 3 shelf and post is backed by a limited 12-year warranty against surface rust formation.

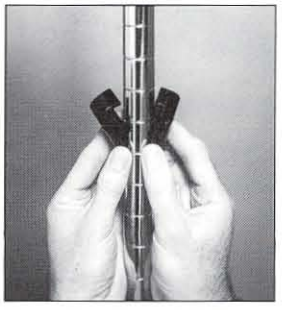

Super Erecta Split Sleeves

Super Adjustable Wedges and Corner Release System

Important: When ordering by components remember that stability decreases as the ratio of height to width increases. Units should be kept as wide and low as possible.

SiteSelect™ Posts are grooved at 1" (25mm) increments and numbered at 2" (50mm) increments. Posts are double-grooved every 8" (203mm) for easy identification.

All Metro Catalog Sheets are available on our Web Site: **www.metro.com**

InterMetro Industries Corporation
North Washington Street, Wilkes-Barre, PA 18705
Phone: 570-825-2741 • Fax: 570-825-2852
For Product Information Call: 1-800-433-2232

L02-010B
Printed in U.S.A. Rev. 11/02

Item # _____

Job _____

METRO®
STEM CASTERS

- **Metro Stem-Type Casters** are designed to fit Super Erecta Shelf® posts to form shelf carts and other mobile units.
- **Stainless Steel, Cart-Washable Casters** offer grease seals and zerk fittings. Can withstand high-pressure washings.
- **Polymer Horn Casters:** Innovative polymer stem casters offer corrosion resistance and enhanced durability. For all medium-duty applications.
- **Resilient Rubber Tread:** A molded, soft tread that provides good floor protection along with quiet operation. Non-marking.
- **Polyurethane Tread:** Long-wearing; resists abrasion. Non-marking, shock absorbing.
- **Wheel Brakes:** Foot-operated. Available on all caster models.
- **Caster Load Ratings:** From 125 lbs. to 300 lbs. (57 to 136kg) See chart.
- **Donut Bumpers:** Furnished standard on all Metro stem casters.
- **Additional Caster Types Available.**

Note: SPECIAL WHEELS — V-groove, Conductive, Steel and Phenolic — are available on request. For additional information, contact InterMetro Industries Corporation or your InterMetro representative.

Resilient Rubber

5MB Wheel Brake
Includes Donut Bumper (not shown)

5M Resilient
Includes Donut Bumper (not shown)

Stainless Steel, Cart Washable

5MDBGSA

5MDGSA

Polymer Horn Casters

5PCB

5PC

InterMetro Industries Corporation
North Washington Street
Wilkes-Barre, PA 18705
www.metro.com

Job _____

METRO®
STEM CASTERS

Dimensions
Standard Casters — Stem Type

Cat. No.	Wheel Diameter (in.)	Wheel Diameter (mm)	Face (in.)	Face (mm)	Load Rating (lbs.)	Load Rating (kg)	Type	Wheel Tread	Approx. Pkd. Wt. (lbs.)	Approx. Pkd. Wt. (kg)
4LD	4	102	1/2	12	125	56	Stem/Swivel	Resilient	1 1/2	.6
5LD	5	127	1/2	12	125	56	Stem/Swivel	Resilient	2	.9
5M	5	127	1 1/4	32	200	90	Stem/Swivel	Resilient	2 1/2	1.1
5MB	5	127	1 1/4	32	200	90	Stem/Brake	Resilient	2 3/4	1.2
5MR	5	127	1 1/4	32	200	90	Stem/Rigid	Resilient	3 1/2	1.5
5MDA	5	127	1 1/4	32	250	111	Stem/Swivel	High Modulus Donut	2 1/2	1.1
5MDBA	5	127	1 1/4	32	250	111	Stem/Brake	High Modulus Donut	2 5/8	1.17
5MDRA	5	127	1 1/4	32	250	111	Stem/Rigid	High Modulus Donut	2 3/8	1.08
5MP	5	127	1 1/4	32	300	135	Stem/Swivel	Polyurethane	2 1/8	.94
5MPB	5	127	1 1/4	32	300	135	Stem/Brake	Polyurethane	2 1/4	1
5MPR	5	127	1 1/4	32	300	135	Stem/Rigid	Polyurethane	2	.9

NOTE 1: Stem casters are shipped with donut bumper **at no additional charge.**
NOTE 2: Rigid casters are held in position by a connecting channel. When ordering rigid casters, shelf width **must be** known.
NOTE 3: Load Height for all 5M, 5MD and 5MP casters — 6 3/32" ± 1/16" (155 ± 1.5mm).
NOTE 4: Load Height for 4LD caster — 4 5/8" ± 1/16" (118 ± 1.5mm).
NOTE 5: Load Height for 5LD caster — 5 5/8" ± 1/16" (143 ± 1.5mm).
NOTE 6: Brakes are foot-operated.

Stainless Steel Cart-Washable Casters — Stem Type

Cat. No.	Wheel Diameter (in.)	Wheel Diameter (mm)	Face (in.)	Face (mm)	Load Rating (lbs.)	Load Rating (kg)	Type	Wheel Tread	Approx. Pkd. Wt. (lbs.)	Approx. Pkd. Wt. (kg)
5MDGSA	5	122	1 1/4	32	150	68	Swivel	High Modulus Donut	2 1/2	1.1
5MDBGSA	5	122	1 1/4	32	150	68	Brake	High Modulus Donut	2 5/8	1.17
5MDRGSA	5	122	1 1/4	32	150	68	Rigid	High Modulus Donut	2 3/8	1.08
5MPGSA	5	127	1 1/4	32	300	135	Swivel	Polyurethane	2 1/8	.94
5MPBGSA	5	127	1 1/4	32	300	135	Brake	Polyurethane	2 1/4	1
5MPRGSA	5	127	1 1/4	32	300	135	Rigid	Polyurethane	2	.9

NOTE 1: Stem casters are shipped with donut bumper **at no additional charge.**
NOTE 2: Rigid casters are held in position by a connecting channel. When ordering rigid casters, shelf width **must be** known.
NOTE 3: Load Height for all 5MD and 5MP casters — 6 3/32" ± 1/16" (155 ± 1.5mm).
NOTE 4: All casters are grease sealed with zerk fittings in swivel and axle.
NOTE 5: Brakes are foot-operated.
NOTE 6: "D" in model number designates donut wheel made of high-modulus rubber.

Polymer Casters — Stem Type

Cat. No.	Wheel Diameter (in.)	Wheel Diameter (mm)	Face (in.)	Face (mm)	Load Rating (lbs.)	Load Rating (kg)	Type	Wheel Tread	Approx. Pkd. Wt. (lbs.)	Approx. Pkd. Wt. (kg)
5PC	5	127	1 1/4	32	300	135	Swivel	Polyurethane	2	.9
5PCB	5	127	1 1/4	32	300	135	Brake	Polyurethane	2	.9
5PCR	5	127	1 1/4	32	300	135	Rigid	Polyurethane	2	.9

NOTE 1: Optional thread guards (blue) may be ordered by adding "-TG" to the desired model number (eg. 5PC-TG, 5PCB-TG, 5PCR-TG).
NOTE 2: Stem casters are shipped with donut bumper **at no additional charge.**
NOTE 3: Rigid casters are held in place by a connecting channel. When ordering, shelf depth **must be** provided.

Manufactured by:

InterMetro Industries Corporation
North Washington Street, Wilkes-Barre, PA 18705
Phone: 570-825-2741 • Fax: 570-825-2852
For Product Information Call: 1-800-433-2232
Visit Our Web Site: www.metro.com

L02-041
Rev. 9/00
Printed in U.S.A.

DUNNAGE RACKS

STANDARD DUNNAGE RACKS

KELMAX by SPG

NSF

ITEM #_____MODEL #_____QTY:___
PROJECT: _____
OPTIONS:☐YES _____ ☐NO _____

Standard Features & Benefits

- Great for coolers and freezers
- Provides safer storage and reduces product damage
- Square tubular dunnage racks are an economical way to hold medium to heavy boxes
- Meets NSF specification for use in walk-in coolers and freezers
- Units available in 8” and 12” heights
- Lifetime guarantee against rust
- Freight class 70

Standard Tubular Dunnage Racks

12" Leg (305 mm) Model No.	8" Leg (203 mm) Model No.	L x D (in.)	L x D (mm.)	Capacity (lbs.)	Weight (lbs.)	Weight (kg.)
24" Wide						
4H1700	4H1703	20 x 24	508 x 610	2100	7	3
4H1705	4H1706	24 x 24	610 x 610	2100	7	3
36" Wide						
4H1751	4H1752	20 x 36	508 x 914	2100	8	4
4H1755	4H1759	24 x 36	610 x 914	2100	9	4
48" Wide						
4H1809	4H1810	20 x 48	508 x 1219	1800	10	5
4H1814	4H1818	24 x 48	610 x 1219	1800	12	5
60" Wide						
4H1852	4H1853	20 x 60	508 x 1524	1500	13	6
4H1855	4H1857	24 x 60	610 x 1524	1500	15	7

DUNNAGE RACKS

SPECIFICATIONS

Heavy Wall Tubular Dunnage Racks

12" Leg (305 mm) Model No.	8" Leg (203 mm) Model No.	L x D (in.)	L x D (mm.)	Capacity (lbs.)	Weight (lbs.)	Weight (kg.)
36" Wide						
4H2123	4H2124	20 x 36	508 x 914	3000	9	4
4H2125	4H2126	24 x 36	610 x 914	3000	11	5
48" Wide						
4H2142	4H2144	20 x 48	508 x 1219	2500	11	5
4H2959	4H2148	24 x 48	610 x 1219	2500	14	6
60" Wide						
4H2163	4H2164	20 x 60	508 x 1524	2000	13	6
4H2166	4H2168	24 x 60	610 x 1524	2000	16	7

CONSTRUCTION:

Constructed of Heavy-Duty type 6063 aluminum

TOP:

Constructed of square 1 1/2" x 1 1/2" aluminum tube welded horizontally on 4 1/2" centers

LEGS:

Legs are 1 1/2" x 1 1/2" mitered with plastic feet

Channel Style Dunnage Racks

12" Leg (305 mm) Model No.	8" Leg (203 mm) Model No.	L x D (in.)	L x D (mm.)	Capacity (lbs.)	Weight (lbs.)	Weight (kg.)
24" Wide						
4H1904	4H1906	20 x 24	508 x 610	3000	9	4
4H1912	4H1914	24 x 24	610 x 610	3000	9	4
36" Wide						
4H1948	4H1949	20 x 36	508 x 914	3000	10	5
4H1957	4H1956	24 x 36	610 x 914	3000	11	5
48" Wide						
4H2000	4H2001	20 x 48	508 x 1219	2500	12	5
4H2008	4H2011	24 x 48	610 x 1219	2500	15	7
60" Wide						
4H2045	4H2046	20 x 60	508 x 1524	2200	15	7
4H2050	4H2054	24 x 60	610 x 1524	2200	18	8

Heavy-Duty Mobile Dunnage Racks

Model No.	L x D (in.)	L x D (mm.)	Weight (lbs.)	Weight (kg.)
4H2866	24 x 24	610 x 610	29	13
4H1960	24 x 36	610 x 914	36	16
4H2014	24 x 48	610 x 1219	45	20

Mobile Unit Options

Model No.	Description
/H20	20" Handle
/H24	24" Handle

To select an option, please contact factory for part number.

AMCO • Freestyle • ISS • Kelmax • LPI • Universal Stainless • Gillis-Jarke

SPG International, LLC
11230 Harland Drive NE
Covington, GA 30014
877-503-4SPG (4774)

www.spgusa.com

The best names in the business
all have one thing in common.

EXPECT MORE
SPG
STORAGE PRODUCTS GROUP

METRO®

SUPER ERECTA® AND SUPER ADJUSTABLE SUPER ERECTA®
Metroseal 3 Shelving

METRO® SEAL 3
with Microban® Antimicrobial Protection

Metroseal 3 is available on Super Erecta and Super Adjustable Super Erecta shelving systems. Metroseal 3 is applied using an exclusive state-of-the-art finishing and coating process that creates an attractive and corrosion-resistant finish. Metroseal 3 is enhanced with built-in Microban® antimicrobial product protection, which protects the Metroseal 3 coating from bacteria, mold, mildew and fungi that cause odors, stains and product degradation.

- **Exclusive Protection:** Metro's new proprietary epoxy coating now contains Microban® antimicrobial product protection. Microban® protects the epoxy coating from bacteria, mold, mildew and fungi that cause odors, stains and product degradation. The storage system remains cleaner between cleanings.
- **Attractive, Corrosion-Resistant Finish:** Metroseal 3 is an attractive corrosion-resistant finish that protects the shelving against corrosive conditions found in walk-in coolers.
- **Metro® Shelving Systems:** Metroseal 3 is a finish for the world's most popular shelving systems, Super Erecta and Super Adjustable Super Erecta. Both systems provide easy assembly without the use of special tools, adjustability at 1" (25mm) increments, greater air circulation and light penetration, a large selection of accessories, and the versatility to change as your storage needs change. Super Adjustable Super Erecta has the added feature of a unique patented corner release making it the easiest to adjust shelving system ever.
- **Economical:** Metroseal 3 storage shelving is an economical alternative to stainless steel, for use in environments that tend to corrode other metals.
- **12-Year Limited Warranty:** Metroseal 3 is a corrosion-resistant finish for environments which can cause other metals to corrode. Metroseal 3 has a 12-year limited warranty against rust formation.

Super Adjustable Super Erecta

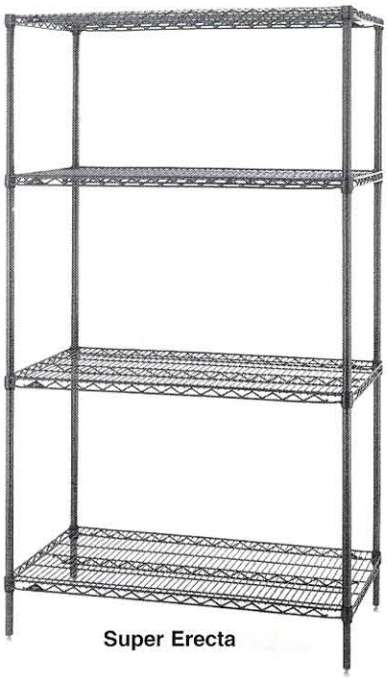

Super Erecta

NSF

*MICROBAN and the MICROBAN symbol are registered trademarks of the Microban Products Company, Huntersville, NC.

METRO®
InterMetro Industries Corporation
North Washington Street
Wilkes-Barre, PA 18705
www.metro.com

EMERSON.
Storage Solutions

SUPER ERECTA® AND SUPER ADJUSTABLE SUPER ERECTA®

METROSEAL 3 SHELVING

Metroseal 3 Shelves

Cat. No. Super Adjustable	Cat. No. Super Erecta	Width (in.)	Width (mm)	Length (in.)	Length (mm)	Approx. Pkd Wt. (lbs.)	Approx. Pkd Wt. (kg)
A1424NK3	1424NK3	14	355	24	610	6	2.7
A1430NK3	1430NK3	14	355	30	760	7	3.2
A1436NK3	1436NK3	14	355	36	914	8	3.6
A1442NK3	1442NK3	14	355	42	1066	9 1/2	4.3
A1448NK3	1448NK3	14	355	48	1219	10 1/2	4.7
A1460NK3	1460NK3	14	355	60	1524	14	6.3
A1472NK3	1472NK3	14	355	72	1825	17	7.7
A1824NK3	1824NK3	18	457	24	610	7	3.2
A1830NK3	1830NK3	18	457	30	760	8	3.6
A1836NK3	1836NK3	18	457	36	914	9 1/2	4.3
A1842NK3	1842NK3	18	457	42	1066	11	5.0
A1848NK3	1848NK3	18	457	48	1219	12	5.4
A1854NK3	1854NK3	18	457	54	1370	14 1/2	6.6
A1860NK3	1860NK3	18	457	60	1524	17	7.7
A1872NK3	1872NK3	18	457	72	1825	20	9.1
A2124NK3	2124NK3	21	530	24	610	8	3.6
A2130NK3	2130NK3	21	530	30	760	9	4.1
A2136NK3	2136NK3	21	530	36	914	11	5.0
A2142NK3	2142NK3	21	530	42	1066	12	5.4
A2148NK3	2148NK3	21	530	48	1219	14	6.4
A2154NK3	2154NK3	21	530	54	1370	16	7.3
A2160NK3	2160NK3	21	530	60	1524	18	8.2
A2172NK3	2172NK3	21	530	72	1825	24	10.9
A2424NK3	2424NK3	24	610	24	610	9	4.1
A2430NK3	2430NK3	24	610	30	760	11	5.0
A2436NK3	2436NK3	24	610	36	914	13	5.9
A2442NK3	2442NK3	24	610	42	1066	15	6.8
A2448NK3	2448NK3	24	610	48	1219	16	7.3
A2454NK3	2454NK3	24	610	54	1370	19	8.6
A2460NK3	2460NK3	24	610	60	1524	21	9.5
A2472NK3	2472NK3	24	610	72	1825	26	11.8
A3036NK3		30	760	36	914	15	6.8
A3048NK3		30	760	48	1219	21	9.5
A3060NK3		30	760	60	1524	26 1/2	11.8
A3072NK3		30	760	72	1825	31	14.0
A3636NK3		36	914	36	914	18	8.2
A3648NK3		36	914	48	1219	23	10.4
A3660NK3		36	914	60	1524	29	13.1
A3672NK3		36	914	72	1825	34 1/2	15.4

SiteSelect™ Posts

Cat. No. Metroseal 3	Height* (in.)	Height* (mm)	Approx. Pkd. Wt. (lbs.)	Approx. Pkd. Wt. (kg)
13PK3	14 1/2	368	1	0.5
33PK3	34 1/2	877	2	0.9
54PK3	54 9/16	1386	3	1.4
63PK3	62 9/16	1589	3 1/2	1.6
74PK3	74 5/8	1895	4	1.8
86PK3	86 5/8	2200	5	2.3

*Height includes leveling bolt and cap.

Every Metroseal 3 shelf and post is backed by a limited 12-year warranty against surface rust formation.

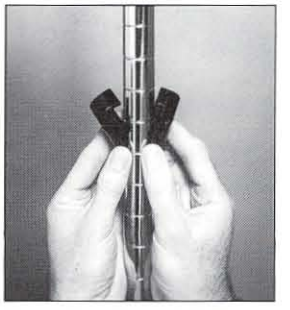

Super Erecta Split Sleeves

Super Adjustable Wedges and Corner Release System

Important: When ordering by components remember that stability decreases as the ratio of height to width increases. Units should be kept as wide and low as possible.

SiteSelect™ Posts are grooved at 1" (25mm) increments and numbered at 2" (50mm) increments. Posts are double-grooved every 8" (203mm) for easy identification.

All Metro Catalog Sheets are available on our Web Site: **www.metro.com**

InterMetro Industries Corporation
North Washington Street, Wilkes-Barre, PA 18705
Phone: 570-825-2741 • Fax: 570-825-2852
For Product Information Call: 1-800-433-2232

L02-010B
Printed in U.S.A. Rev. 11/02

Item # _____

Job _____

METRO®
STEM CASTERS

- **Metro Stem-Type Casters** are designed to fit Super Erecta Shelf® posts to form shelf carts and other mobile units.
- **Stainless Steel, Cart-Washable Casters** offer grease seals and zerk fittings. Can withstand high-pressure washings.
- **Polymer Horn Casters:** Innovative polymer stem casters offer corrosion resistance and enhanced durability. For all medium-duty applications.
- **Resilient Rubber Tread:** A molded, soft tread that provides good floor protection along with quiet operation. Non-marking.
- **Polyurethane Tread:** Long-wearing; resists abrasion. Non-marking, shock absorbing.
- **Wheel Brakes:** Foot-operated. Available on all caster models.
- **Caster Load Ratings:** From 125 lbs. to 300 lbs. (57 to 136kg) See chart.
- **Donut Bumpers:** Furnished standard on all Metro stem casters.
- **Additional Caster Types Available.**

Note: SPECIAL WHEELS — V-groove, Conductive, Steel and Phenolic — are available on request. For additional information, contact InterMetro Industries Corporation or your InterMetro representative.

Resilient Rubber

5MB Wheel Brake
Includes Donut Bumper (not shown)

5M Resilient
Includes Donut Bumper (not shown)

Stainless Steel, Cart Washable

5MDBGSA

5MDGSA

Polymer Horn Casters

5PCB

5PC

InterMetro Industries Corporation
North Washington Street
Wilkes-Barre, PA 18705
www.metro.com

Job _____

METRO®
STEM CASTERS

Dimensions
Standard Casters — Stem Type

Cat. No.	Wheel Diameter (in.)	Wheel Diameter (mm)	Face (in.)	Face (mm)	Load Rating (lbs.)	Load Rating (kg)	Type	Wheel Tread	Approx. Pkd. Wt. (lbs.)	Approx. Pkd. Wt. (kg)
4LD	4	102	1/2	12	125	56	Stem/Swivel	Resilient	1 1/2	.6
5LD	5	127	1/2	12	125	56	Stem/Swivel	Resilient	2	.9
5M	5	127	1 1/4	32	200	90	Stem/Swivel	Resilient	2 1/2	1.1
5MB	5	127	1 1/4	32	200	90	Stem/Brake	Resilient	2 3/4	1.2
5MR	5	127	1 1/4	32	200	90	Stem/Rigid	Resilient	3 1/2	1.5
5MDA	5	127	1 1/4	32	250	111	Stem/Swivel	High Modulus Donut	2 1/2	1.1
5MDBA	5	127	1 1/4	32	250	111	Stem/Brake	High Modulus Donut	2 5/8	1.17
5MDRA	5	127	1 1/4	32	250	111	Stem/Rigid	High Modulus Donut	2 3/8	1.08
5MP	5	127	1 1/4	32	300	135	Stem/Swivel	Polyurethane	2 1/8	.94
5MPB	5	127	1 1/4	32	300	135	Stem/Brake	Polyurethane	2 1/4	1
5MPR	5	127	1 1/4	32	300	135	Stem/Rigid	Polyurethane	2	.9

NOTE 1: Stem casters are shipped with donut bumper **at no additional charge.**
NOTE 2: Rigid casters are held in position by a connecting channel. When ordering rigid casters, shelf width **must be** known.
NOTE 3: Load Height for all 5M, 5MD and 5MP casters — 6 3/32" ± 1/16" (155 ± 1.5mm).
NOTE 4: Load Height for 4LD caster — 4 5/8" ± 1/16" (118 ± 1.5mm).
NOTE 5: Load Height for 5LD caster — 5 5/8" ± 1/16" (143 ± 1.5mm).
NOTE 6: Brakes are foot-operated.

Stainless Steel Cart-Washable Casters — Stem Type

Cat. No.	Wheel Diameter (in.)	Wheel Diameter (mm)	Face (in.)	Face (mm)	Load Rating (lbs.)	Load Rating (kg)	Type	Wheel Tread	Approx. Pkd. Wt. (lbs.)	Approx. Pkd. Wt. (kg)
5MDGSA	5	122	1 1/4	32	150	68	Swivel	High Modulus Donut	2 1/2	1.1
5MDBGSA	5	122	1 1/4	32	150	68	Brake	High Modulus Donut	2 5/8	1.17
5MDRGSA	5	122	1 1/4	32	150	68	Rigid	High Modulus Donut	2 3/8	1.08
5MPGSA	5	127	1 1/4	32	300	135	Swivel	Polyurethane	2 1/8	.94
5MPBGSA	5	127	1 1/4	32	300	135	Brake	Polyurethane	2 1/4	1
5MPRGSA	5	127	1 1/4	32	300	135	Rigid	Polyurethane	2	.9

NOTE 1: Stem casters are shipped with donut bumper **at no additional charge.**
NOTE 2: Rigid casters are held in position by a connecting channel. When ordering rigid casters, shelf width **must be** known.
NOTE 3: Load Height for all 5MD and 5MP casters — 6 3/32" ± 1/16" (155 ± 1.5mm).
NOTE 4: All casters are grease sealed with zerk fittings in swivel and axle.
NOTE 5: Brakes are foot-operated.
NOTE 6: "D" in model number designates donut wheel made of high-modulus rubber.

Polymer Casters — Stem Type

Cat. No.	Wheel Diameter (in.)	Wheel Diameter (mm)	Face (in.)	Face (mm)	Load Rating (lbs.)	Load Rating (kg)	Type	Wheel Tread	Approx. Pkd. Wt. (lbs.)	Approx. Pkd. Wt. (kg)
5PC	5	127	1 1/4	32	300	135	Swivel	Polyurethane	2	.9
5PCB	5	127	1 1/4	32	300	135	Brake	Polyurethane	2	.9
5PCR	5	127	1 1/4	32	300	135	Rigid	Polyurethane	2	.9

NOTE 1: Optional thread guards (blue) may be ordered by adding "-TG" to the desired model number (eg. 5PC-TG, 5PCB-TG, 5PCR-TG).
NOTE 2: Stem casters are shipped with donut bumper **at no additional charge.**
NOTE 3: Rigid casters are held in place by a connecting channel. When ordering, shelf depth **must be** provided.

Manufactured by:

InterMetro Industries Corporation
North Washington Street, Wilkes-Barre, PA 18705
Phone: 570-825-2741 • Fax: 570-825-2852
For Product Information Call: 1-800-433-2232
Visit Our Web Site: www.metro.com

L02-041
Rev. 9/00
Printed in U.S.A.

CHANNEL MANUFACTURING, INC.

Item No. _____

Quantity_____

Job Name_____

Spec No. _____

CAN RACKS

FIRST IN/FIRST OUT FRONT LOADING

ALUMINUM CONSTRUCTION

Custom Sizes Available

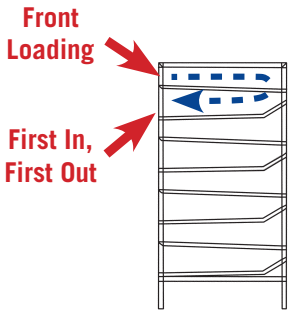

Model	Capacity 156 – #10 Cans	H	W	D	Weight
CSR-156	Stationary	82"	28⅝"	42¼"	165
CSR-156M	Mobile	88"	28⅝"	42¼"	185

Options:

❑ /5B HD Caster Brakes (2)

APPLICATIONS:
Front loading, first in, first out (FIFO) can rack for can holding, storing and organization. Ideal for schools, hospitals, etc. Inclined angle provides easy access for can selection, rotation and inventory control. Holds 156 #10 cans.

CONSTRUCTION:
Heavy duty, high tensile extruded aluminum. Type 6063-T5 alloy. Lifetime guarantee against rust and corrosion. Shipped assembled for immediate use.

CAN SLIDES: Slides are 1" x 2" extruded aluminum angle heli-arc welded to frame with the front edge rolled up to prevent cans from falling.

FRAME AND CROSS SUPPORTS:
Vertical and horizontal frame sections are 1" extruded aluminum tubing.

CASTERS: **CSR-156M:** Standard 5" full swivel non-marking casters. Casters are securely bolted to frame to facilitate replacements.

MADE IN THE USA NSF

Notes

55 Channel Drive • Port Washington, NY11050-2216
8891 NW 102nd Street • Medley, FL 33178
Tel: 516-944-6271 • Fax: 516-944-0625
Toll Free: 866-712-7283
www.channelmfg.com • Email: sales@channelmfg.com

ADVANCE TABCO
SMART FABRICATION™

STAINLESS STEEL

HAND SINKS

A.D.A COMPLIANT LAVATORIES

Conforms To NSF 61/9 Lead Free Requirements

Item #:_____ **Qty #:**_____

Model #:_____

Project #:_____

7-PS-25

7-PS-75

7-PS-751

7-PS-26

FEATURES:

One piece **Deep Drawn** sink bowl design.

Sink bowl is 16" x 14" x 5".

All sink bowls have a large liberal radii with a minimum dimension of 2" and are rectangular in design for increased capacity.

1 1/2" stainless steel drain with crumb basket.

Additional Specific Features:

7-PS-25 6" Extended deck mounted gooseneck faucet with wrist handles & deck mounted liquid soap dispenser.
7-PS-26 includes a "Hands Free" AC/DC operated gooseneck faucet & deck mounted, liquid soap dispenser.
7-PS-75 Sink Only with three 1-3/8"dia. holes punched. Faucet & Soap Dispenser not included.
7-PS-751 Sink Only with single Hole punched. Faucet & Soap Dispenser not included.

CONSTRUCTION:

All TIG welded.
Welded areas blended to match adjacent surfaces and to a satin finish.
Die formed Countertop Edge with a 3/8" No-Drip offset.
Bowl made from One sheet of stainless steel - No Seams.

MATERIAL:

Heavy gauge type 304 series stainless steel.
Wall mounting bracket is Galvanized and of offset design.
All fittings are brass / chrome plated unless otherwise indicated.

MECHANICAL:

Faucet supply is 1/2" IPS male thread hot and cold.
Faucet Flow Rate: 1.0 GPM/3.8 LPM aerator. 60 PSI.

TAPERED BOWL DESIGNS AVAILABLE

Click Here For Spec Sheet!

7-PS-41

7-PS-77E

OPTIONS & ACCESSORIES

Electronic Soap Dispenser
Wall Mounted.
A/C or Battery Powered.
Includes Bracket & Hardware.
Uses Liquid Soap.
7-PS-12E

8" O.C.

Heavy Duty 5-1/2" Gooseneck Faucet
K-132

Drinking Bubbler For 7-PS-25, 7-PS-26 & 7-PS-75
K-47

8" O.C.

Heavy Duty 9" Swing Spout Faucet
K-133

Strainer Plate for K-63 2" Drain
K-411

⚠ WARNING:

Equipment that includes a faucet may expose you to chemicals, including lead, that are known to the State of California to cause cancer or birth defects or other reproductive harm. For more Info.,visit www.p65warnings.ca.gov.

ADVANCE TABCO
SMART FABRICATION™
www.advancetabco.com

Customer Service Available To Assist You 1-800-645-3166 8:30 am - 7:00 pm E.S.T.

For Orders & Customer Service:
Email: customer@advancetabco.com or Fax: 631-242-6900

For Smart Fabrication™ Quotes:
Email: smartfab@advancetabco.com or Fax: 631-586-2933

DIMENSIONS and SPECIFICATIONS

TOL Overall: ± .500” Interior: ± .250” **FITTINGS SUPPLIED AS SHOWN** **ALL DIMENSIONS ARE TYPICAL**

7-PS-25

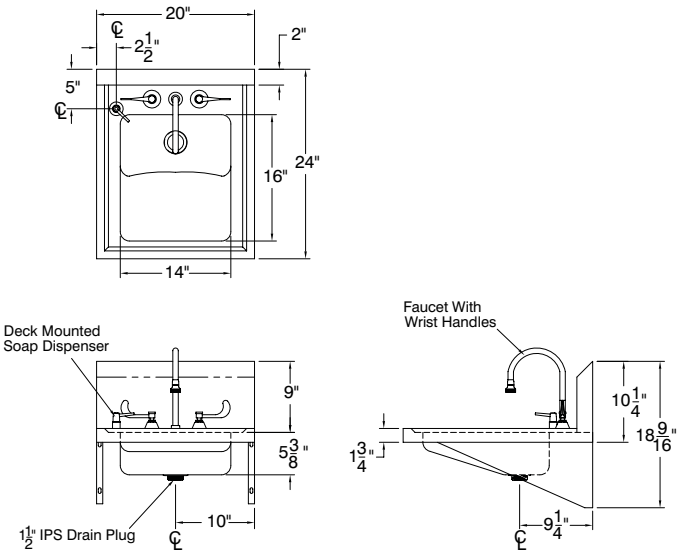

25 lbs.

7-PS-26

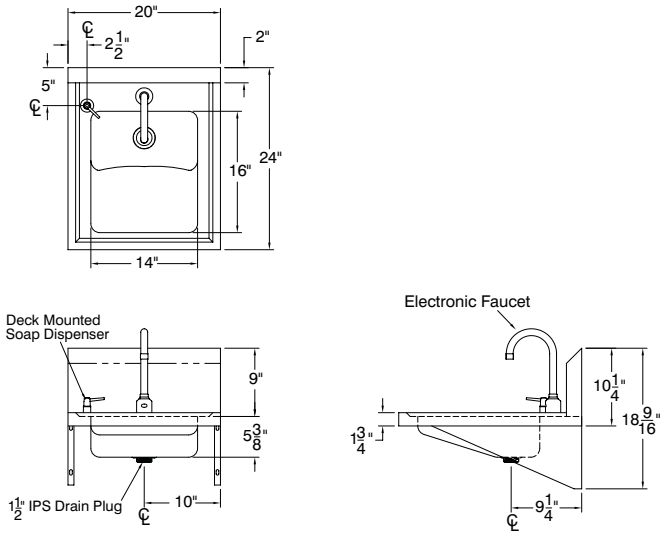

25 lbs.

7-PS-75

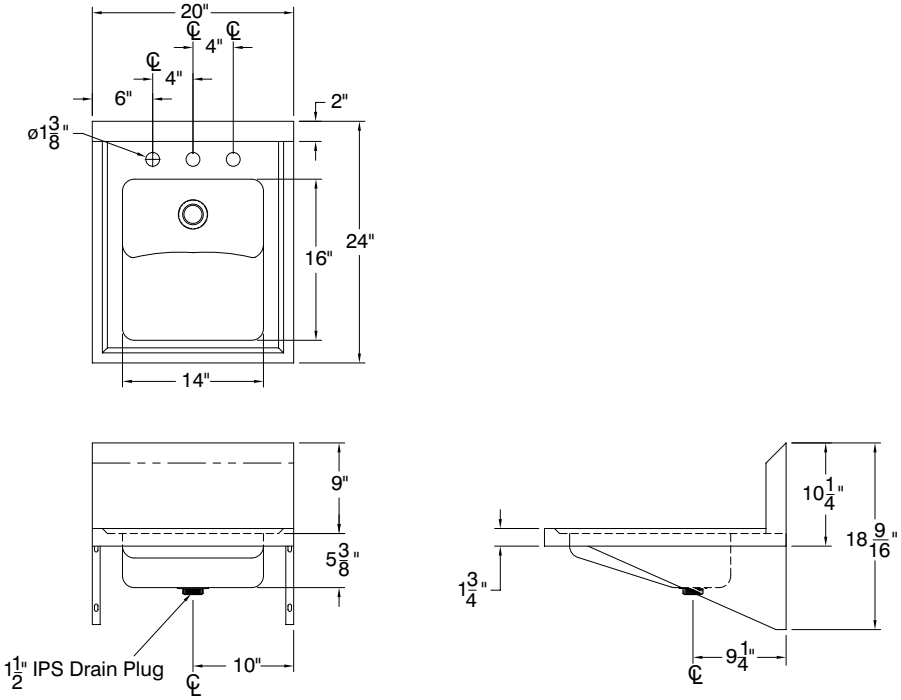

25 lbs.

ADVANCE TABCO
SMART FABRICATION™

325 Wireless Boulevard, Hauppauge, NY 11788

Edlund S-11 NSF Manual Can Openers

For the very highest standard in food safety and sanitation, the S-11 manual can opener has over 17 years of success in foodservice worldwide utilizing proprietary can opening technology. The patented S-11 has successfully opened nearly one billion cans without a single complaint – giving it a stainless reputation. Add in the industry's longest warranty and you've got an opener that's a cut above any other.

- 5-year warranty
- NSF Certified
- Dishwasher safe
- Made in U.S.A.
- Rustproof stainless steel construction
- Parts remove easily for replacement
- Tamper proof model also available
- Available with screw down base or clamp on model
- Standard size or with long bar for taller cans
- Patented

Open up to a higher standard in food safety.

Dishwasher Safe

Toss in the dishwasher for easy cleaning. The industry's first all-stainless can opener, the S-11 resists rust and stays looking new, no matter how many times it's washed.

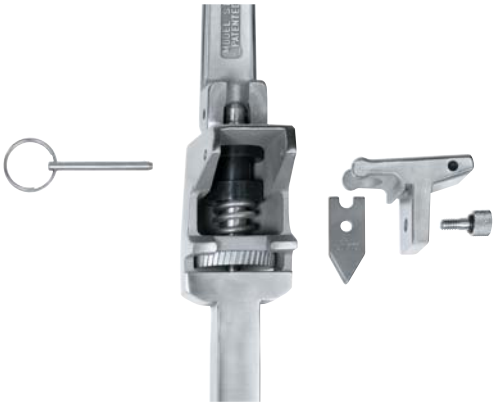

Fewer Parts

The S-11's advanced design means fewer parts than most other openers, and its patented Quick Change Mechanism makes knife and gear replacement fast and easy.

Quick Change Mechanism

Makes gear replacement fast and easy.

S-11 with clamp base

Tamper proof S-11 opener with tamper proof base

ST-93 Rustproof can opener cleaning tool

A tamper proof version of the S-11 is now available equipped with locking hardware.

SPECIFICATIONS:

MODEL #	DESCRIPTION	PRODUCT CODE	CASE CUBE FT^3/M^3	CASE WEIGHT LBS./KGS
S-11	Stainless Steel Can Opener With cast stainless steel base	15000	3.3/0.1	30/13.6
S-11 L	With long bar for cans up to 17″ high (50cm)	15300	3.3/0.1	30/13.6
S-11 E	Comes complete with ST-93 cleaning tool and extra knife and gear	15400	3.3/0.1	31/14.1
S-11 C	Clamping Base Model Now available with clamp instead of screws Secures to underside of table	15020	3.3/0.1	30/13.6
S-11 CL	Clamping Base Model With long bar for cans up to 17″ high (50cm)	15320	3.3/0.1	30/13.6
S-11 CE	Clamping Base Model complete with ST-93 cleaning tool and extra knife and gear	15420	3.3/0.1	32/14.5
S-11 WB	Without Base	15200	3.3/0.1	21/9.5
S-11 TP	Tamper Proof Opener With tamper proof base	15080	3.3/0.1	30/13.6
ST-93	Rustproof can opener cleaning tool	38500		.5/.2

Note: S-11 Series standard length bar is 16″ (40.6 cm) long. Extra long bar is 22″ (55.9) cm) long.

EDLUND ISO 9001:2000 CERTIFIED

NSF®

Edlund *We're in your kitchen.*™

Edlund Company, Inc., 159 Industrial Parkway, Burlington, VT 05401 800-772-2126 www.edlundco.com

12/07 ED01-4021

Item # 12
Quantity

Stainless Steel Utility Carts

Medium Duty - 500 Lb. Capacity

Models 411, 422, 444, 459

Spec. #

Model 422

Ideal For All-Purpose Back-Of-The-House Tasks

- Durable, unitzed electronically welded angle leg frame.
- 20 gauge stainless steel reinforced shelves.
- Protective bumpers on legs and handle safeguard furnishings.
- Sound deadening panels under shelves restrict vibrations and noise.
- 500 lbs. (230 kg.) load capacity

AIA #

Specifications:

Unit shall be of fully welded unitized construction with an overall carrying capacity of 500 pounds. Corner legs shall be of 16-gauge angle stainless steel. Shelves shall be of 20-gauge stainless steel with long shelf edges double hemmed for extra strength, and shall be electronically spot welded to upright legs at all points. Unit shall have a stainless steel push handle welded to frame, and shall have corner bumpers mounted to front legs and ends of push handle. Unit shall have an independent galvanized steel dolly frame fastened to the bottom with 8 screws. Four each 4” swivel casters shall be mounted to the dolly frame.

Models 444 and 459 Only
Unit shall have 4 each 5” diameter swivel casters with non-marking polyurethane wheels. Welded assembly shall have triangular stainless steel reinforcing gussets welded to four bottom corners. Top shelf shall have 16-gauge angle reinforcements welded to long shelf edges.

Lakeside Manufacturing, Inc.
4900 West Electric Avenue • West Milwaukee, WI 53219 U.S.A.
800-558-8565 • 414-902-6400 • Fax 414-902-6446 • info@eLakeside.com • www.eLakesideFoodservice.com

Lit# MDUC 00919

Printed in the U.S.A.

Models
411, 422
444, 459

Stainless Steel Utility Carts

Medium Duty - 500 Lb. Capacity

AIA #

Spec. #

Optional Accessories

(all models)

- Perimeter shelf mounted strip bumper
- Set of two each brake casters
- Cushion tread wheels
- Clear vinyl slipover box type cover

(models 444 and 459)

- Extended perimeter bumper
- 8” swivel casters

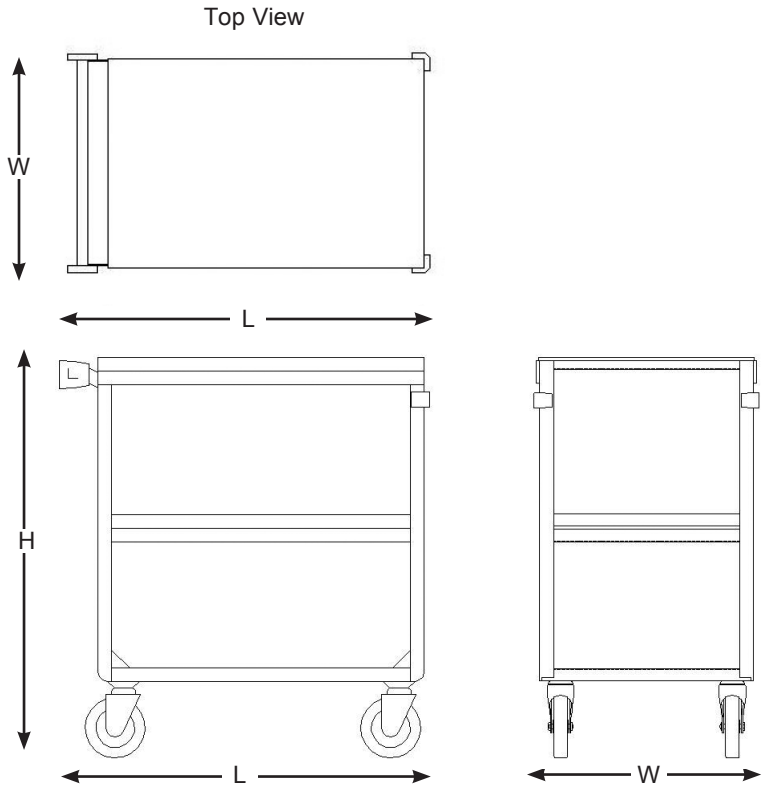

AutoCAD drawings available through KCL CADalog

Dimensions

Model	Shelf Description # of	Shelf Description Size	Shelf Description Clearance	Overall Size W	Overall Size L	Overall Size H	Lake-Glide® Casters Type	Lake-Glide® Casters Dia.	Case Weight lbs.	Case Weight (kg.)
411	3	15-1/2” x 24” (394 x 610)	11-1/2” (302)	16-3/4” (425)	27-5/8” (702)	32” (813)	All swivel	4” (102)	39	(17.7)
422	3	18” x 27” (457 x 686)	11-1/2” (302)	19” (483)	31” (787)	32” (813)	All swivel	4” (102)	42	(19.1)
444	3	21” x 35” (533 x 889)	13-1/8” (333)	22-3/8” (568)	39-1/4” (997)	37-1/4” (946)	All swivel*	5” (127)	68	(30.8)
459	3	21” x 49” (533 x 1245)	13-1/8” (333)	22-3/8” (568)	54-1/8” (1374)	37-1/4” (946)	2 swivel 2 fixed*	5” (127) 5” (127)	88	(39.9)

Measurements in ( ) denote metric millimeters, unless otherwise specified.

LAKESIDE®
Ingenuity On Wheels™

Lakeside Manufacturing, Inc.
4900 West Electric Avenue • West Milwaukee, WI 53219 U.S.A.
800-558-8565 • 414-902-6400 • Fax 414-902-6446
info@eLakeside.com • www.eLakesideFoodservice.com

Lit# MDUC 0919

Printed in the U.S.A.

T&S BRASS AND BRONZE WORKS, INC.

2 Saddleback Cove / P.O. Box 1088
Travelers Rest, SC 29690

REG. #A2601
ISO #9001

Travelers Rest, SC: 800-476-4103 • Simi Valley, CA: 800-423-0150 • Fax: 864-834-3518 • www.tsbrass.com

Model No.
B-0221

Item No.

This Space for Architect/Engineer Approval

Job Name_____Date_____

Model Specified_____ Quantity_____

Customer/Wholesaler_____

Contractor_____

Architect/Engineer_____

ADA Compliant

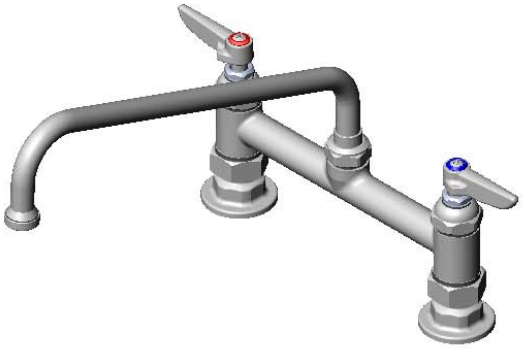

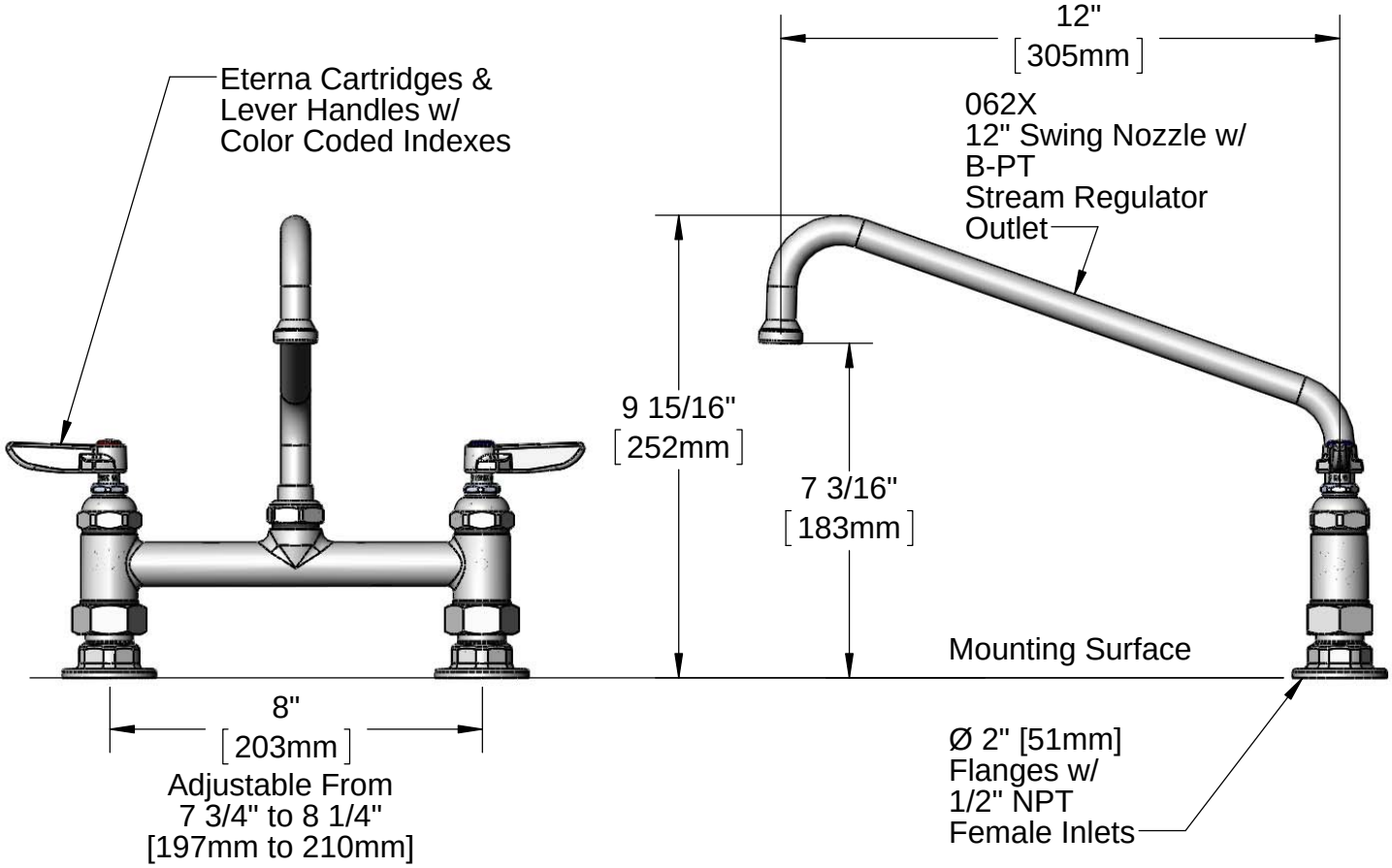

Note: Rough-In Requirement
(2) Ø 1" [25mm] Mounting Holes

Product Specifications:
Double Pantry Faucet w/ Eterna Cartridges, 12" Swing Nozzle w/ B-PT Stream Regulator Outlet, Lever Handles & 1/2" NPT Female Inlets

Drawn	Checked	Approved
DHL	KJG	JHB
Scale: 1:4		Date: 06/17/11

T&S BRASS AND BRONZE WORKS, INC.

2 Saddleback Cove / P.O. Box 1088
Travelers Rest, SC 29690

Travelers Rest, SC: 800-476-4103 Simi Valley, CA: 800-423-0150 Fax: 864-834-3518 www.tsbrass.com

REG. #A2601
ISO #9001

Model No.
B-0221

Item No.

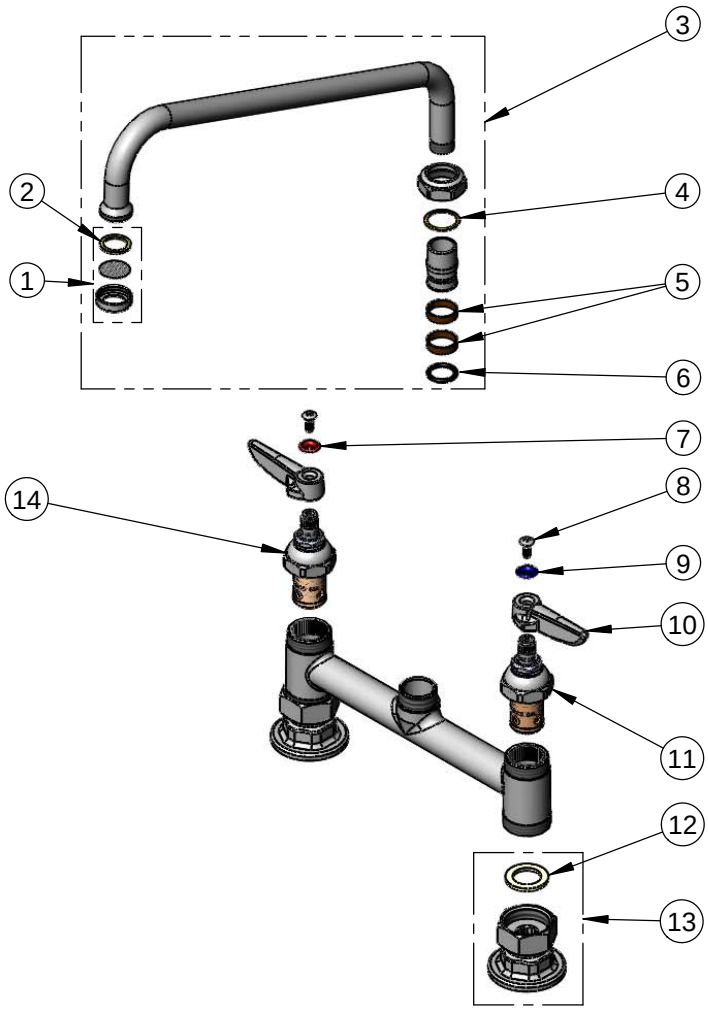

ITEM NO.	SALES NO.	DESCRIPTION
1	B-PT	Stream Regulator
2	001048-45	Nozzle Tip Washer
3	062X	12" Swing Nozzle Assembly w/ B-PT Stream Regulator
4	009538-45	Swivel Washer
5	011429-45	Swivel Sleeves (2)
6	001074-45	O-Ring
7	001661-45	Red Index-HW
8	000922-45	Lever Handle Screw
9	001660-45	Blue Index-CW
10	001638-45	Lever Handle
11	005959-40	Eterna Cartridge - LTC
12	001019-45	Coupling Nut Washer
13	00AA	Flange Assembly
14	005960-40	Eterna Cartridge - RTC

Product Specifications:

Double Pantry Faucet w/ Eterna Cartridges, 12" Swing Nozzle w/ B-PT Stream Regulator Outlet, Lever Handles & 1/2" NPT Female Inlets

Drawn	Checked	Approved
DHL	KJG	JHB
Scale: NTS		Date: 06/17/11

METRO®

SUPER ERECTA® AND SUPER ADJUSTABLE SUPER ERECTA®
Metroseal 3 Shelving

METRO® SEAL 3
with Microban® Antimicrobial Protection

Metroseal 3 is available on Super Erecta and Super Adjustable Super Erecta shelving systems. Metroseal 3 is applied using an exclusive state-of-the-art finishing and coating process that creates an attractive and corrosion-resistant finish. Metroseal 3 is enhanced with built-in Microban® antimicrobial product protection, which protects the Metroseal 3 coating from bacteria, mold, mildew and fungi that cause odors, stains and product degradation.

- **Exclusive Protection:** Metro's new proprietary epoxy coating now contains Microban® antimicrobial product protection. Microban® protects the epoxy coating from bacteria, mold, mildew and fungi that cause odors, stains and product degradation. The storage system remains cleaner between cleanings.
- **Attractive, Corrosion-Resistant Finish:** Metroseal 3 is an attractive corrosion-resistant finish that protects the shelving against corrosive conditions found in walk-in coolers.
- **Metro® Shelving Systems:** Metroseal 3 is a finish for the world's most popular shelving systems, Super Erecta and Super Adjustable Super Erecta. Both systems provide easy assembly without the use of special tools, adjustability at 1" (25mm) increments, greater air circulation and light penetration, a large selection of accessories, and the versatility to change as your storage needs change. Super Adjustable Super Erecta has the added feature of a unique patented corner release making it the easiest to adjust shelving system ever.
- **Economical:** Metroseal 3 storage shelving is an economical alternative to stainless steel, for use in environments that tend to corrode other metals.
- **12-Year Limited Warranty:** Metroseal 3 is a corrosion-resistant finish for environments which can cause other metals to corrode. Metroseal 3 has a 12-year limited warranty against rust formation.

Super Adjustable Super Erecta

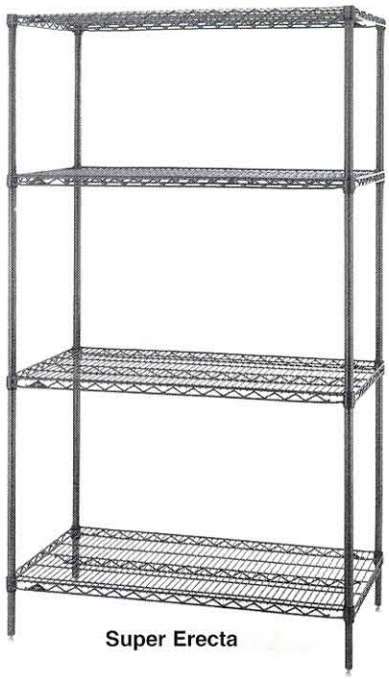

Super Erecta

NSF

*MICROBAN and the MICROBAN symbol are registered trademarks of the Microban Products Company, Huntersville, NC.

METRO®
InterMetro Industries Corporation
North Washington Street
Wilkes-Barre, PA 18705
www.metro.com

EMERSON
Storage Solutions

SUPER ERECTA® AND SUPER ADJUSTABLE SUPER ERECTA®

METROSEAL 3 SHELVING

Metroseal 3 Shelves

Cat. No. Super Adjustable	Cat. No. Super Erecta	Width (in.)	Width (mm)	Length (in.)	Length (mm)	Approx. Pkd Wt. (lbs.)	Approx. Pkd Wt. (kg)
A1424NK3	1424NK3	14	355	24	610	6	2.7
A1430NK3	1430NK3	14	355	30	760	7	3.2
A1436NK3	1436NK3	14	355	36	914	8	3.6
A1442NK3	1442NK3	14	355	42	1066	9 1/2	4.3
A1448NK3	1448NK3	14	355	48	1219	10 1/2	4.7
A1460NK3	1460NK3	14	355	60	1524	14	6.3
A1472NK3	1472NK3	14	355	72	1825	17	7.7
A1824NK3	1824NK3	18	457	24	610	7	3.2
A1830NK3	1830NK3	18	457	30	760	8	3.6
A1836NK3	1836NK3	18	457	36	914	9 1/2	4.3
A1842NK3	1842NK3	18	457	42	1066	11	5.0
A1848NK3	1848NK3	18	457	48	1219	12	5.4
A1854NK3	1854NK3	18	457	54	1370	14 1/2	6.6
A1860NK3	1860NK3	18	457	60	1524	17	7.7
A1872NK3	1872NK3	18	457	72	1825	20	9.1
A2124NK3	2124NK3	21	530	24	610	8	3.6
A2130NK3	2130NK3	21	530	30	760	9	4.1
A2136NK3	2136NK3	21	530	36	914	11	5.0
A2142NK3	2142NK3	21	530	42	1066	12	5.4
A2148NK3	2148NK3	21	530	48	1219	14	6.4
A2154NK3	2154NK3	21	530	54	1370	16	7.3
A2160NK3	2160NK3	21	530	60	1524	18	8.2
A2172NK3	2172NK3	21	530	72	1825	24	10.9
A2424NK3	2424NK3	24	610	24	610	9	4.1
A2430NK3	2430NK3	24	610	30	760	11	5.0
A2436NK3	2436NK3	24	610	36	914	13	5.9
A2442NK3	2442NK3	24	610	42	1066	15	6.8
A2448NK3	2448NK3	24	610	48	1219	16	7.3
A2454NK3	2454NK3	24	610	54	1370	19	8.6
A2460NK3	2460NK3	24	610	60	1524	21	9.5
A2472NK3	2472NK3	24	610	72	1825	26	11.8
A3036NK3		30	760	36	914	15	6.8
A3048NK3		30	760	48	1219	21	9.5
A3060NK3		30	760	60	1524	26 1/2	11.8
A3072NK3		30	760	72	1825	31	14.0
A3636NK3		36	914	36	914	18	8.2
A3648NK3		36	914	48	1219	23	10.4
A3660NK3		36	914	60	1524	29	13.1
A3672NK3		36	914	72	1825	34 1/2	15.4

SiteSelect™ Posts

Cat. No. Metroseal 3	Height* (in.)	Height* (mm)	Approx. Pkd. Wt. (lbs.)	Approx. Pkd. Wt. (kg)
13PK3	14 1/2	368	1	0.5
33PK3	34 1/2	877	2	0.9
54PK3	54 9/16	1386	3	1.4
63PK3	62 9/16	1589	3 1/2	1.6
74PK3	74 5/8	1895	4	1.8
86PK3	86 5/8	2200	5	2.3

*Height includes leveling bolt and cap.

Every Metroseal 3 shelf and post is backed by a limited 12-year warranty against surface rust formation.

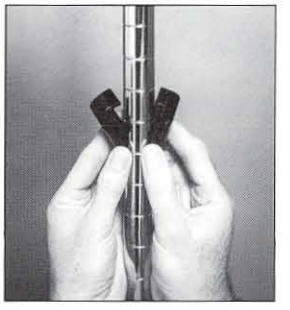

Super Erecta Split Sleeves

Super Adjustable Wedges and Corner Release System

Important: When ordering by components remember that stability decreases as the ratio of height to width increases. Units should be kept as wide and low as possible.

SiteSelect™ Posts are grooved at 1" (25mm) increments and numbered at 2" (50mm) increments. Posts are double-grooved every 8" (203mm) for easy identification.

All Metro Catalog Sheets are available on our Web Site: **www.metro.com**

InterMetro Industries Corporation
North Washington Street, Wilkes-Barre, PA 18705
Phone: 570-825-2741 • Fax: 570-825-2852
For Product Information Call: 1-800-433-2232

L02-010B
Printed in U.S.A. Rev. 11/02

Item # _____

Job _____

METRO®
STEM CASTERS

- **Metro Stem-Type Casters** are designed to fit Super Erecta Shelf® posts to form shelf carts and other mobile units.
- **Stainless Steel, Cart-Washable Casters** offer grease seals and zerk fittings. Can withstand high-pressure washings.
- **Polymer Horn Casters:** Innovative polymer stem casters offer corrosion resistance and enhanced durability. For all medium-duty applications.
- **Resilient Rubber Tread:** A molded, soft tread that provides good floor protection along with quiet operation. Non-marking.
- **Polyurethane Tread:** Long-wearing; resists abrasion. Non-marking, shock absorbing.
- **Wheel Brakes:** Foot-operated. Available on all caster models.
- **Caster Load Ratings:** From 125 lbs. to 300 lbs. (57 to 136kg) See chart.
- **Donut Bumpers:** Furnished standard on all Metro stem casters.
- **Additional Caster Types Available.**

Note: SPECIAL WHEELS — V-groove, Conductive, Steel and Phenolic — are available on request. For additional information, contact InterMetro Industries Corporation or your InterMetro representative.

Resilient Rubber

5MB Wheel Brake
Includes Donut Bumper (not shown)

5M Resilient
Includes Donut Bumper (not shown)

Stainless Steel, Cart Washable

5MDBGSA

5MDGSA

Polymer Horn Casters

5PCB

5PC

InterMetro Industries Corporation
North Washington Street
Wilkes-Barre, PA 18705
www.metro.com

Job _____

METRO®
STEM CASTERS

Dimensions
Standard Casters — Stem Type

Cat. No.	Wheel Diameter (in.)	Wheel Diameter (mm)	Face (in.)	Face (mm)	Load Rating (lbs.)	Load Rating (kg)	Type	Wheel Tread	Approx. Pkd. Wt. (lbs.)	Approx. Pkd. Wt. (kg)
4LD	4	102	1/2	12	125	56	Stem/Swivel	Resilient	1 1/2	.6
5LD	5	127	1/2	12	125	56	Stem/Swivel	Resilient	2	.9
5M	5	127	1 1/4	32	200	90	Stem/Swivel	Resilient	2 1/2	1.1
5MB	5	127	1 1/4	32	200	90	Stem/Brake	Resilient	2 3/4	1.2
5MR	5	127	1 1/4	32	200	90	Stem/Rigid	Resilient	3 1/2	1.5
5MDA	5	127	1 1/4	32	250	111	Stem/Swivel	High Modulus Donut	2 1/2	1.1
5MDBA	5	127	1 1/4	32	250	111	Stem/Brake	High Modulus Donut	2 5/8	1.17
5MDRA	5	127	1 1/4	32	250	111	Stem/Rigid	High Modulus Donut	2 3/8	1.08
5MP	5	127	1 1/4	32	300	135	Stem/Swivel	Polyurethane	2 1/8	.94
5MPB	5	127	1 1/4	32	300	135	Stem/Brake	Polyurethane	2 1/4	1
5MPR	5	127	1 1/4	32	300	135	Stem/Rigid	Polyurethane	2	.9

NOTE 1: Stem casters are shipped with donut bumper **at no additional charge.**
NOTE 2: Rigid casters are held in position by a connecting channel. When ordering rigid casters, shelf width **must be** known.
NOTE 3: Load Height for all 5M, 5MD and 5MP casters — 6 3/32" ± 1/16" (155 ± 1.5mm).
NOTE 4: Load Height for 4LD caster — 4 5/8" ± 1/16" (118 ± 1.5mm).
NOTE 5: Load Height for 5LD caster — 5 5/8" ± 1/16" (143 ± 1.5mm).
NOTE 6: Brakes are foot-operated.

Stainless Steel Cart-Washable Casters — Stem Type

Cat. No.	Wheel Diameter (in.)	Wheel Diameter (mm)	Face (in.)	Face (mm)	Load Rating (lbs.)	Load Rating (kg)	Type	Wheel Tread	Approx. Pkd. Wt. (lbs.)	Approx. Pkd. Wt. (kg)
5MDGSA	5	122	1 1/4	32	150	68	Swivel	High Modulus Donut	2 1/2	1.1
5MDBGSA	5	122	1 1/4	32	150	68	Brake	High Modulus Donut	2 5/8	1.17
5MDRGSA	5	122	1 1/4	32	150	68	Rigid	High Modulus Donut	2 3/8	1.08
5MPGSA	5	127	1 1/4	32	300	135	Swivel	Polyurethane	2 1/8	.94
5MPBGSA	5	127	1 1/4	32	300	135	Brake	Polyurethane	2 1/4	1
5MPRGSA	5	127	1 1/4	32	300	135	Rigid	Polyurethane	2	.9

NOTE 1: Stem casters are shipped with donut bumper **at no additional charge.**
NOTE 2: Rigid casters are held in position by a connecting channel. When ordering rigid casters, shelf width **must be** known.
NOTE 3: Load Height for all 5MD and 5MP casters — 6 3/32" ± 1/16" (155 ± 1.5mm).
NOTE 4: All casters are grease sealed with zerk fittings in swivel and axle.
NOTE 5: Brakes are foot-operated.
NOTE 6: "D" in model number designates donut wheel made of high-modulus rubber.

Polymer Casters — Stem Type

Cat. No.	Wheel Diameter (in.)	Wheel Diameter (mm)	Face (in.)	Face (mm)	Load Rating (lbs.)	Load Rating (kg)	Type	Wheel Tread	Approx. Pkd. Wt. (lbs.)	Approx. Pkd. Wt. (kg)
5PC	5	127	1 1/4	32	300	135	Swivel	Polyurethane	2	.9
5PCB	5	127	1 1/4	32	300	135	Brake	Polyurethane	2	.9
5PCR	5	127	1 1/4	32	300	135	Rigid	Polyurethane	2	.9

NOTE 1: Optional thread guards (blue) may be ordered by adding "-TG" to the desired model number (eg. 5PC-TG, 5PCB-TG, 5PCR-TG).
NOTE 2: Stem casters are shipped with donut bumper **at no additional charge.**
NOTE 3: Rigid casters are held in place by a connecting channel. When ordering, shelf depth **must be** provided.

Manufactured by:

InterMetro Industries Corporation
North Washington Street, Wilkes-Barre, PA 18705
Phone: 570-825-2741 • Fax: 570-825-2852
For Product Information Call: 1-800-433-2232
Visit Our Web Site: www.metro.com

L02-041
Rev. 9/00
Printed in U.S.A.

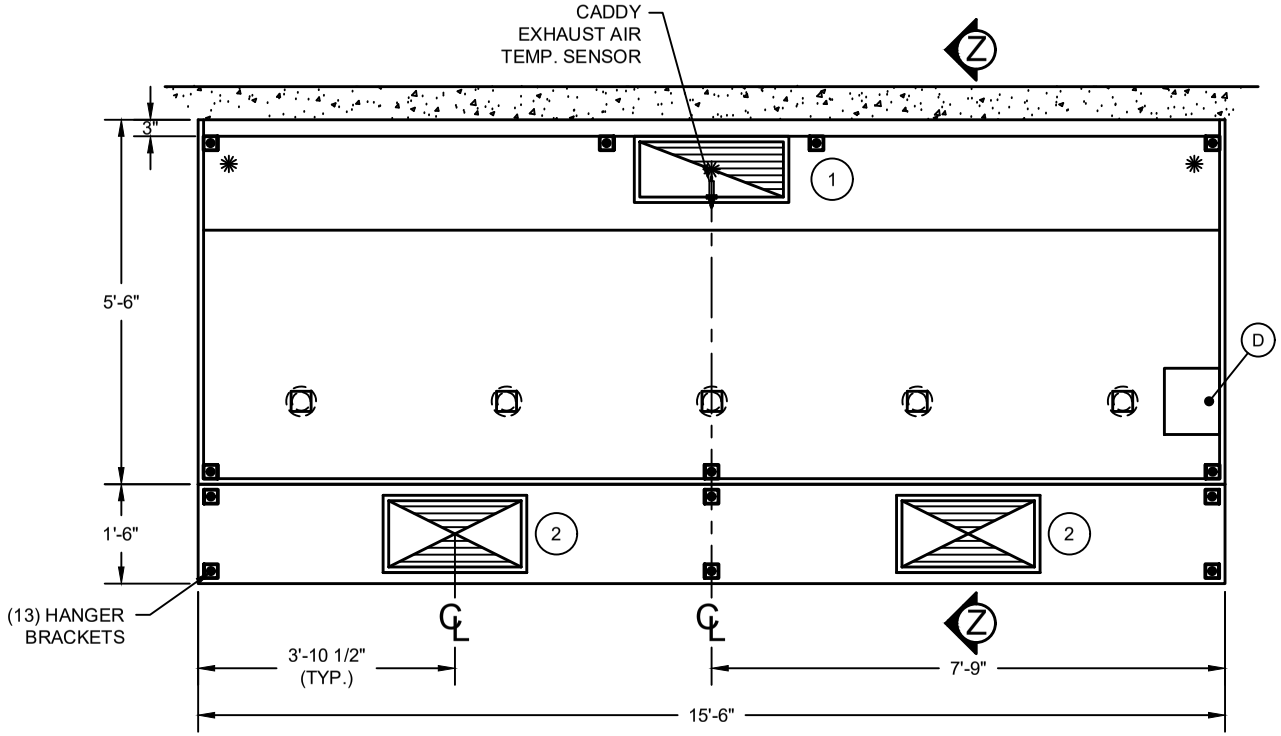

PLAN

OPTIONS

(1) FAN CONTROL PACKAGE ON TOP OF HOOD W/ REMOTE FAN AND LIGHT SWITCHES
(1) TEMP SENSOR
(3) REMOVABLE SLIDING BALANCING DAMPERS FOR EXHAUST AND SUPPLY

(D) (5) LED DOME LIGHT FIXTURES (0.06 K.W., 120/1/60 CONNECTED LOAD)

TOTAL EXHAUST : 3,255 C.F.M.	
TOTAL SUPPLY : 2,604 C.F.M.	

(1) 10" X 26" EXHAUST DUCT 3,255 C.F.M. @ 0.75" S.P.	(2) 12" X 24" SUPPLY DUCTS 1,302 C.F.M. EACH @ 0.20" S.P.

FIRE PROTECTION SYSTEM : ANSUL R-102 (SURFACE, PLENUM, AND DUCT COLLAR PROTECTION).

FAN CONTROL PACKAGE

(TO BE MOUNTED ON TOP OF HOOD CANOPY)

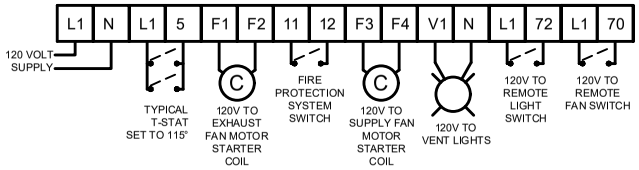

TOTAL EST. HANGING WT. : 1,395 LBS.

CADDY AirSystems
509 SHARPTOWN ROAD
P.O. BOX 345 BRIDGEPORT NJ 08014
Tel:(856) 467-4222 Fax:(856) 467-5511

Mechanical Air Data & Dimensions

ITEM #: 1	CADDY #: 39547	MODEL #: SHBC-C-W-186-ND-66 W/ CEILING SUPPLY PLENUM
JOB NAME: COOPERTOWN ES READING, PA		DATE: 12/11/24
		DR. BY: K. DIAZ
		SH. #: 1 OF 3

THIS DRAWING IS PROVIDED AS A PRELIMINARY DESIGN DATA SHEET.
IT IS NOT TO BE USED FOR CONSTRUCTION OR FABRICATION APPROVAL PURPOSES.

MD-03508

ANSUL®

Restaurant Fire Suppression Systems

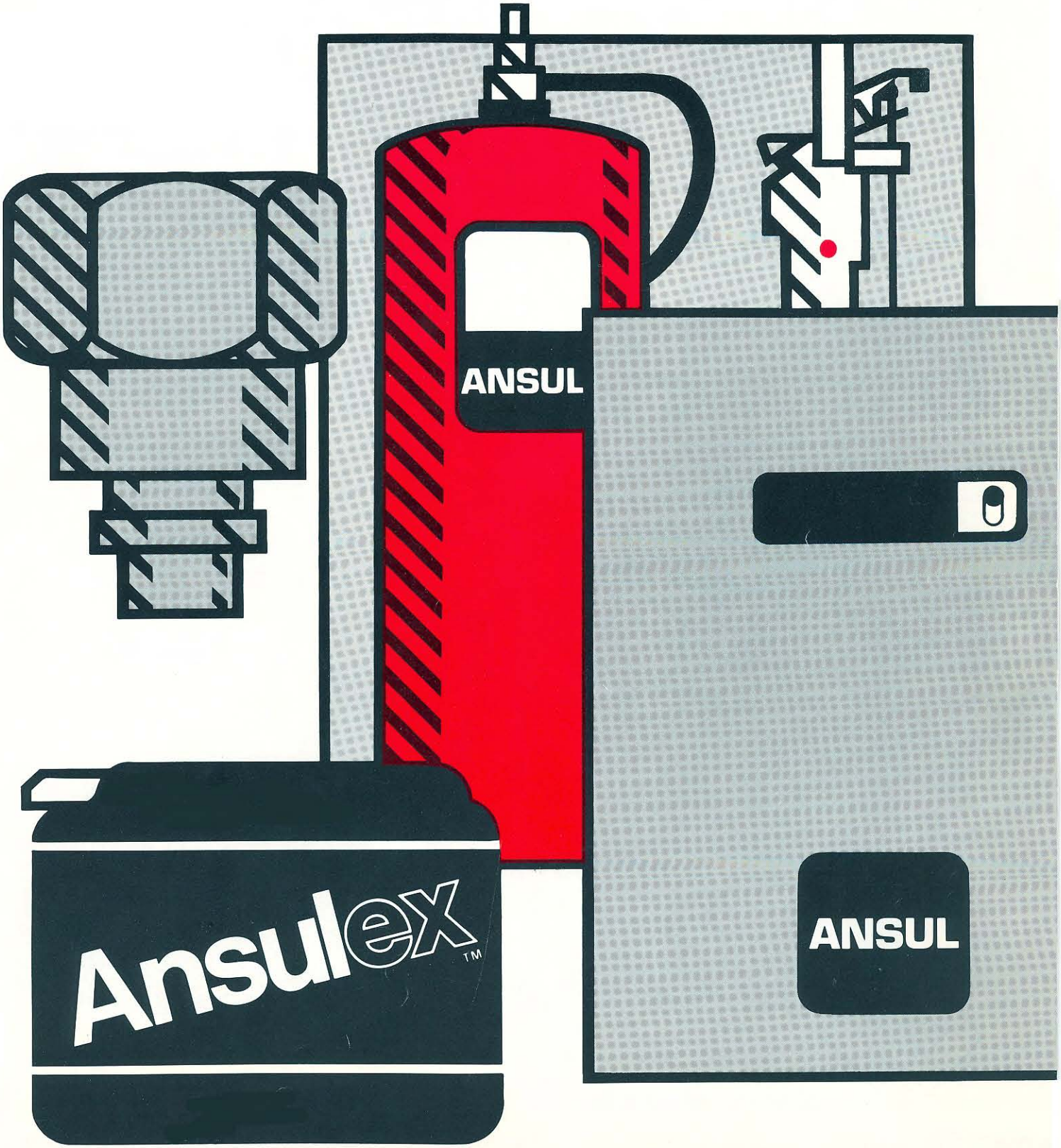

Check out the features of the Ansul R-102 System...

Stainless Steel Enclosure... An Ansul exclusive... aesthetically appealing... blends in with kitchen equipment... protects against tampering, damage.

Agent Storage Tank... Carbon steel... pressurized only when system is actuated... leak-proof... low maintenance... allows for fast, on-site recharging.

Nitrogen Cartridge... Positive seal, self-contained, no maintenance of valve required.

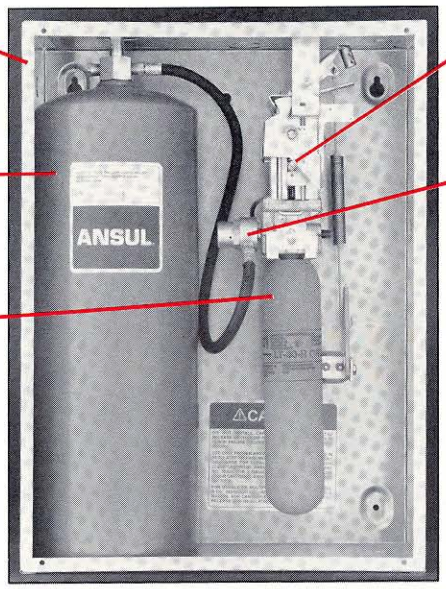

ANSUL AUTOMAN Release... Visible cocked/fired indicator... provides positive actuation of system... needs no periodic adjustment.

Regulator... 100 psi regulated pressure ensures constant flow of agent and consistent nozzle discharge pattern.

Manual Pull Station... Permits quick, sure manual actuation of the system by anyone regardless of fire fighting experience... break rod indicating manual system operation.

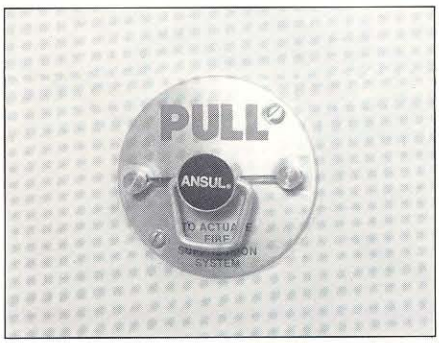

Fuse Link Detection System... Unique bracketing provides positive actuation upon exposure to heat.

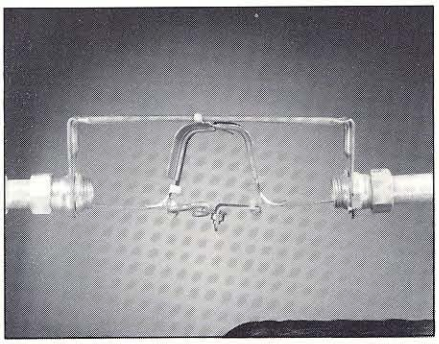

Hood-Seal Adaptors... Threaded or compression-seal options provide tight seal for hood penetrations required for distribution pipe or detection lines... more aesthetically appealing than welded seal.

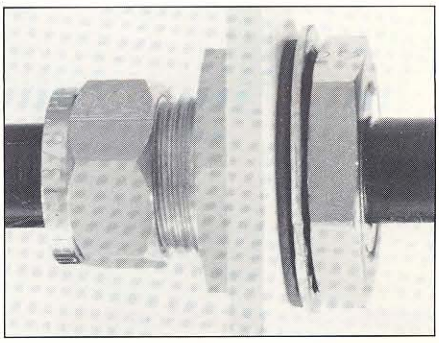

Nozzles... Designed to provide agent discharge coverage to each special hazard area... special blow-off caps reduce the risk of grease vapor contamination... chrome plating matches hood and appliances.

Mechanical or Electrical Gas Shutoff Valve... Shuts off fuel or power source upon detection of fire... clearly marked open/closed indicator.

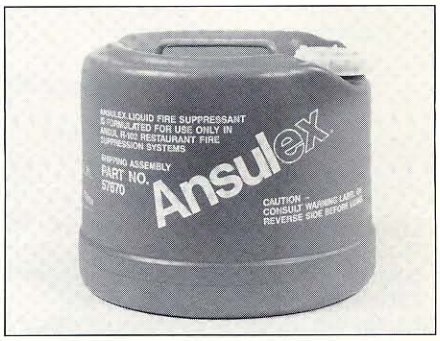

ANSULEX Liquid Fire Suppressant... Effective fire suppression for all restaurant duct, hood and appliance hazard areas... helps to prevent fire reflash... easy, fast clean up after discharge... rechargeable on-site with minimum downtime.

ANSUL®

RESTAURANT FIRE SUPPRESSION SYSTEMS DATA SHEET

GENERAL SPECIFICATIONS MODEL R-102

Total System

The restaurant fire suppression system shall be the pre-engineered, liquid agent, cartridge-operated type with a fixed nozzle agent distribution network. It shall be listed with Underwriters Laboratories, Inc. (UL).

The system shall be capable of automatic detection and actuation with local or remote manual actuation. Accessories shall be available for mechanical or electrical gas line shut-off applications.

The system shall have fire suppression capabilities for the following restaurant hazard areas: ventilating structures including hoods, ducts, plenums, and filters; deep-fat fryers; griddles and range tops; upright, natural charcoal, or chain-type broilers; electric, lava rock, mesquite or gas-radiant char-broilers.

A system owner's manual* shall be available containing basic information pertaining to system operation. A detailed technical manual shall be available including system description, design, installation, recharge, and maintenance procedures, plus accessory installation and reset instructions.

The system shall be installed and serviced by authorized distributors that are trained and certified by the manufacturer.

System Equipment

Agent – The extinguishing agent shall be a potassium carbonate, potassium acetate-based formulation designed for flame knockdown and securement of grease-related fires. It shall be available in plastic containers with instructions for liquid agent handling and usage.

Agent Tank – The agent tank shall be installed in a stainless steel enclosure or wall bracket. The tank shall be stainless steel or deep drawn carbon steel finished in red enamel. The tank shall be hydrostatically tested at intervals not exceeding 12 years.

The tank shall have a nominal capacity of 1.5 gal. (5.7 L) or 3 gal. (11.4 L) with a working pressure of 100 psi (690 kPa), a test pressure of 300 psi (2069 kPa), and a minimum burst pressure of 600 psi (4137 kPa).

The tank shall include an adaptor/tube assembly. The adaptor shall be chrome-plated steel with a 1/4-18 NPT female inlet and a 1/2-14 NPT male outlet. The pick-up tube shall be carbon steel – 1/2 in. O.D. by .028 wall. A vent plug shall be integral to the adaptor.

* The Ansul R-102 Restaurant Fire Suppression System Installation, Recharge, and Maintenance Manual is Part No. 71961.

Regulated Release Mechanism – The regulated release mechanism shall be the spring-loaded, mechanical/pneumatic type capable of providing the expellant gas supply to one or two agent tanks, depending on the capacity of the nitrogen cartridge used. It shall contain a factory-installed regulator deadset at 100 psi (690 kPa) with an internal relief of approximately 130-150 psi (896-1034 kPa). In the "armed" position, the main spring force to the puncture pin piston shall be 150 lb. (68 kg). The mechanism shall have a visual indicator of the cocked or fired condition without having to open the enclosure.

The regulated release mechanism shall have the following actuation capabilities: automatic actuation by a fusible link detection system; remote manual actuation by a mechanical pull station; local manual actuation by a push button located at the front of the release mechanism enclosure.

The regulated release mechanism shall contain a release assembly, regulator, expellant gas hose, and agent tank housed in a stainless steel enclosure with cover. The enclosure shall contain knock-outs for 1/2 in. conduit. The cover shall contain openings for the push button and visual indicator.

The regulated release mechanism shall be compatible with mechanical gas line shut-off devices; or, when equipped with a field or factory-installed solenoid and switch, it shall be compatible with electric gas line or appliance shut-off devices.

Regulated Actuator – When more than two agent tanks are required, the regulated actuator(s) shall be available to provide expellant gas for additional tank(s). It shall be connected to the cartridge receiver outlet of the regulated release mechanism providing simultaneous agent discharge. It shall contain a regulated actuator deadset at 100 psi (690 kPa) with an internal relief of approximately 130 to 150 psi (896 to 1034 kPa).

The regulated actuator assembly shall contain a regulated actuator, regulator, expellant gas hose, and agent tank housed in a stainless steel enclosure with cover. The enclosure shall contain knockouts to permit installation of expellant gas line.

Tank/Bracket Assembly – The tank/bracket assembly shall contain a welded steel bracket and agent tank. The bracket shall be provided to mount the agent tank in a minimum amount of space. The tank shall be secured with hinged bracket bands.

Discharge Nozzles – Each discharge nozzle shall be tested and listed with the restaurant system for specific applications. The nozzle tip shall be brass or chrome-plated brass, and stamped with the part number and flow rating. The nozzle tip retainer and body shall be chrome-plated brass. The nozzle strainer shall be brass with stainless 50 mesh screen. Each nozzle tip shall be covered by a protective blow-off cap.

Detection System – The regulated release mechanism shall be compatible with a fusible link detection system.

The fusible link shall be selected and installed according to the operating temperature in the ventilating system.

The fusible link shall be supported by a detector bracket/linkage assembly. The detector bracket shall be 16 ga. cold-rolled stainless steel. The detector linkage shall be 20 ga. cold-rolled stainless steel.

The detector bracket/linkage assembly shall have provisions for connecting 1/2 in. rigid or EMT thin-wall conduit, and 1/16 in. (1.6 mm) diameter flexible stainless steel rope. Changes in the direction of the conduit and steel rope shall be accomplished with die cast aluminum alloy, 90° pulley elbows.

Accessory Equipment

The following accessory equipment shall be available, and shall be compatible with the liquid agent restaurant fire suppression system:

Remote Manual Pull Station – If the release mechanism is not accessible for manual actuation, a remote manual pull station shall be provided as the primary means of manual actuation. The pull station shall be the break-rod type, and shall be connected to the release mechanism trip lever by means of a 1/16 in. (1.6 mm) diameter stainless steel rope and 1/2 in. conduit. The pull station shall be located at a distance of not more than 125 ft. (38 m) from the release mechanism. The mounting height of the pull station shall be in accordance with the authority having jurisdiction.

Mechanical Gas Line Shut-Off Valve – A UL listed, mechanical gas valve shall be provided when automatic gas line shut-off is required for indoor applications. It shall be adapted to the release mechanism cartridge receiver by means of a pneumatic piston-type air cylinder. The valve shall have resilient seating with an aluminum body and stainless steel internal parts. It shall be a two-way valve requiring 4-15 lb. (1.8-6.8 kg) of pull force to trip. The valve (3/4 to 2 in.) shall have an external visual indicator of the closed or open position.

Electric Gas Line Shut-Off Valve – A UL listed, electric gas valve shall be provided when an electrical means of gas line shut-off is required for indoor applications. The gas valve shall incorporate an electric snap-action switch and a manual reset relay with its electric circuit for 110 VAC, 50/60 Hz or 24 VAC, 50/60 Hz. In 24 VAC applications, a transformer with the appropriate voltage rating shall be provided. The gas valve shall be constructed of aluminum with an operating temperature range of 32 °F to 120 °F (0 °C to 49 °C).

Electric Switch – A UL listed, electric snap-action switch shall be provided to shut off electrical power to appliances, or to activate electrically-operated devices. Depending on the application, the switch shall be either single-pole, double-throw; double-pole, double-throw; or four-pole, double-throw. The switch shall have a rating of 15 amps, 1/3 hp, 125 or 250 VAC with 5 amps at 125 VAC "L," 1/2 amp at 125 VDC, or 1/4 amp at 250 VDC. A relay shall be supplied if the equipment load exceeds the rated capacity of the switch.

Pressure Switch – A UL listed, pneumatically-operated switch shall be provided to shut off electrical power to appliances, or to activate electrically-operated devices. The switch shall be connected to the release mechanism cartridge receiver utilizing 1/8 in. copper tubing and fittings. Depending on the application, the switch shall be single-pole, double-throw or double-pole, double-throw. The switch shall have a rating of 20 amps – 125, 250, or 480 VAC with 10 amps at 125 VAC "L," 1 hp-115 VAC, 2 hp-230 VAC; 1/2 amp at 125 VDC; or 1/4 amp at 250 VDC. A relay shall be supplied if the equipment load exceeds the rated capacity of the switch.

GARLAND

Cuisine Series Heavy Duty 18″ Add-A-Unit

Project _____

Item _____

Quantity _____

CSI Section 11400

Approved _____

Date _____

Models

- C18-7S
- C18-7M

Model C18-7S
18″ Add-A-Unit
Open Burners

Standard Features

- Two 40,000 BTU/h (NG) Garland Starfire open top burners
- One-piece cast iron grates and bowls over each open top burner
- Stainless steel front and sides
- Stainless steel front rail
- Stainless steel burner box
- 1-1/4″ NPT front gas manifold
- Can be installed individually or in a battery
- 7″ (178mm) high stainless steel stub back
- 6″ (152mm) stainless steel adj. legs
- Modular unit (M) can be mounted on Polar Cuisine refrigerated base

Options & Accessories

- Single or double deck high shelf or back riser
- Full-height stand for modular base with legs or casters
- Stainless steel intermediate shelf for cabinet base
- Stainless steel door for cabinet base units
- Stainless steel back
- Continuous plate rail, 48-72″ for battery installations
- Gas shut-off valves: 3/4″ (M/S models only), 1″, 1 1/4″ NPT (Specify)
- Gas regulator: 3/4″ (M/S models only), 1″, 1 1/4″ NPT (Specify)
- Gas flex hose w/ quick disconnect: 3/4″ (M/S models only), 1″, 1 1/4″ NPT (Specify)
- Rear gas connection: 3/4″ NPT
- Set of (4) flanged feet (for fastening unit to the floor)
- Set of (4) 5″ polyurethane non-marking swivel casters w/front brakes
- Set of (4) 6″ swivel casters, w/front brakes
- Extension for 1/9 pans

Specifications

Garland Cuisine Series Add-A-Unit, Model _____ with total BTU/h rating _____ when used with natural/propane gas. Stainless steel finish & 6″ (152mm) legs w/adjustable feet.

Open Burners - 40,000 BTU/h burner and a one piece grate and bowl over each burner.

NOTE: Ranges supplied with casters must be installed with an approved restraining device.

Cuisine Series Heavy Duty 18″ Add-A-Unit

Garland Commercial Ranges Ltd.
1177 Kamato Road,
Mississauga, Ontario
L4W 1X4 CANADA

General Inquires 1-905-624-0260
USA Sales, Parts and Service 1-800-424-2411
Canadian Sales 1-888-442-7526
Canada or USA Parts/Service 1-800-427-6668

www.garland-group.com
7888A
02/24

WELBILT

GARLAND

Cuisine Series Heavy Duty 18" Add-A-Unit

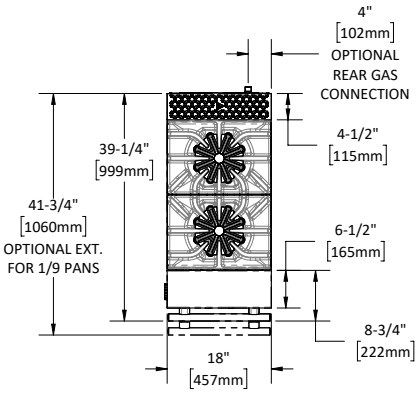

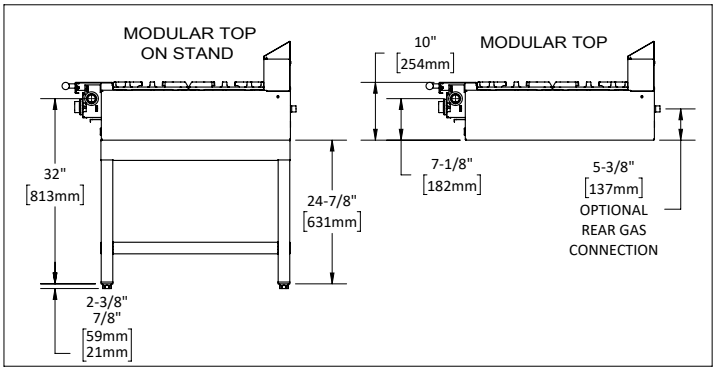

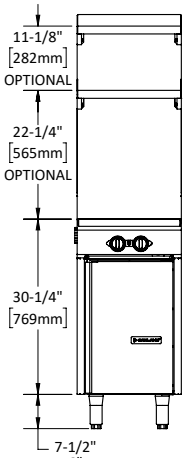

OPTIONAL 5" [127mm] CASTERS

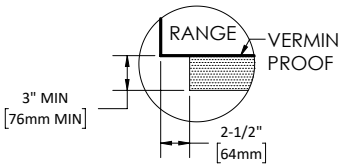

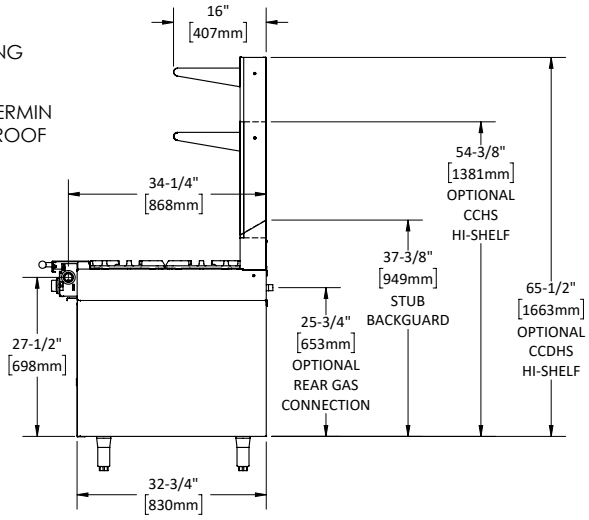

Model #	Description	Total BTU/h NAT. Gas	Total BTU/h Propane	Shipping	
				Cu Ft	lbs/kg
C18-7S	18" (457mm) OB with Storage Base	80,000	76,000	28	227/103
C18-7M	18" (457mm) OB Modular Top	80,000	76,000	26	227/103

OB = Open Burner

Individual Burner Ratings (BTU/h)		
Burner	NAT.	PRO.
Open Top	40,000	38,000

Dimensions: In (mm)	Unit	Cabinet Interior
Width	18" (457mm)	15-1/2" (394mm)
Depth	39 3/8" (1001mm)	28-1/2" (724mm)
Height	30 1/4" (769mm)	19-1/2" (495mm)
Height w/ 6" legs	36 1/4" (921mm)	N/A

Combustible Wall Clearance	
Sides	Back
10" (254mm)	6" (152mm)

Gas Pressure	NAT.	PRO.
Minimum Supply	7" WC	11" WC
Manifold Operating Pressure	6" WC	10" WC
Gas Manifold 1-1/4" NPT		

Garland reserves the right to make changes to the design or specifications without prior notice.

Garland Commercial Ranges Ltd.
1177 Kamato Road,
Mississauga, Ontario
L4W 1X4 CANADA

General Inquires 1-905-624-0260
USA Sales, Parts and Service 1-800-424-2411
Canadian Sales 1-888-442-7526
Canada or USA Parts/Service 1-800-427-6668

www.garland-group.com

7888A
02/24

WELBILT

Job Name _____
Job Location _____
Engineer _____
Approval _____

Contractor _____
Approval _____
Contractor's P.O. No. _____
Representative _____
SKU _____

Double Swivel MAX® /SnapFast® Quick-Disconnect Assemblies

Sizes: ½" to 1¼" (15 to 32mm)

Double Swivel MAX/SnapFast Quick-Disconnect Assemblies feature flexible movement and the one-handed quick-disconnect fitting with a unique thermal shut-off design that automatically shuts off the gas when the internal temperature exceeds 350°F (177°C). The 360° movement of Swivel MAX at both ends gives maximum protection to the life of the connector and greatly increases kitchen aisle space by allowing the appliance to be closer to the wall.

Features

Swivel MAX®

Multi-plane Fitting	Aluminum body, plated steel fitting
Movement	360° rotational end fitting

SnapFast® One-Handed Quick-Disconnect

Quick-Disconnect	Brass body, aluminum collar
Thermal Shut-off	Shuts off gas when internal temperatures exceed 350°F (177°C)

Specifications

The Dormont Blue Hose®

Tubing	Annealed, 304 stainless steel
Braiding	Multi-strand, stainless steel wire
Coating	Blue antimicrobial PVC, melts at 350°F (177°C), coating will not hold a flame
End Fittings	Carbon steel; zinc trivalent chromate
Stress Guard®	360° rotational end fitting at both ends

Additional Components

Restraining Device	PVC coated, steel multi-strand cable and mounting hardware
Valve	Full port, brass body

Approvals & Certifications

NSF/ANSI 169 – Special-purpose food equipment and devices
ANSI Z21.69 / CSA 6.16 – Connectors for moveable gas appliances
ANSI Z21.41 / CSA 6.9 – Quick-Disconnect Devices for use with gas fuel appliances
ANSI Z21.15 / CSA 9.1 – Manually operated gas valves for appliances, appliance connectors
UL 567 _ Pipe connectors for flammible and combustible liquids and LP gas
Meets requirements of ANSI Z223.1 / NFPA 54 National Fuel Gas Code
Not for use in temperatures less than 32°F (0°C). For indoor use only.
Max operating pressure 1/2 psi.
Refer to the catalog for additional approvals and certifications or go to www.dormont.com.
A restraining device is required for all moveable gas equipment.

Safety System™ The Dormont Safety System™ is the first and only complete gas equipment connection system specifically engineered for the commercial kitchen. The Safety System consists of the famous Dormont Blue Hose and a variety of accessories designed for improved safety and performance in commercial kitchens. Because they are manufactured in the USA under an ISO qualified production process and to multiple design certifications, you can Connect with Confidence with the Dormont Safety System.

Dormont®

Double Swivel MAX® with SnapFast® Quick-Disconnect Deluxe Kit Assembly

Ordering Information

		LENGTH				
Configuration	Size I.D.	24" (607mm)	36" (914mm)	48" (1,219mm)	60" (1,524mm)	72" (1,829mm)
Deluxe Kit* Basic Kit** Hose Assembly***	½" (15mm)	1650KIT2S24 1650BPQ2SR24 1650BPQ2S24	1650KIT2S36 1650BPQ2SR36 1650BPQ2S36	1650KIT2S48 1650BPQ2SR48 1650BPQ2S48	1650KIT2S60 1650BPQ2SR60 1650BPQ2S60	1650KIT2S72 1650BPQ2SR72 1650BPQ2S72
Deluxe Kit* Basic Kit** Hose Assembly***	¾" (20mm)	1675KIT2S24 1675BPQ2SR24 1675BPQ2S24	1675KIT2S36 1675BPQ2SR36 1675BPQ2S36	1675KIT2S48 1675BPQ2SR48 1675BPQ2S48	1675KIT2S60 1675BPQ2SR60 1675BPQ2S60	1675KIT2S72 1675BPQ2SR272 1675BPQ2S72
Deluxe Kit* Basic Kit** Hose Assembly***	1" (25mm)	16100KIT2S24 16100BPQ2SR24 16100BPQ2S24	16100KIT2S36 16100BPQ2SR36 16100BPQ2S36	16100KIT2S48 16100BPQ2SR48 16100BPQ2S48	16100KIT2S60 16100BPQ2SR60 16100BPQ2S60	16100KIT2S72 16100BPQ2SR72 16100BPQ2S72
Deluxe Kit* Basic Kit** Hose Assembly***	1¼" (32mm)	16125KIT2S24 16125BPQ2SR24 16125BPQ2S24	16125KIT2S36 16125BPQ2SR36 16125BPQ2S36	16125KIT2S48 16125BPQ2SR48 16125BPQ2S48	16125KIT2S60 16125BPQ2SR60 16125BPQ2S60	16125KIT2S72 16125BPQ2SR72 16125BPQ2S72

BTU/hr Flow Capacity Natural Gas (Flow rating BTU/hr 0.64 SP. GR. @ 0.5 inch WC pressure drop)

		LENGTH				
Model	Size I.D.	24" (607mm)	36" (914mm)	48" (1,219mm)	60" (1,524mm)	72" (1,829mm)
1650BPQ2S	½" (15mm)	77,000	69,000	60,000	54,000	48,000
1675BPQ2S	¾" (20mm)	205,000	193,000	160,000	140,000	124,000
16100BPQ2S	1" (25mm)	366,000	336,000	295,000	261,000	247,000
16125BPQ2S	1¼" (32mm)	472,000	461,000	449,000	441,000	440,000

***Deluxe Kits include:** The Dormont Blue Hose, Double Swivel MAX, SnapFast, restraining device and full port valve
****Basic Kits include:** The Dormont Blue Hose, Double Swivel MAX, SnapFast, and restraining device
*****Hose Assemblies include:** The Dormont Blue Hose, Double Swivel MAX, SnapFast

Typical Installation

The Dormont Blue Hose®

The Dormont Blue Hose is a commercial, moveable-grade gas connector designed for use with moveable equipment.

Moveable equipment is defined in ANSI Standard Z21.69/CSA 6.16 as gas utilization equipment that may be mounted on casters or otherwise be subject to movement.

SwivelMAX

- Reduces stress on connector
- Increases kitchen aisle space by allowing connector to be positioned closer to the wall

SnapFast

- One-handed quick-disconnect fitting
- Thermal shut-off when internal temperature exceeds 350°F (177°C)

Restraining Device

- ANSI Z21.69 Standard section 1.7.4 states: Connectors when used on caster-mounted equipment shall be installed with a restraining device, which prevents transmission of the strain to the connector

We guarantee our commercial gas connectors for the life of the original appliance to which it is connected.

Dormont®

A Watts Water Technologies Company

ISO 9001-2008 CERTIFIED

USA: Export, PA • Tel. (724) 733-4800 • Fax: (724) 733-4808 • www.dormont.com

GARLAND

Master Gas Convection Oven EasyTouch™ Screen Control

Project _____

Item _____

Quantity _____

CSI Section 11400

Approved _____

Date _____

Models

- MCO-GS-10M
- MCO-GS-20M
- MCO-GD-10M
- MCO-GD-20M

Model MCO-GS-10M
Shown with optional casters

Standard Features

- EasyTouch™ screen design with simple on/off switch and intuitive Press and Go interface
- Master 4.3" Controller with 150°F (66°C) to 500° (260°C) temperature range
- Cook'n'Hold
- Direct spark with 100% safety shut off
- 2-speed fan control (high & low) with .6 HP fan motor
- Total of 60,000 BTU (17.6 kW) loading per oven cavity
- Natural or propane gas
- Stainless steel front, sides, top, and legs
- 60/40 dependent door design with double pane thermal window in both doors and interior lighting
- Full Length, stainless steel positive door closure
- Patented "Safety Door System"
- Porcelain enameled oven interior with coved corners
- 24" cooking cavity height w/6 chrome plated oven racks on 13-position rack guides
- Double deck models available, suffix -20M
- Deep depth models available, prefix MCO-GD

Warranty

- 2 year limited part & 1 year labor warranty (USA & Canada only)
- 2 year limited part & labor waranty (USA Kindergarden to grade 12 schools only)
- 5 year limited door warranty, excluding window (USA & Canada only)

Options & Accessories

- 80,000 BTU (23.4kW) burner package (natural gas)
- Stainless steel solid door or doors (specify) – No Charge
- Removable stainless steel drip pan
- Deck Fasteners
- Extra oven racks
- Swivel casters, (4) w/front brakes
- 4 Low profile casters, w/front brakes (double ovens only)
- Stainless steel open base with rack guides and shelf
- Direct connect vent
- Back enclosure (stainless steel)
- 3/4" gas flex hose & quick disconnect
- 208 or 240 volt, single phase motor (please specify)
- 50 cycle components
- Maximum security package available contact factory for details

Specifications

- Garland Master Full-Size Standard Depth, prefix MCO-GS or Deep Depth, prefix MCO-GD, gas convection oven.
- 60,000 BTU (17.6 kW)/cavity, .6 HP fan motor with two speed fan control. Electronic spark ignition. Natural or propane gas.
- EasyTouch™ screen.
- Porcelain enameled oven interior with coved corners, Six (6) oven racks and 13-position rack guides.
- All model interiors are 29" (736mm) W by 24" (610mm) H, depth is 24" (610mm) for standard depth and 28" (711mm) for deep depth. Stainless steel front, sides, top, and legs. 60/40 dependent door design with double pane thermal window in both doors and interior lighting.
- Models with suffix -20M are double deck units. Specify voltage if other than 115 volt, 60 Hz, 1 phase.
- UL, CUL Gas-Fired and NSF Listed.

GAS-FIRED UL LISTED
GAS-FIRED C UL LISTED
NSF

Master Gas Convection Oven EasyTouch™ Screen Control

Garland Commercial Ranges Ltd.
1177 Kamato Road,
Mississauga, Ontario
L4W 1X4 CANADA

General Inquires 1-905-624-0260
USA Sales, Parts and Service 1-800-424-2411
Canadian Sales 1-888-442-7526
Canada or USA Parts/Service 1-800-427-6668

www.garland-group.com
7819A
11/20

WELBILT

GARLAND

Master Gas Convection Oven EasyTouch™ Screen Control

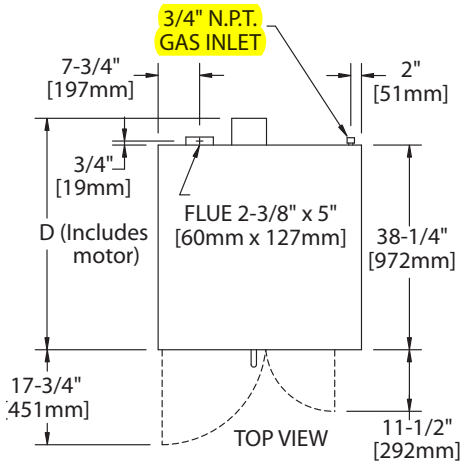

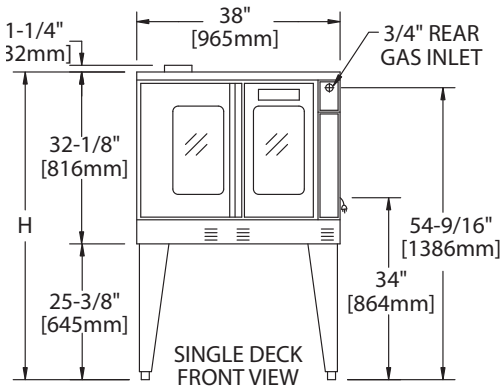

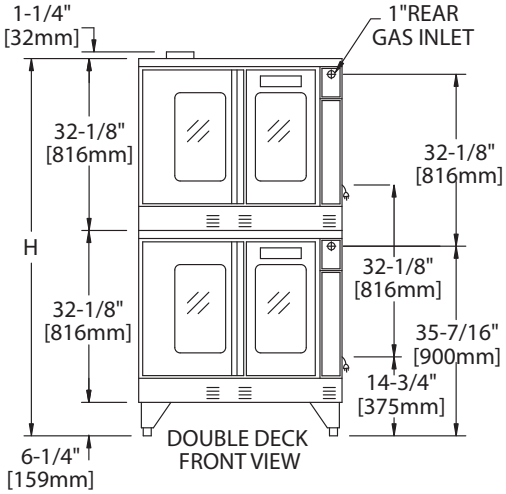

Gas Input Ratings shown here are for installations up to 2,000 ft. (610m) above sea level. Specify altitudes over 2,000 ft. Please specify- gas type when ordering.

INSTALLATION NOTE:

Combustible Wall Clearances:
Sides: 1" (25mm) Back: 3" (76mm)

***Note:** Installations beside units with high heat sources it is recommended to leave 6" (152mm) on the right side of oven. Refer to the installation manual for more details.

Combustible Wall Clearances:
Crated:47" (1194mm) Uncrated: 32½" (826mm)

Manifold Operating Pressure:
Natural: 4.5" WC (11 mbar) Propane: 10" WC (25 mbar) Max 13.8" WC @ 70°F

Note: Data applies only to North America

PLEASE NOTE:

Standard electrical specifications include motor requirements
(120V units) 115V, .6 HP, 2-speed motor; 1430 and 1670 rpm,
(240V units) 200-240V, .6 HP, 2-speed motor; 1430 and 1670 rpm, 60 Hz.
A 6 ft. line cord is provided for each 120V deck with a (NEMA#5-15P) plug.

SINGLE-DECK MODELS	INT. DIMENSIONS: In mm			EXT. DIMENSIONS: In mm			SHIP WT.	SHIP DIM.
	W	H	D	W	H *	D	lbs/kg	cubic Ft.
Standard Depth	29 (736)	24 (610)	24 (610)	38 (965)	57-1/2 (1461)	41-1/4(1048)	515/230	64
Deep Depth	29 (736)	24 (610)	28 (711)	38 (965)	57-1/2 (1461)	44-1/2(1130)	545/245	64

DOUBLE-DECK MODELS	INT. DIMENSIONS: In mm			EXT. DIMENSIONS In mm			SHIP WT.	SHIP DIM.
	W	H	D	W	H *	D	2@lbs/kg	Cubic Ft.
Standard Depth	29 (736)	24 (610)	24 (610)	38 (965)	70-1/2 (1791)	41-1/4(1048)	1030/465	128
Deep Depth	29 (736)	24 (610)	28 (711)	38 (965)	70-1/2 (1791)	44-1/2(1130)	1090/490	128

*Height with or without standard casters. Height with low profile casters (double deck) is 68-1/2" (1740mm).

MODELS	INPUT RATINGS, NAT & PRO			ELECTRICAL SPECIFICATIONS	
	BTU/hr	kW Eqiv.	Gas inlet	120V/1Ph.	240V/1Ph.
Single Deck	60,000	17.6	(1)@3/4" NPT	(1)@9.8A	(1)@5.2A
Double Deck	120,000	35.2	(1)@1" NPT	(2)@9.8A	(2)@5.2A

Welbilt reserves the right to make changes to the design or specifications without prior notice.

Garland Commercial Ranges Ltd.
1177 Kamato Road,
Mississauga, Ontario
L4W 1X4 CANADA

General Inquires 1-905-624-0260
USA Sales, Parts and Service 1-800-424-2411
Canadian Sales 1-888-442-7526
Canada or USA Parts/Service 1-800-427-6668

www.garland-group.com

7819A
11/20

WELBILT

Job Name _____
Job Location _____
Engineer _____
Approval _____

Contractor _____
Approval _____
Contractor's P.O. No. _____
Representative _____
SKU _____

Double Swivel MAX® /SnapFast® Quick-Disconnect Assemblies

Sizes: ½" to 1¼" (15 to 32mm)

Double Swivel MAX/SnapFast Quick-Disconnect Assemblies feature flexible movement and the one-handed quick-disconnect fitting with a unique thermal shut-off design that automatically shuts off the gas when the internal temperature exceeds 350°F (177°C). The 360° movement of Swivel MAX at both ends gives maximum protection to the life of the connector and greatly increases kitchen aisle space by allowing the appliance to be closer to the wall.

Features

Swivel MAX®

Multi-plane Fitting	Aluminum body, plated steel fitting
Movement	360° rotational end fitting

SnapFast® One-Handed Quick-Disconnect

Quick-Disconnect	Brass body, aluminum collar
Thermal Shut-off	Shuts off gas when internal temperatures exceed 350°F (177°C)

Specifications

The Dormont Blue Hose®

Tubing	Annealed, 304 stainless steel
Braiding	Multi-strand, stainless steel wire
Coating	Blue antimicrobial PVC, melts at 350°F (177°C), coating will not hold a flame
End Fittings	Carbon steel; zinc trivalent chromate
Stress Guard®	360° rotational end fitting at both ends

Additional Components

Restraining Device	PVC coated, steel multi-strand cable and mounting hardware
Valve	Full port, brass body

Approvals & Certifications

NSF/ANSI 169 – Special-purpose food equipment and devices
ANSI Z21.69 / CSA 6.16 – Connectors for moveable gas appliances
ANSI Z21.41 / CSA 6.9 – Quick-Disconnect Devices for use with gas fuel appliances
ANSI Z21.15 / CSA 9.1 – Manually operated gas valves for appliances, appliance connectors
UL 567 _ Pipe connectors for flammible and combustible liquids and LP gas
Meets requirements of ANSI Z223.1 / NFPA 54 National Fuel Gas Code
Not for use in temperatures less than 32°F (0°C). For indoor use only.
Max operating pressure 1/2 psi.
Refer to the catalog for additional approvals and certifications or go to www.dormont.com.
A restraining device is required for all moveable gas equipment.

Safety System™ The Dormont Safety System™ is the first and only complete gas equipment connection system specifically engineered for the commercial kitchen. The Safety System consists of the famous Dormont Blue Hose and a variety of accessories designed for improved safety and performance in commercial kitchens. Because they are manufactured in the USA under an ISO qualified production process and to multiple design certifications, you can Connect with Confidence with the Dormont Safety System.

Dormont®

Double Swivel MAX® with SnapFast® Quick-Disconnect Deluxe Kit Assembly

Ordering Information

		LENGTH				
Configuration	Size I.D.	24" (607mm)	36" (914mm)	48" (1,219mm)	60" (1,524mm)	72" (1,829mm)
Deluxe Kit* Basic Kit** Hose Assembly***	½" (15mm)	1650KIT2S24 1650BPQ2SR24 1650BPQ2S24	1650KIT2S36 1650BPQ2SR36 1650BPQ2S36	1650KIT2S48 1650BPQ2SR48 1650BPQ2S48	1650KIT2S60 1650BPQ2SR60 1650BPQ2S60	1650KIT2S72 1650BPQ2SR72 1650BPQ2S72
Deluxe Kit* Basic Kit** Hose Assembly***	¾" (20mm)	1675KIT2S24 1675BPQ2SR24 1675BPQ2S24	1675KIT2S36 1675BPQ2SR36 1675BPQ2S36	1675KIT2S48 1675BPQ2SR48 1675BPQ2S48	1675KIT2S60 1675BPQ2SR60 1675BPQ2S60	1675KIT2S72 1675BPQ2SR272 1675BPQ2S72
Deluxe Kit* Basic Kit** Hose Assembly***	1" (25mm)	16100KIT2S24 16100BPQ2SR24 16100BPQ2S24	16100KIT2S36 16100BPQ2SR36 16100BPQ2S36	16100KIT2S48 16100BPQ2SR48 16100BPQ2S48	16100KIT2S60 16100BPQ2SR60 16100BPQ2S60	16100KIT2S72 16100BPQ2SR72 16100BPQ2S72
Deluxe Kit* Basic Kit** Hose Assembly***	1¼" (32mm)	16125KIT2S24 16125BPQ2SR24 16125BPQ2S24	16125KIT2S36 16125BPQ2SR36 16125BPQ2S36	16125KIT2S48 16125BPQ2SR48 16125BPQ2S48	16125KIT2S60 16125BPQ2SR60 16125BPQ2S60	16125KIT2S72 16125BPQ2SR72 16125BPQ2S72

BTU/hr Flow Capacity Natural Gas (Flow rating BTU/hr 0.64 SP. GR. @ 0.5 inch WC pressure drop)

		LENGTH				
Model	Size I.D.	24" (607mm)	36" (914mm)	48" (1,219mm)	60" (1,524mm)	72" (1,829mm)
1650BPQ2S	½" (15mm)	77,000	69,000	60,000	54,000	48,000
1675BPQ2S	¾" (20mm)	205,000	193,000	160,000	140,000	124,000
16100BPQ2S	1" (25mm)	366,000	336,000	295,000	261,000	247,000
16125BPQ2S	1¼" (32mm)	472,000	461,000	449,000	441,000	440,000

***Deluxe Kits include:** The Dormont Blue Hose, Double Swivel MAX, SnapFast, restraining device and full port valve
****Basic Kits include:** The Dormont Blue Hose, Double Swivel MAX, SnapFast, and restraining device
*****Hose Assemblies include:** The Dormont Blue Hose, Double Swivel MAX, SnapFast

Typical Installation

The Dormont Blue Hose®

The Dormont Blue Hose is a commercial, moveable-grade gas connector designed for use with moveable equipment.

Moveable equipment is defined in ANSI Standard Z21.69/CSA 6.16 as gas utilization equipment that may be mounted on casters or otherwise be subject to movement.

SwivelMAX

- Reduces stress on connector
- Increases kitchen aisle space by allowing connector to be positioned closer to the wall

SnapFast

- One-handed quick-disconnect fitting
- Thermal shut-off when internal temperature exceeds 350°F (177°C)

Restraining Device

- ANSI Z21.69 Standard section 1.7.4 states: Connectors when used on caster-mounted equipment shall be installed with a restraining device, which prevents transmission of the strain to the connector

We guarantee our commercial gas connectors for the life of the original appliance to which it is connected.

Dormont®

A Watts Water Technologies Company

ISO 9001-2008 CERTIFIED

USA: Export, PA • Tel. (724) 733-4800 • Fax: (724) 733-4808 • www.dormont.com

CLEVELAND

SteamCraft® Ultra 10

TWO COMPARTMENT FLOOR MODEL DESIGN PRESSURELESS CONVECTION STEAMER GAS STEAM GENERATORS, 125M BTU

Project _____
Item _____
Quantity _____
FCSI Section 11400 _____
Approved _____
Date _____

Models

- 24-CGA-10

Shown with optional Electronic Timer

Short Form Specifications

Shall be CLEVELAND, SteamCraft® Ultra 10, two compartments, Floor Model Steamer, Model 24-CGA-10, single, large capacity Gas-fired Atmospheric Steam Generator, 125M BTU input. Remote Probe Type Water Level Controls. Steam Generator with Automatic Water Fill on start up, Automatic Generator Blowdown, Electronic Spark Ignition and Generator Stand-by for instant steam. Choice of Compartment Controls, Manual By Pass Operation Mode, Exclusive Cold Water Condenser design, Type 430 Stainless Steel exterior and cooking compartments.

Standard Features

- Cooking Capacity for up to ten 12″ x 20″ x 21/2″ deep Cafeteria Pans, five each compartment.
- Innovative PowerPak Gas Steam Generator: Unique 125,000 BTU, 80% efficient Vertical Atmospheric Generator Design, only uses 75M BTU when one compartment is used. Strong 14 Gauge Stainless Steel Construction. Large 7.5 gallon generator reservoir for high speed cooking production. Fully insulated rear mounted steam generator.
- Easy Access Cleaning Port: Generator Cleaning Port located on the outside, top of the unit.
- Instant Steam Stand By Mode: Hold generator at a steaming temperature. Allows unit to start cooking instantly.
- Durable 14 Gauge, 304 Stainless Steel Construction: For compartment door, cavity and steam generator.
- Two 60 Minute Electro-Mechanical Timers and Switches for manual operation: Audible signal for cooking time completion. (MCS)
- Main Power On/Off Switch: Automatically fills generator with water, then ignites gas burners via a fully automatic Electronic Spark Ignition (pilotless) to start generator.
- Exclusive Steam Cooking Distribution System: Exclusive Brass Steam Jets produce a high velocity convection steam without fans. Coved Corner design in cooking compartment distributes heat evenly, and is easy to keep clean. Creased top & bottom enhance drainage. Cold Water Condenser for each compartment maintains a dry steam. Fully insulated cooking compartment for thermal efficiency. Removable Stainless Steel Slide Racks.
- Automatic Generator Drain: Contains a “Water Jet” Spray Rinse Drain Cleaning Cycle to keep drain clear.
- Exclusive Automatic Probe for Water Level Control: Separate from the generator for easy access, contains a high velocity rinse cycle to eliminate mineral buildup.
- Exclusive “Cool to the Touch” Two-Piece Compartment Door Design: Free floating inner door with reversible gasket provides an air tight seal. Stainless Steel Slam/Latch Door Latch mechanism for reliability.
- Condensate Drip Trough: Provide under lower compartment door to collect condensate.
- Left Hand Door Hinging: Compartment Doors hinged on the left, controls on the right.
- NSF Certified 6″ Stainless Steel Legs with adjustable flanged feet for a one inch level adjustment.
- SCS Steam Cut off switch standard.

Options & Accessories

- Right hand Door Hinging, Controls on the Right (DHR)
- Electronic Timer with Compensating Load Feature (ETC)
- Dissolve® liquid descaling kit. USDA and FDA approved (10617413)
- Cafeteria Pans in depths of 1″, 21/2″ and 4″
- Propane Gas (PG)

18301 St. Clair Street
Cleveland, OH 44110

Tel 1.888.417.5462
Fax 1.800.285.9511
Email info@clevelandrange.com

www.clevelandrange.com

WELBILT

CLEVELAND

SteamCraft® Generator Style High Speed Convection Steamers

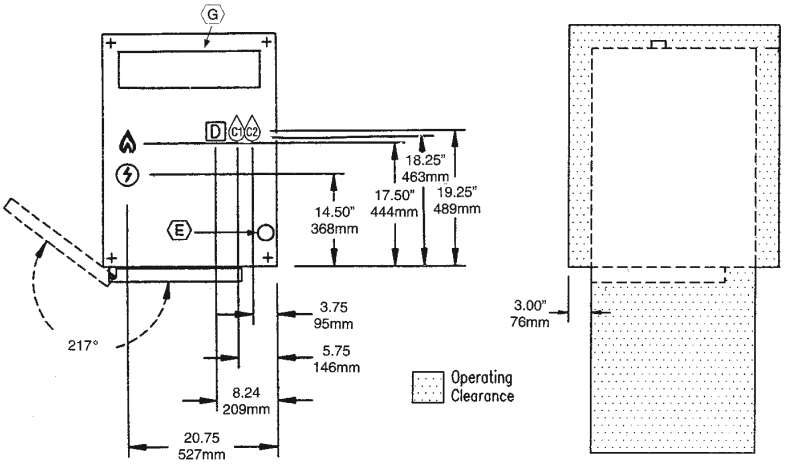

COMPARTMENT HAS CAPACITY FOR:

- Five, 12˝ x 20˝ x 21/2˝ deep Cafeteria Pans

WATER QUALITY REQUIREMENTS (Boilers, Generators)

TTDS:	50-250 ppm
Hardness:	50 - 200 mm (3 - 12 gpg)
pH value:	7.0 - 8.5
CL (Chloride):	max 50 ppm
Cl2 (free chlorine):	max 0.1 ppm
SiO2 (silica):	max 13 ppm
NH2Cl: (mono-chloramine)	max 0.1 ppm
Total Alkalinity:	50 - 100 ppm
Water Pressure	35 - 80 PSI
Temperature:	max 104ºF

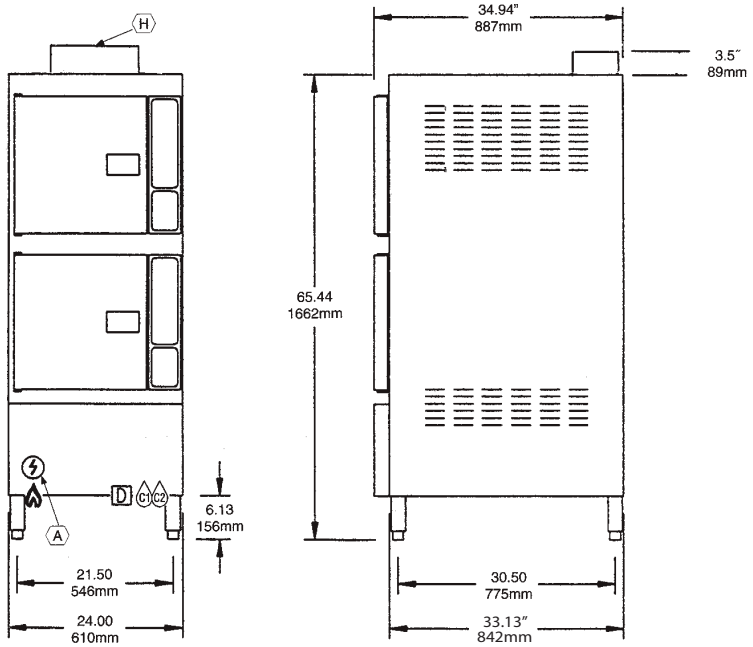

SHIPPING WEIGHTS & DIMENSIONS

Weight	Width	Depth	Height
540 lbs	49"	41"	78"

TOTAL CAPACITY (2 Compartments)	UTILITY CONNECTIONS
10 — 12˝ x 20˝ x 2½˝ Cafeteria Pans or 20 — 12˝ x 20˝ x 1˝ Cafeteria Pans or 6 — 12˝ x 20˝ x 4˝ Cafeteria Pans	(A) Electrical Supply (B) Cold Water Supply for Condenser 3/8˝ Dia. NPT (C) Cold Water Supply for Generator and Water Injection. 3/8˝ Dia. NPT (for water treatment conn.) Unit comes with a 50 Mesh Water Strainer (installation required) (D) Drain: 1.50˝ Dia. (E) Inlet for Generator Deliming Solution (F) Gas Supply .75˝ Dia. (G) Flue Gas Exhaust from Boiler (H) Flue Diverter (if required)

GAS	ELECTRIC	COLD WATER	DRAINAGE	CLEARANCE
75,000 BTU - 1 Compartment, 125,000 BTU - 2 Compartments SUPPLY PRESSURE NATURAL: 4.00˝ W.C. minimum, 14.00˝ W.C. maximum PROPANE: 12.00˝ W.C. minimum, 14.00˝ W.C. maximum Manufacturer must be notified if unit will be used above 2,000 ft. altitude.	1 Fan & Controls, 1 Phase Volts 120, Watts 200, Amps 2.0, Wire 2 ** Do not connect to GFI outlet. See note below.	35 psi minimum 60 psi maximum (C1) 3/8˝ Dia. NPT for Generator (for water treatment connection) (C2) 3/8˝ Dia. NPT for Condenser	1½˝ dia. Do not connect other units to this drain Drain must not be located beneath the steamer itself. Preferred floor drain location should be a minimum distance (from the unit) of at least 12˝ from the left side, 12˝ from the right side, 6˝ from the front and 6˝ from the rear Do not use PVC pipe	Right - 3˝, Left - 3˝, Rear - 3˝ (12˝ on control side if adjoining wall or equipment is over 30˝ high for service access) **Contact factory for variances to clearances.**

NOTES:

**DO NOT CONNECT TO GFI OUTLET. CLEVELAND RANGE RECOMENTS GAS FIRED 120 VOLT STEAMERS BE HARD WIRED DIRECTLY TO ELECTRICAL SYSTEM.
Cleveland Range reserves right of design improvement or modification, as warranted.
Many regional, state and local codes exist and it is the responsibility of the owner and installer to comply with the codes.
Cleveland Range equipment is built to comply with applicable standards for manufacturers. Included among those approval agencies are U.L/NSF#4 and CSA (AGA, CGA).

(NOT TO SCALE)

Job Name _____
Job Location _____
Engineer _____
Approval _____

Contractor _____
Approval _____
Contractor's P.O. No. _____
Representative _____
SKU _____

Double Swivel MAX® /SnapFast® Quick-Disconnect Assemblies

Sizes: ½" to 1¼" (15 to 32mm)

Double Swivel MAX/SnapFast Quick-Disconnect Assemblies feature flexible movement and the one-handed quick-disconnect fitting with a unique thermal shut-off design that automatically shuts off the gas when the internal temperature exceeds 350°F (177°C). The 360° movement of Swivel MAX at both ends gives maximum protection to the life of the connector and greatly increases kitchen aisle space by allowing the appliance to be closer to the wall.

Features

Swivel MAX®

Multi-plane Fitting	Aluminum body, plated steel fitting
Movement	360° rotational end fitting

SnapFast® One-Handed Quick-Disconnect

Quick-Disconnect	Brass body, aluminum collar
Thermal Shut-off	Shuts off gas when internal temperatures exceed 350°F (177°C)

Specifications

The Dormont Blue Hose®

Tubing	Annealed, 304 stainless steel
Braiding	Multi-strand, stainless steel wire
Coating	Blue antimicrobial PVC, melts at 350°F (177°C), coating will not hold a flame
End Fittings	Carbon steel; zinc trivalent chromate
Stress Guard®	360° rotational end fitting at both ends

Additional Components

Restraining Device	PVC coated, steel multi-strand cable and mounting hardware
Valve	Full port, brass body

Approvals & Certifications

NSF/ANSI 169 – Special-purpose food equipment and devices
ANSI Z21.69 / CSA 6.16 – Connectors for moveable gas appliances
ANSI Z21.41 / CSA 6.9 – Quick-Disconnect Devices for use with gas fuel appliances
ANSI Z21.15 / CSA 9.1 – Manually operated gas valves for appliances, appliance connectors
UL 567 _ Pipe connectors for flammible and combustible liquids and LP gas
Meets requirements of ANSI Z223.1 / NFPA 54 National Fuel Gas Code
Not for use in temperatures less than 32°F (0°C). For indoor use only.
Max operating pressure 1/2 psi.
Refer to the catalog for additional approvals and certifications or go to www.dormont.com.
A restraining device is required for all moveable gas equipment.

Safety System™ The Dormont Safety System™ is the first and only complete gas equipment connection system specifically engineered for the commercial kitchen. The Safety System consists of the famous Dormont Blue Hose and a variety of accessories designed for improved safety and performance in commercial kitchens. Because they are manufactured in the USA under an ISO qualified production process and to multiple design certifications, you can Connect with Confidence with the Dormont Safety System.

Dormont®

Double Swivel MAX® with SnapFast® Quick-Disconnect Deluxe Kit Assembly

Ordering Information

		LENGTH				
Configuration	Size I.D.	24" (607mm)	36" (914mm)	48" (1,219mm)	60" (1,524mm)	72" (1,829mm)
Deluxe Kit* Basic Kit** Hose Assembly***	½" (15mm)	1650KIT2S24 1650BPQ2SR24 1650BPQ2S24	1650KIT2S36 1650BPQ2SR36 1650BPQ2S36	1650KIT2S48 1650BPQ2SR48 1650BPQ2S48	1650KIT2S60 1650BPQ2SR60 1650BPQ2S60	1650KIT2S72 1650BPQ2SR72 1650BPQ2S72
Deluxe Kit* Basic Kit** Hose Assembly***	¾" (20mm)	1675KIT2S24 1675BPQ2SR24 1675BPQ2S24	1675KIT2S36 1675BPQ2SR36 1675BPQ2S36	1675KIT2S48 1675BPQ2SR48 1675BPQ2S48	1675KIT2S60 1675BPQ2SR60 1675BPQ2S60	1675KIT2S72 1675BPQ2SR272 1675BPQ2S72
Deluxe Kit* Basic Kit** Hose Assembly***	1" (25mm)	16100KIT2S24 16100BPQ2SR24 16100BPQ2S24	16100KIT2S36 16100BPQ2SR36 16100BPQ2S36	16100KIT2S48 16100BPQ2SR48 16100BPQ2S48	16100KIT2S60 16100BPQ2SR60 16100BPQ2S60	16100KIT2S72 16100BPQ2SR72 16100BPQ2S72
Deluxe Kit* Basic Kit** Hose Assembly***	1¼" (32mm)	16125KIT2S24 16125BPQ2SR24 16125BPQ2S24	16125KIT2S36 16125BPQ2SR36 16125BPQ2S36	16125KIT2S48 16125BPQ2SR48 16125BPQ2S48	16125KIT2S60 16125BPQ2SR60 16125BPQ2S60	16125KIT2S72 16125BPQ2SR72 16125BPQ2S72

BTU/hr Flow Capacity Natural Gas (Flow rating BTU/hr 0.64 SP. GR. @ 0.5 inch WC pressure drop)

		LENGTH				
Model	Size I.D.	24" (607mm)	36" (914mm)	48" (1,219mm)	60" (1,524mm)	72" (1,829mm)
1650BPQ2S	½" (15mm)	77,000	69,000	60,000	54,000	48,000
1675BPQ2S	¾" (20mm)	205,000	193,000	160,000	140,000	124,000
16100BPQ2S	1" (25mm)	366,000	336,000	295,000	261,000	247,000
16125BPQ2S	1¼" (32mm)	472,000	461,000	449,000	441,000	440,000

***Deluxe Kits include:** The Dormont Blue Hose, Double Swivel MAX, SnapFast, restraining device and full port valve
****Basic Kits include:** The Dormont Blue Hose, Double Swivel MAX, SnapFast, and restraining device
*****Hose Assemblies include:** The Dormont Blue Hose, Double Swivel MAX, SnapFast

Typical Installation

The Dormont Blue Hose®

The Dormont Blue Hose is a commercial, moveable-grade gas connector designed for use with moveable equipment.

Moveable equipment is defined in ANSI Standard Z21.69/CSA 6.16 as gas utilization equipment that may be mounted on casters or otherwise be subject to movement.

SwivelMAX

- Reduces stress on connector
- Increases kitchen aisle space by allowing connector to be positioned closer to the wall

SnapFast

- One-handed quick-disconnect fitting
- Thermal shut-off when internal temperature exceeds 350°F (177°C)

Restraining Device

- ANSI Z21.69 Standard section 1.7.4 states: Connectors when used on caster-mounted equipment shall be installed with a restraining device, which prevents transmission of the strain to the connector

We guarantee our commercial gas connectors for the life of the original appliance to which it is connected.

Dormont®

A Watts Water Technologies Company

ISO 9001-2008 CERTIFIED

USA: Export, PA • Tel. (724) 733-4800 • Fax: (724) 733-4808 • www.dormont.com

Water Connector

Related Information

Applications:

- Utility distribution systems
- Steam kettles
- Steamtables
- Combi-ovens

Product Information

Dormont Hi-PSI® Flex connectors provide long, trouble-free service life and permit quick, safe connection of hot and cold water service lines and steam lines to all types of moveable/castered and stationary foodservice equipment. Antimicrobial Coating

Diameter: ½", ¾" 1"
Length: 24", 26", 48" 60", 72"
Options: 2-Way Shut-Off Water QD can also be purchased for these connectors

EV9797-22

Kleensteam II Twin System

Everpure's second generation of total water treatment system for steam applications

Kleensteam II Twin System: EV9797-22

7CB5 Replacement Cartridge: EV9618-11

SS-10 Cartridge: EV9799-02

BENEFITS

A total system delivering high quality filtered water with scale inhibition and deliming capabilities

New dual cartridge design provides enhanced performance for low or high flow capacity steamers

Fine filters incoming water to improve the performance, maximize energy efficiency and increase the life of steam equipment

Reduces chlorine-induced corrosion

System is simple to install, operate and maintain

Easy deliming with Everpure's ScaleKleen, which is fed directly into the boiler through the SR-X bowl without use of hazardous chemicals or special piping

Long lasting SS-10 cartridge is more effective in higher alkalinty/hardness/TDS/temperature installations.

Sophisticated Hydroblend compound prevents limescale formation in high temperature steam applications

INSTALLATION TIPS

Choose a mounting location suitable to support the full weight of the system when operating

Use minimum 1/2" inlet water line (3/4" preferred)

Connect the system to the boiler feed water line only! Do not connect to the condenser water line!

Install vertically with cartridges hanging down

Allow 2-1/2" clearance below the cartridge for easy cartridge replacement

Flush cartridges by running water through filter for five minutes at full flow

OPERATION TIPS

Change 7CB5 cartridge on a regular 6 month preventative maintenance program, when capacity is reached or when pressure falls below 10 psi

Change SS-10 cartridge before Hydroblend™ compound is completely used up

Service flow rate must not exceed 2.5 gpm for single cartridge systems or 5.0 for dual cartridge systems

Always flush the filter cartridge at time of installation and cartridge change

Use for periodic deliming as needed by installing the dip tube assembly in place of the SS-10 and dissolving Scale Kleen in SR-X housing. Full deliming instructions are provided with the system

APPLICATION/SIZING

For commercial steam applications

For use with foodservice steamer and combi-oven applications

The Kleensteam II Twin System is shipped with two 7CB5 cartridges and no filter head plug

Kleensteam II Twin System

SPECIFICATIONS

Overall Dimensions:
25.5"H x 20.5"W x 7"D

Inlet connection: 3/4" FNPT

Outlet connection: 3/4" FNPT

Service Flow Rate:
Maximum 5.0 gpm (18.9 Lpm) - twin cartridges

Pressure Requirements:
10 - 125 psi (0.7 – 8.6 bar), non-shock

Maximum water temperature at inlet:
100°F (38°C)

Alkalinity range:
2 to 12 grains per gallon

No electrical connection required

Shipping Weight: 28 lbs.

Operating Weight: 35 lbs.

The contaminants or other substances removed or reduced by this drinking water system are not necessarily in your water. Do not use with water that is microbiologically unsafe or of unknown quality without adequate disinfection before or after the system. Systems certified for cyst reduction may be used with disinfected water that may contain filterable cysts.

ScaleStick is NSF Certified under NSF/ANSI Standard 42 for materials

KleenSteam II - Twin Cartridge

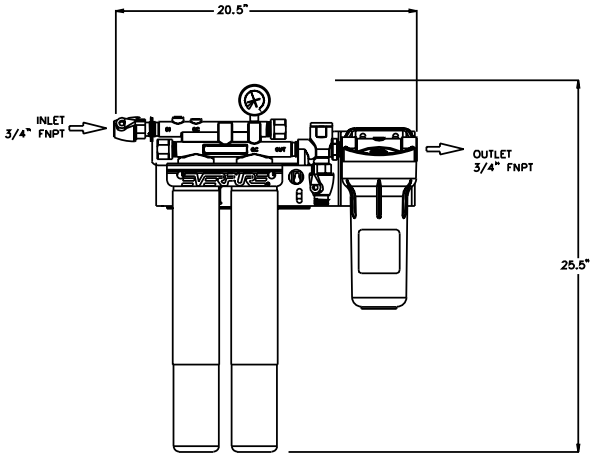

WARRANTY

Everpure water treatment systems (excluding replaceable elements) are covered by a limited warranty against defects in material and workmanship for a period of five years after date of purchase. Everpure replaceable elements (filter cartridges and water treatment cartridges) are covered by a limited warranty against defects in material and workmanship for a period of one year after date of purchase. See printed warranty for details. Everpure will provide a copy of the warranty upon request.

EVERPURE®

EVERPURE, LLC
1040 Muirfield Drive
Hanover Park, Illinois 60133
Toll Free (800) 323-7873
Tel (630) 307-3000
Fax (630) 307-3030
http://www.everpure.com

In Europe:
N.V. EVERPURE (EUROPE) S.A.
Industriepark Wolfstee
Toekomstlaan 30
B-2200 Herentals
Belgium
Tel 32 -14-283500
Fax 32-14-283505

In Japan:
EVERPURE JAPAN LLC
Hashimoto MN Bldg. 7F
3-25-1 Hashimoto Sagamihara-Shi
Kanagawa 229-1103
Japan
Tel 81-(0)42-775-3011
Fax 81-(0)42-775-3015

Everpure, LLC
1040 Muirfield Drive
Hanover Park, IL 60133
Ph: 630-307-3000 Fax: 630-307-3030

Lincoln

1100 Series Impinger® II Conveyorized Oven

Models

- ☐ 1116-xxx-U
- ☐ 1117-xxx-U
- ☐ 1130-xxx-U
- ☐ 1131-xxx-U
- ☐ 1132-xxx-U
- ☐ 1133-xxx-U
- ☐ 1134-xxx-N
- ☐ 1135-xxx-N
- ☐ 1151-xxx-N
- ☐ 1154-xxx-E
- ☐ 1155-xxx-E
- ☐ 1157-xxx-N
- ☐ 1158-xxx-N
- ☐ 1164-xxx-E

Lincoln *Impinger* Conveyor Ovens are the premier continuous cook platform for the food service industry. Using the latest advancements in air impingement technology, *Impinger* ovens allow for rapid heating, cooking, baking, and crisping of foods, typically done two to four times faster than conventional ovens.

Lincoln IMPINGER® FASTBAKE

Benefits

Faster Bake Times

- Improved Response to Customer
- Optional FastBake Technology Reduces Cook Time by Up to An Additional 35% With No Food Quality Loss or Noise Increase

Easier Operation

- Digital Controls with Single On/Off Switch
- Microprocessor Controlled Bake Time/Conveyor Speed
- Locked Setting to Prevent Unintended Changes
- Fluorescent Display Indicating Temperature, Belt Speed, Thermostat, and Diagnostic Messages

Easier Cleaning

- Front Load Conveyor
- Removable Door

Unparalleled Support

- Customer-specific Finger Setup for Menu Flexibility
- Research and Applications Team Help Achieve Ideal Cooking Results
- Manitowoc Star Service Committed to Owner Satisfaction

Specifications

General

Stainless Steel Top, Front and Sides
28" (711mm) Long Baking Chamber
Front Removable Fingers
Stackable Up To Three High
Includes Oven Start-Up/Check-Out by Manitowoc STAR Authorized Service Agent

Conveyor

18" (457mm) Wide
Front Removable
Product Stop
One to Thirty Minute Cook Time
Reversible

Cooking

Customer Specific Finger Setup
Temperature Range 250°F to 575°F (121°C to 302°C)
Front Loading Glass Access Door with Cool to the Touch Handle
Digital Controls

Optional

FastBake Technology Reduces Cook Time by Up to An Additional 35% With No Food Quality Loss or Noise Increase
Entry and Exit Shelves
Flexible Gas Connector
Split Belt

18301 St. Clair Street
Cleveland, OH 44110

Tel: 888-417-5462
Fax: 800-285-9511
E mail: info@lincolnfp.com

www.lincolnfp.com
LIN_5877 8/20/15

Manitowoc

Lincoln

Gas Supply Pressure Recommendations

Gas Type	Supply (Inlet) Pressure (mbar)	Recommended Minimum Gas Pipe Size
Natural	7-12" WC (1.7 kPA / 17.4 mbar - 2.9 kPa / 29.9 mbar)	1½" (38 mm)
LP	11-12" WC (2.7 kPa / 27.36 mbar - 2.9kPa / 29.9 mbar)	1½" (38 mm)

*Gas supply pressures are dependent on local gas type and on all applicable local codes. Agency approved flexible connection to each oven must be minimum ¾" (19 mm) NPT and length must not exceed six (6) feet (1829 mm).

Electrical Service

Each oven deck requires voltage, phase and hertz as indicated by model number. Neutral must be grounded at electrical service and receptacle properly polarized. Gas 120V units have a cord with NEMA 5-15 plug. All other models have terminal block connections. It is recommended that a separate circuit breaker be provided for each oven deck.

Recommended Minimum Clearances

Rear of oven to Combustible Surface: 6" (152mm). Additional clearance on right hand side from other cooking equipment: 24" (610mm). The conveyor is removable from the front.

Warranty

All new *Impinger* ovens installed in the United States and Canada come with a one (1) year parts and labor warranty starting from the date of start-up/check-out. All ovens installed in locations other than in the US and Canada are warranted for one (1) year parts and ninety (90) days labor starting from the date of start-up/check-out. Start-up must occur within 24 months of date of manufacture.

General Information

All 1100 Models	Length	Depth	Height Single	Height Double Stacked	Height Triple Stacked
	56" (1422 mm)	39" (991 mm)	42" (1067 mm)	59½" (1511 mm)	62" (1575 mm)

Model Number	Agency	Utility	Input Rate	Voltage	Amps	Hertz	Phase	Supply Wires
1116-xxx-U	UL EPH/CSA	Natural	40,000 BTU/Hr. 11.7 kW/42.2 MJ	120	7	60	1	3, 1 Pole+N+G
1154-xxx-E	AGA/UL EPH/CE	Natural		230	2	50	1	3, 1 Pole+N+G
1157-xxx-N	UL EPH	Natural		220		60	1	3, 2 Pole+G
1117-xxx-U	UL EPH/CSA	LP		120	7	60	1	3, 1 Pole+N+G
1155-xxx-E	AGA/UL EPH/CE	LP		230	2	50	1	3, 2 Pole+G
1158-xxx-N	UL EPH	LP		220		60	1	3, 2 Pole+G
1130-xxx-U	UL EPH/UL/cUL	Electric	10 kW	120/208	48	60	1	3, 2 Pole+G
1131-xxx-U	UL EPH/UL/cUL	Electric		120/240	42	60	1	3, 2 Pole+G
1132-xxx-U	UL EPH/UL/cUL	Electric		208	28	60	3	4, 3 Pole+G
1133-xxx-U	UL EPH/UL/cUL	Electric		240	25	60	3	4, 3 Pole+G
1134-xxx-N	UL EPH	Electric		380/208		50	3	5, 3 Pole+N+G
1135-xxx-U	UL	Electric		480	15	60	3	4, 3 Pole+G
1151-xxx-N	UL EPH	Electric		200	29	50/60	3	4, 3 Pole+G
1164-xxx-E	CE/UL EPH	Electric		400/230	15	50	3	5, 3 Pole+N+G

NOTE: Panel setups are added as kit numbers to the end of the model number to complete the oven order
(Ex. 1116-000-U-K1837 is a 1116-000-U with Standard setup, Left to Right)

Lincoln

1100 Series Impinger® II Conveyorized Oven

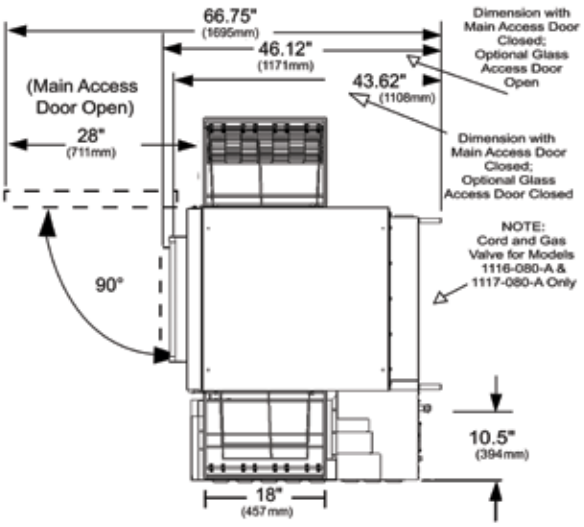

Conveyor Opening: 3" (76.2 mm)

Optional Split Belt (50/50):

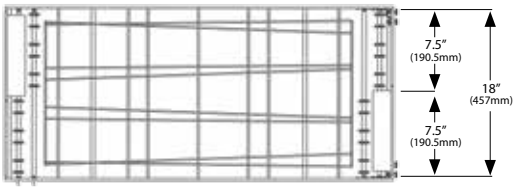

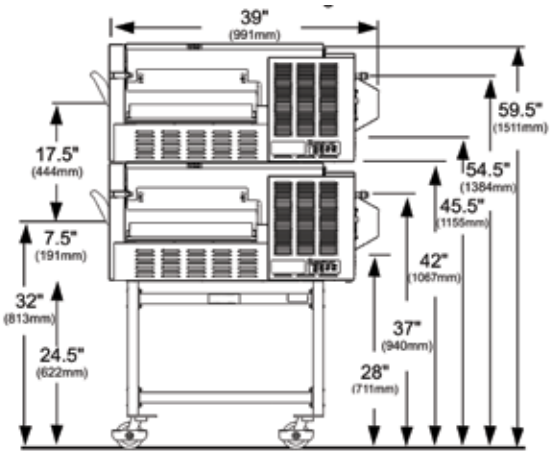

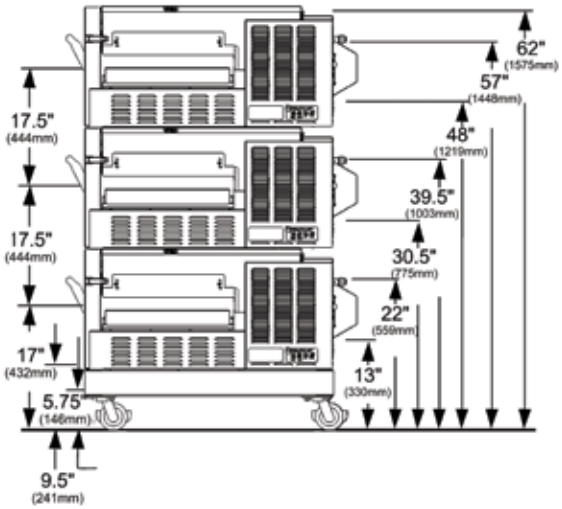

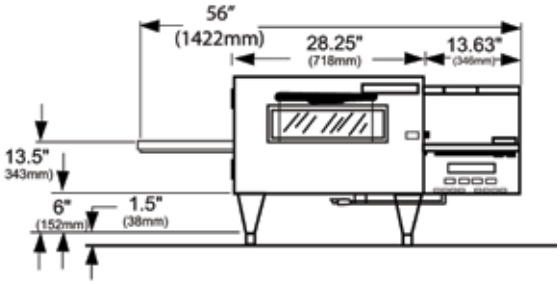

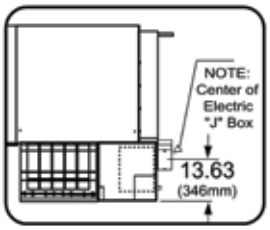

Electric Models

NOTE: Specifications subject to change without notification.

Lincoln

Capacity Estimates | Pies Per Hour

	BAKE TIME								
Pie Size	**3 min.**	**3½ min.**	**4 min.**	**4½ min.**	**5 min.**	**5½ min.**	**6 min.**	**6½ min.**	**7 min.**
12" (30 cm)	53	46	40	35	32	29	26	25	23
14" (36 cm)	41	35	31	27	25	23	21	19	18
16" (41 cm)	35	30	26	24	21	19	18	16	15

Ventilation Requirements

Ventilation is required on all gas ovens. Ventilation is not required on electric models except when triple stacked. Local codes prevail. These are the "authority having jurisdiction" as stated by the National Fire Protection Association, Inc. in NFPA 96-1994. Estimates of CFM requirements can vary from 400 to as high as 2800 CFM exhaust. In all cases, the ambient temperature around the oven must not exceed 95°F (35°C) when the oven is operating. **In the case where a gas single or double stack oven is installed, the following information can be used as a guideline for ventilation.**

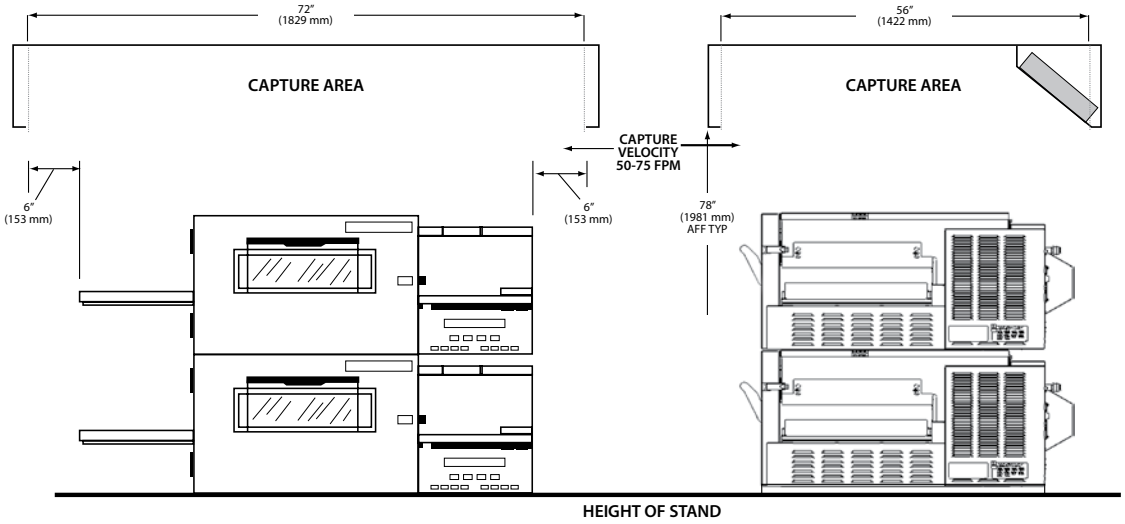

1. Double Stack: Range of 800-1200 cfm for double gas 1100 series oven.
   Single Stack: Range of 450-800 cfm for single gas 1100 series oven.
2. The capture velocity across the apron of canopy is to be 50-75 FPM at sides and front.
3. Double Stack: Width should be 72" (1828 mm) - inside dimensions. Depth should be 50" (1270 mm) - inside front to filters.
   Single Stack: Width should be 48" (1219 mm) - inside dimension. Depth should be 50" (1270 mm) - inside front to filters.
4. The ovens are to be centered in the canopy space left-to-right and front-to-back if possible.
5. Room air diffusers must not be directed onto the oven and should be positioned a minimum of 3 feet from the perimeter of the hood to keep them from affecting the oven.
6. Bottom of canopy should be 78" (1981 mm) above finished floor (AFF).
7. Recommend 70% make-up air provided outside of the canopy through perf metal diffusers directed straight down... not at the oven; located at front, sides or both.
8. Use of a Type I or Type II application and overall final installation is determined per local codes.

NOTE: Specifications subject to change without notification.

18301 St. Clair Street
Cleveland, OH 44110

Tel: 888-417-5462
Fax: 800-285-9511
E mail: info@lincolnfp.com

www.lincolnfp.com
LIN_5877 8/20/15

Manitowoc

Job Name _____
Job Location _____
Engineer _____
Approval _____

Contractor _____
Approval _____
Contractor's P.O. No. _____
Representative _____
SKU _____

Double Swivel MAX® /SnapFast® Quick-Disconnect Assemblies

Sizes: ½" to 1¼" (15 to 32mm)

Double Swivel MAX/SnapFast Quick-Disconnect Assemblies feature flexible movement and the one-handed quick-disconnect fitting with a unique thermal shut-off design that automatically shuts off the gas when the internal temperature exceeds 350°F (177°C). The 360° movement of Swivel MAX at both ends gives maximum protection to the life of the connector and greatly increases kitchen aisle space by allowing the appliance to be closer to the wall.

Features

Swivel MAX®

Multi-plane Fitting	Aluminum body, plated steel fitting
Movement	360° rotational end fitting

SnapFast® One-Handed Quick-Disconnect

Quick-Disconnect	Brass body, aluminum collar
Thermal Shut-off	Shuts off gas when internal temperatures exceed 350°F (177°C)

Specifications

The Dormont Blue Hose®

Tubing	Annealed, 304 stainless steel
Braiding	Multi-strand, stainless steel wire
Coating	Blue antimicrobial PVC, melts at 350°F (177°C), coating will not hold a flame
End Fittings	Carbon steel; zinc trivalent chromate
Stress Guard®	360° rotational end fitting at both ends

Additional Components

Restraining Device	PVC coated, steel multi-strand cable and mounting hardware
Valve	Full port, brass body

Approvals & Certifications

NSF/ANSI 169 – Special-purpose food equipment and devices
ANSI Z21.69 / CSA 6.16 – Connectors for moveable gas appliances
ANSI Z21.41 / CSA 6.9 – Quick-Disconnect Devices for use with gas fuel appliances
ANSI Z21.15 / CSA 9.1 – Manually operated gas valves for appliances, appliance connectors
UL 567 _ Pipe connectors for flammible and combustible liquids and LP gas
Meets requirements of ANSI Z223.1 / NFPA 54 National Fuel Gas Code
Not for use in temperatures less than 32°F (0°C). For indoor use only.
Max operating pressure 1/2 psi.
Refer to the catalog for additional approvals and certifications or go to www.dormont.com.
A restraining device is required for all moveable gas equipment.

Safety System™ The Dormont Safety System™ is the first and only complete gas equipment connection system specifically engineered for the commercial kitchen. The Safety System consists of the famous Dormont Blue Hose and a variety of accessories designed for improved safety and performance in commercial kitchens. Because they are manufactured in the USA under an ISO qualified production process and to multiple design certifications, you can Connect with Confidence with the Dormont Safety System.

Dormont®

Double Swivel MAX® with SnapFast® Quick-Disconnect Deluxe Kit Assembly

Ordering Information

		LENGTH				
Configuration	Size I.D.	24" (607mm)	36" (914mm)	48" (1,219mm)	60" (1,524mm)	72" (1,829mm)
Deluxe Kit* Basic Kit** Hose Assembly***	½" (15mm)	1650KIT2S24 1650BPQ2SR24 1650BPQ2S24	1650KIT2S36 1650BPQ2SR36 1650BPQ2S36	1650KIT2S48 1650BPQ2SR48 1650BPQ2S48	1650KIT2S60 1650BPQ2SR60 1650BPQ2S60	1650KIT2S72 1650BPQ2SR72 1650BPQ2S72
Deluxe Kit* Basic Kit** Hose Assembly***	¾" (20mm)	1675KIT2S24 1675BPQ2SR24 1675BPQ2S24	1675KIT2S36 1675BPQ2SR36 1675BPQ2S36	1675KIT2S48 1675BPQ2SR48 1675BPQ2S48	1675KIT2S60 1675BPQ2SR60 1675BPQ2S60	1675KIT2S72 1675BPQ2SR272 1675BPQ2S72
Deluxe Kit* Basic Kit** Hose Assembly***	1" (25mm)	16100KIT2S24 16100BPQ2SR24 16100BPQ2S24	16100KIT2S36 16100BPQ2SR36 16100BPQ2S36	16100KIT2S48 16100BPQ2SR48 16100BPQ2S48	16100KIT2S60 16100BPQ2SR60 16100BPQ2S60	16100KIT2S72 16100BPQ2SR72 16100BPQ2S72
Deluxe Kit* Basic Kit** Hose Assembly***	1¼" (32mm)	16125KIT2S24 16125BPQ2SR24 16125BPQ2S24	16125KIT2S36 16125BPQ2SR36 16125BPQ2S36	16125KIT2S48 16125BPQ2SR48 16125BPQ2S48	16125KIT2S60 16125BPQ2SR60 16125BPQ2S60	16125KIT2S72 16125BPQ2SR72 16125BPQ2S72

BTU/hr Flow Capacity Natural Gas (Flow rating BTU/hr 0.64 SP. GR. @ 0.5 inch WC pressure drop)

		LENGTH				
Model	Size I.D.	24" (607mm)	36" (914mm)	48" (1,219mm)	60" (1,524mm)	72" (1,829mm)
1650BPQ2S	½" (15mm)	77,000	69,000	60,000	54,000	48,000
1675BPQ2S	¾" (20mm)	205,000	193,000	160,000	140,000	124,000
16100BPQ2S	1" (25mm)	366,000	336,000	295,000	261,000	247,000
16125BPQ2S	1¼" (32mm)	472,000	461,000	449,000	441,000	440,000

***Deluxe Kits include:** The Dormont Blue Hose, Double Swivel MAX, SnapFast, restraining device and full port valve
****Basic Kits include:** The Dormont Blue Hose, Double Swivel MAX, SnapFast, and restraining device
*****Hose Assemblies include:** The Dormont Blue Hose, Double Swivel MAX, SnapFast

Typical Installation

The Dormont Blue Hose®

The Dormont Blue Hose is a commercial, moveable-grade gas connector designed for use with moveable equipment.

Moveable equipment is defined in ANSI Standard Z21.69/CSA 6.16 as gas utilization equipment that may be mounted on casters or otherwise be subject to movement.

SwivelMAX

- Reduces stress on connector
- Increases kitchen aisle space by allowing connector to be positioned closer to the wall

SnapFast

- One-handed quick-disconnect fitting
- Thermal shut-off when internal temperature exceeds 350°F (177°C)

Restraining Device

- ANSI Z21.69 Standard section 1.7.4 states: Connectors when used on caster-mounted equipment shall be installed with a restraining device, which prevents transmission of the strain to the connector

We guarantee our commercial gas connectors for the life of the original appliance to which it is connected.

Dormont®

A Watts Water Technologies Company

ISO 9001-2008 CERTIFIED

USA: Export, PA • Tel. (724) 733-4800 • Fax: (724) 733-4808 • www.dormont.com

T&S BRASS AND BRONZE WORKS, INC.

2 Saddleback Cove / P.O. Box 1088
Travelers Rest, SC 29690

REG. #A2601
ISO #9001

Travelers Rest, SC: 800-476-4103 • Simi Valley, CA: 800-423-0150 • Fax: 864-834-3518 • www.tsbrass.com

Model No.
B-0221

Item No.

This Space for Architect/Engineer Approval

Job Name_____Date_____

Model Specified_____ Quantity_____

Customer/Wholesaler_____

Contractor_____

Architect/Engineer_____

ADA Compliant

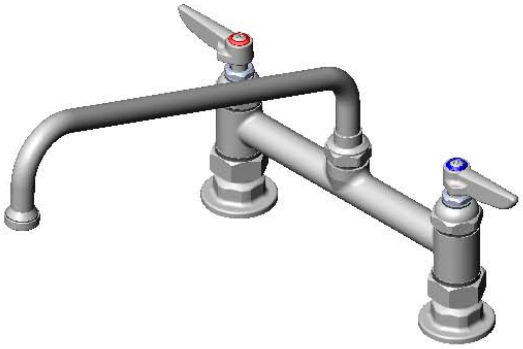

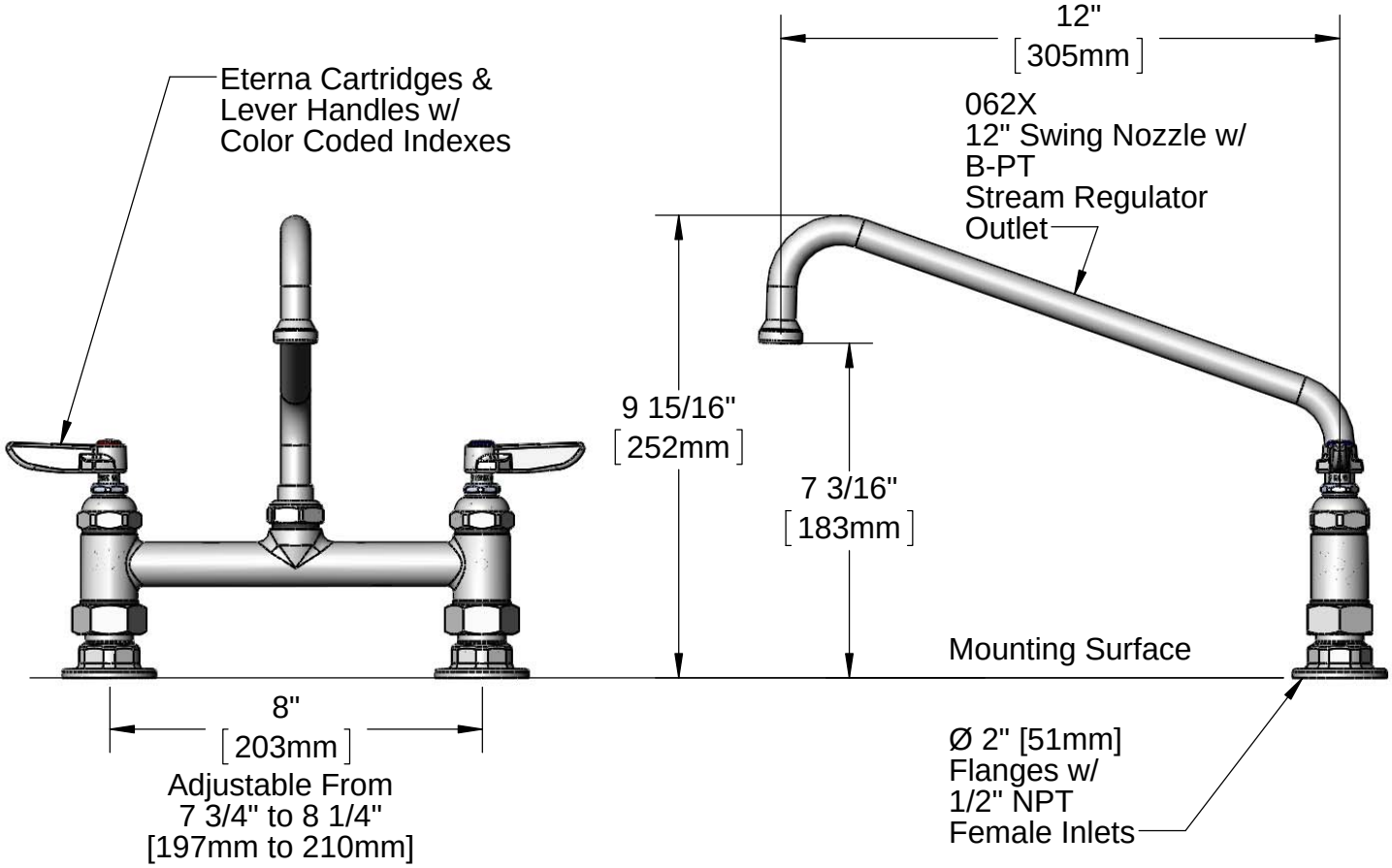

Note: Rough-In Requirement
(2) Ø 1" [25mm] Mounting Holes

Product Specifications:
Double Pantry Faucet w/ Eterna Cartridges, 12" Swing Nozzle w/ B-PT Stream Regulator Outlet, Lever Handles & 1/2" NPT Female Inlets

Drawn	Checked	Approved
DHL	KJG	JHB
Scale: 1:4		Date: 06/17/11

T&S BRASS AND BRONZE WORKS, INC.

2 Saddleback Cove / P.O. Box 1088
Travelers Rest, SC 29690

Travelers Rest, SC: 800-476-4103 Simi Valley, CA: 800-423-0150 Fax: 864-834-3518 www.tsbrass.com

REG. #A2601
ISO #9001

Model No.
B-0221

Item No.

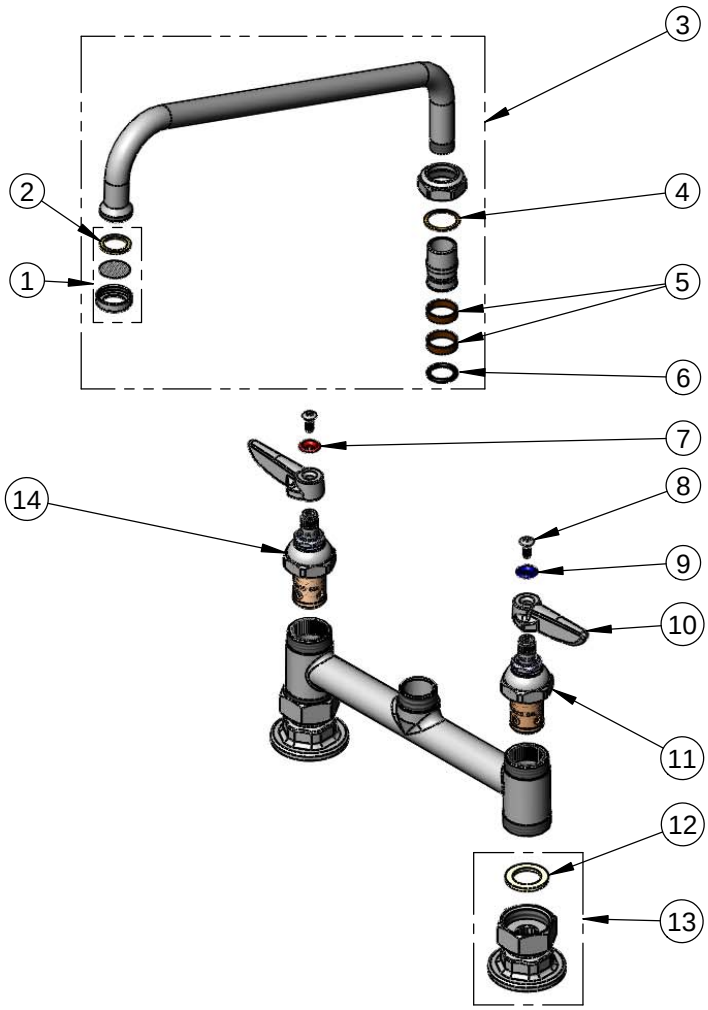

ITEM NO.	SALES NO.	DESCRIPTION
1	B-PT	Stream Regulator
2	001048-45	Nozzle Tip Washer
3	062X	12" Swing Nozzle Assembly w/ B-PT Stream Regulator
4	009538-45	Swivel Washer
5	011429-45	Swivel Sleeves (2)
6	001074-45	O-Ring
7	001661-45	Red Index-HW
8	000922-45	Lever Handle Screw
9	001660-45	Blue Index-CW
10	001638-45	Lever Handle
11	005959-40	Eterna Cartridge - LTC
12	001019-45	Coupling Nut Washer
13	00AA	Flange Assembly
14	005960-40	Eterna Cartridge - RTC

Product Specifications:

Double Pantry Faucet w/ Eterna Cartridges, 12" Swing Nozzle w/ B-PT Stream Regulator Outlet, Lever Handles & 1/2" NPT Female Inlets

Drawn	Checked	Approved
DHL	KJG	JHB
Scale: NTS		Date: 06/17/11

DESIGNER LINE WARMER

Model: DL1WE-PT

Designer-line

1-Section Extra-Wide
Pass-Thru Warmer

DL1WE-PT - Stainless steel front, aluminum end panels and interior
DL1WE-SA-PT - Stainless steel exterior, aluminum interior
DL1WE-SS-PT - Stainless steel exterior and interior

Options and Accessories

(upcharge and lead times may apply)

Additional chrome plated steel shelves	Rehinging of doors (consult factory)
Stainless steel shelves	Special electrical req. (consult factory)
Pan slide assemblies	**Correctional Facility Options**
Casters	• One way security screws
Custom laminates	• Locking hasp (lock not included)
Half doors	• Stainless steel mesh cover
Hinged glass doors (consult factory)	• Coverless hinges

Consult factory for other model configurations, options and accessories.

Project Name:

Model Specified:

Location:

Item No: **Quantity:**

AIA #: **SIS #:**

Standard Model Features

HEATING SYSTEM

- Self contained, performance rated heating system
- 90°F to 180°F temperature range
- Top mounted heating plenum “plug” with circulating fan
- Unique air flow distribution ducts

CABINET ARCHITECTURE

- 3” non-CFC polyurethane foam insulation
- Smooth, polished chrome workflow door handles
- Cam action, lift off hinges
- Self-closing doors
- Magnetic snap in Santoprene™ door gaskets
- Cylinder lock in each door
- Heavy duty, chrome plated steel shelves
- Heavy duty pilaster strips
- Adjustable 6” stainless steel legs

MODEL FEATURES

- Automatic interior lighting
- Electronic controller with digital display & hi-low alarm
- Stainless steel strip heaters located in base of interior

APPROVAL:

Continental® Refrigerator

Toll-Free: 800-523-7138
Phone: 215-244-1400
Fax: 215-244-9579

539 Dunksferry Road
Bensalem, PA 19020
www.continentalrefrigerator.com

Model Specifications

DIMENSIONAL DATA

Net Capacity (cubic feet)	22 (623 cu l)
Width, Overall (inches)	28 ½ (724 mm)
Depth, Overall (inches) (including handle)	38 ¾ (984 mm)
Depth (inches) (less door)	32 (813 mm)
Depth (inches) (door open 90°)	84 (2134 mm)
Clear Door Width (inches)	21 ⅞ (556 mm)
Clear Door Height (inches)	58 ⅝ (1489 mm)
Height, Overall (inches) (including 6" legs)	83 ¼ (2115 mm)
Number of Doors	2
Number of Shelves	3
Shelf Area (square feet)	22.2 (2.1 sq m)
Tray Slide Capacity	19

ELECTRICAL DATA

Voltage	208-230/60/1
Feed Wires (including ground)	3
Total Amps (International)	7.2 (7.2)
Total Wattage @ 208-230 volts	1500
10 ft. Cord/Plug (International)	No (No)

SHIPPING DATA

Height - Crated (inches)	85 ½ (2172 mm)
Width - Crated (inches)	31 ⅝ (803 mm)
Depth - Crated (inches)	42 (1067 mm)
Volume - Crated (cubic feet)	65 (1841 cu l)
Weight Std - Crated (pounds)	320 (145 kg)
Weight SS - Crated (pounds)	336 (152 kg)

Figures in parentheses reflect metric equivalents rounded to the nearest whole unit.

Model Plan Views

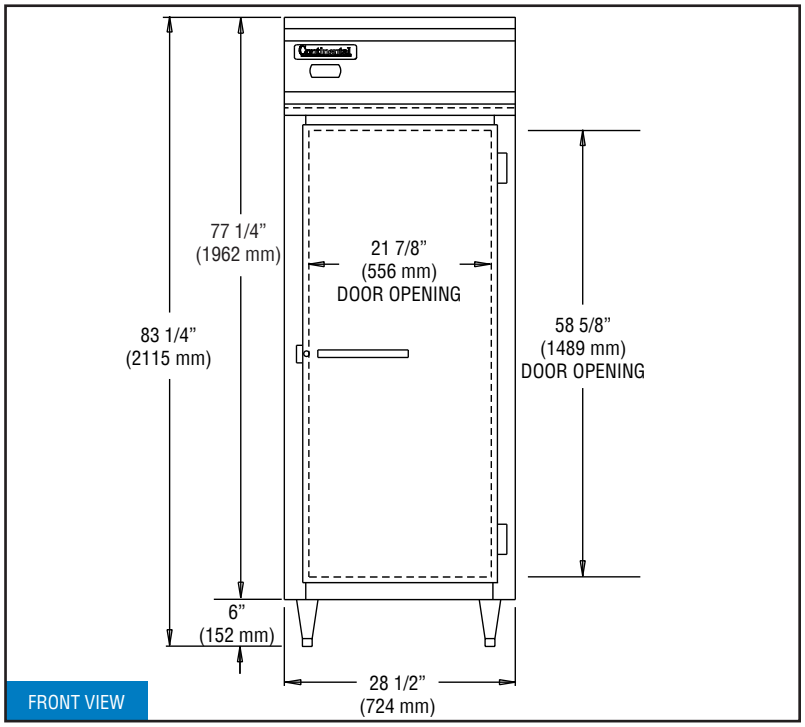

FRONT VIEW

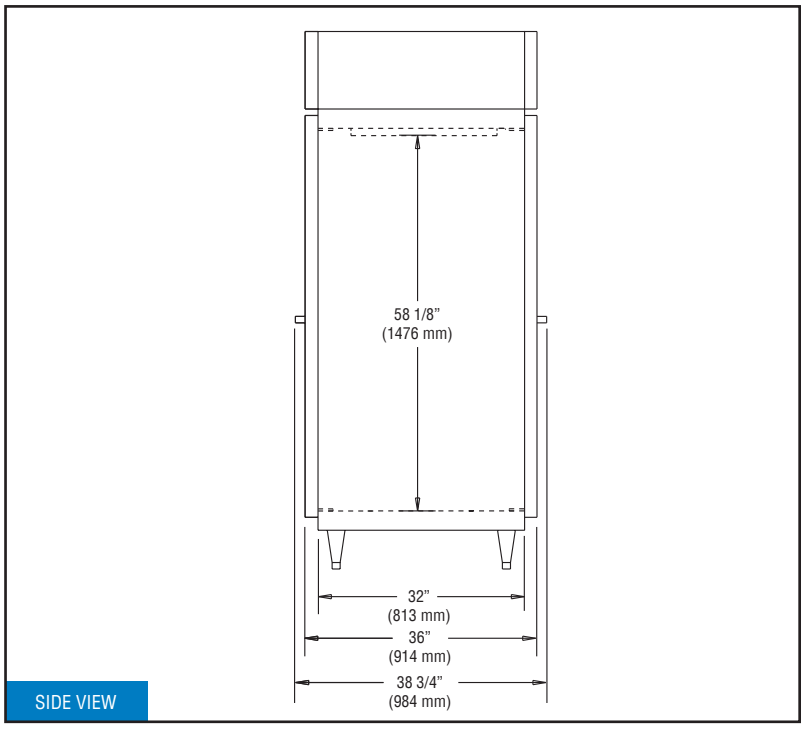

SIDE VIEW

IMPORTANT NOTE: If the cabinet is located directly against a wall and/or under a low ceiling, a minimum clearance of 12" is required on top and 3" on sides and rear.

Continental Refrigerator

Toll-Free: 800-523-7138
Phone: 215-244-1400
Fax: 215-244-9579

539 Dunksferry Road
Bensalem, PA 19020
www.continentalrefrigerator.com

Due to our continued efforts in developing innovative products, specifications subject to change without notice.

Intertek

Proudly Designed and Assembled in the USA

REVISED: 6/29/2022

PASS-THRU REFRIGERATOR

Model: 2RNPT

Natural Refrigerant R-290 Model

2-Section Pass-Thru Refrigerator

ENERGY STAR® Qualified Commercial Refrigerator

2RNPT - Stainless steel front, aluminum end panels and interior
2RNSAPT - Stainless steel exterior, aluminum interior
2RNSSPT - Stainless steel exterior and interior

Options and Accessories

(upcharge and lead times may apply)

Additional epoxy coated steel shelves	Hinged glass door (consult factory)
Chrome or stainless steel shelves	Special electrical req. (consult factory)
Rehinging of doors (consult factory)	**Correctional Facility Options**
Pan slide assemblies	• One way security screws
Wine rack	• Locking hasp (lock not included)
Adjustable legs	• Stainless steel mesh cover
Custom laminates	• Coverless hinges
Half doors	

Consult factory for other model configurations, options and accessories.

Continental® Refrigerator

Toll-Free: 800-523-7138
Phone: 215-244-1400
Fax: 215-244-9579

539 Dunksferry Road
Bensalem, PA 19020
www.continentalrefrigerator.com

Project Name:

Model Specified:

Location:

Item No: **Quantity:**

AIA #: **SIS #:**

Standard Model Features

REFRIGERATION SYSTEM

- Self contained, performance rated "plug" refrigeration system
- Natural, environmentally safe, high efficiency R-290 refrigerant[1]
- Refrigeration system is readily accessible on top of cabinet, separate from the "food zone"
- Automatic, hot gas condensate evaporator
- Expansion valve system

CABINET ARCHITECTURE

- 3" non-CFC polyurethane foam insulation
- Smooth, polished chrome workflow door handles
- Cam action, lift off hinges
- Self-closing doors
- Magnetic snap in Santoprene™ door gaskets
- Cylinder lock in each door
- Heavy duty, epoxy coated steel shelves
- Heavy duty pilaster strips
- 5" casters

MODEL FEATURES

- LED interior lighting
- Electronic controller with digital display & hi-low alarm
- Top and side air distribution ducts
- Off-cycle defrost
- Cabinet upper side panels and refrigeration "plug" system can be removed and reinstalled at job site

[1] R-290 refrigerant meets all federal and state regulatory requirements.

APPROVAL:

Model Specifications

DIMENSIONAL DATA

Net Capacity (cubic feet)	50 (1416 cu l)
Width, Overall (inches)	52 (1321 mm)
Depth, Overall (inches) (including handles)	38 ¾ (984 mm)
Depth (inches) (less doors)	32 (813 mm)
Depth (inches) (doors open 90°)	79 (2007 mm)
Clear Door Width (inches)	19 ⅜ (492 mm)
Clear Door Height (inches)	58 ⅝ (1489 mm)
Height, Overall (inches) (including 5" casters)	82 ¼ (2089 mm)
Number of Doors	4
Number of Shelves	6
Shelf Area (square feet)	40.8 (3.8 sq m)
Tray Slide Capacity (per section)	24

REFRIGERANT DATA

Condensing Unit Size (H.P.)	⅓+
Capacity (BTU per hour)*	2560

ELECTRICAL DATA

Voltage (International)	115/60/1 (220/50/1)
Feed Wires (including ground)	3
Total Amps (International)	6.4 (4.7)
10 ft. Cord/Plug [attached] (International)	Yes (No)

SHIPPING DATA

Height - Crated (inches)	85 ½ (2172 mm)
Width - Crated (inches)	64 (1626 mm)
Depth - Crated (inches)	42 (1067 mm)
Volume - Crated (cubic feet)	133 (3766 cu l)
Weight Std - Crated (pounds)	580 (263 kg)
Weight SS - Crated (pounds)	610 (277 kg)

* Rating @ +25°F evaporator, 90°F ambient
Figures in parentheses reflect metric equivalents rounded to the nearest whole unit.

Equipped with one NEMA-5-15P Plug
(varies by country)

Model Plan Views

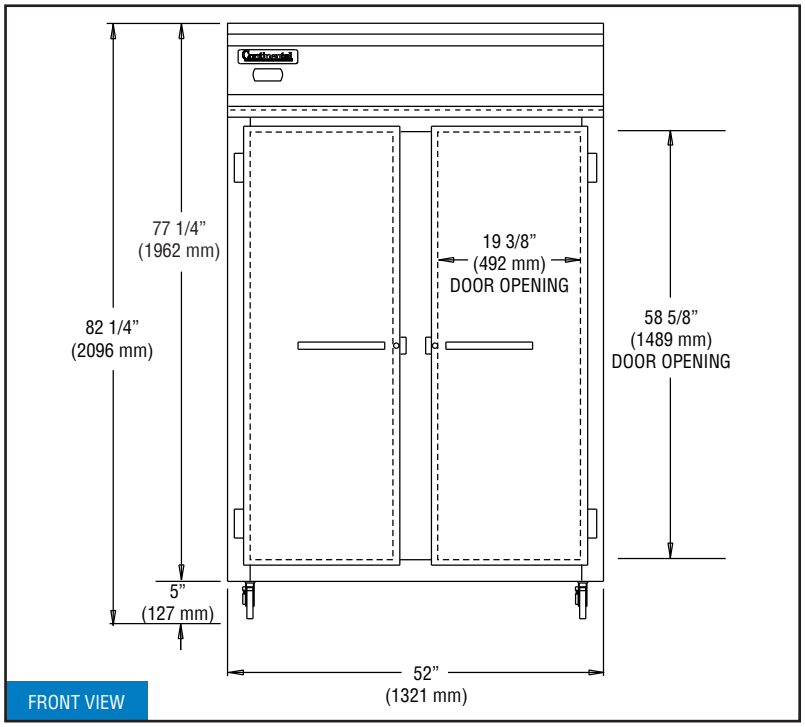

FRONT VIEW

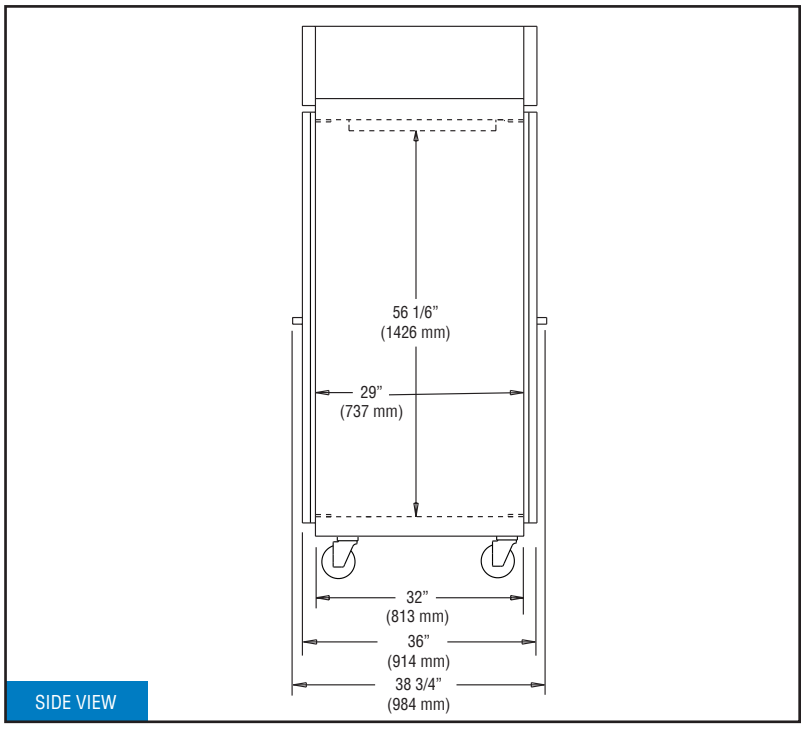

SIDE VIEW

IMPORTANT NOTE: If the cabinet is located under a low ceiling, a minimum clearance of 12" is required on top and 3" on sides.

Continental Refrigerator

Toll-Free: 800-523-7138
Phone: 215-244-1400
Fax: 215-244-9579

539 Dunksferry Road
Bensalem, PA 19020
www.continentalrefrigerator.com

Due to our continued efforts in developing innovative products, specifications subject to change without notice.

Intertek

Proudly Designed and Assembled in the USA

REVISED: 5/18/2022

ADVANCE TABCO
SMART FABRICATION™

STAINLESS STEEL

HAND SINKS

PEDESTAL BASE

Conforms To NSF 61/9 Lead Free Requirements

7-PS-90

7-PS-96

7-PS-99

7-PS-95

7-PS-18

Item #: _____ **Qty #:** _____

Model #: _____

Project #: _____

FEATURES:

One piece **Deep Drawn** sink bowl design.

Sink bowl is 10" x 14" x 5"*.

(***7-PS-18** sink bowl is 14" x 16" x 6")

All sink bowls have a large liberal radii with a minimum dimension of 2" and are rectangular in design for increased capacity.

Stainless steel basket drain 1-1/2" IPS.

Flush-to-wall unit.

"Hands Free" splash mounted gooseneck faucet furnished with aerator. (**Faucet Flow Rate:** 1.0 GPM/3.8 LPM aerator. 60 PSI.)

Foot Pedal Valve for water operation.

Easy removable panel to access hidden plumbing.

Specific Features:

7-PS-95 towel dispenser with hinged towel box. Unit uses standard C-fold towels. Liquid Soap dispenser.

7-PS-96 includes two 7-3/4" high Side Splashes.

7-PS-99 towel dispenser & soap dispenser plus trash receptacle & cabinet storage.

CONSTRUCTION:

All TIG welded.

Welded areas blended to match adjacent surfaces and to a satin finish.

Die formed Countertop Edge with a No-Drip offset.

One sheet of stainless steel - No Seams.

MATERIAL:

Heavy gauge type 304 series stainless steel.

Wall mounting bracket is galvanized and of offset design.

All fittings are brass / chrome plated unless otherwise indicated.

MECHANICAL:

Single pedal mixing valve with 3/8" NPT Female. Built in check valve. Front operated temperature adjustment.

(Contractor on site must connect faucet to foot pedal operated valves.)

NOW AVAILABLE

Tankless Electric Heater

Only Needs Cold Water Supply

7-PS-92

Please See Tankless Heater Specification Sheet for Details

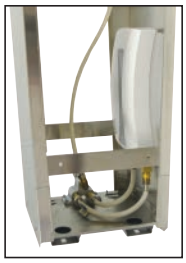

⚠ WARNING:

Equipment that includes a faucet may expose you to chemicals, including lead, that are known to the State of California to cause cancer or birth defects or other reproductive harm. For more Info.,visit www.p65warnings.ca.gov.

ADVANCE TABCO
SMART FABRICATION™
www.advancetabco.com

Customer Service Available To Assist You 1-800-645-3166 8:30 am - 7:00 pm E.S.T.

For Orders & Customer Service:
Email: customer@advancetabco.com or Fax: 631-242-6900

For Smart Fabrication™ Quotes:
Email: smartfab@advancetabco.com or Fax: 631-586-2933

DIMENSIONS and SPECIFICATIONS

TOL Overall: ± .500” Interior: ± .250” **FITTINGS SUPPLIED AS SHOWN** **ALL DIMENSIONS ARE TYPICAL**

7-PS-90

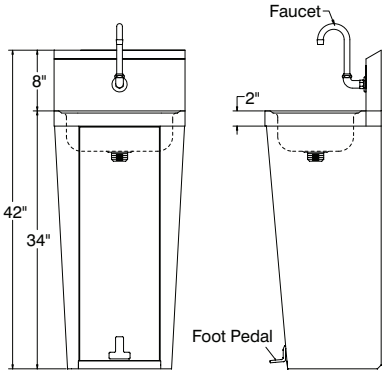

Pedestal Base Front View
For 7-PS-90 & 7-PS-96

41 lbs.

7-PS-96

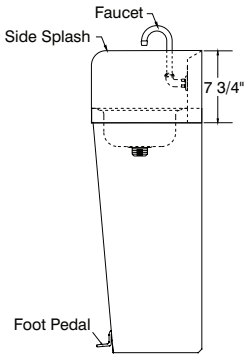

47 lbs.

7-PS-18

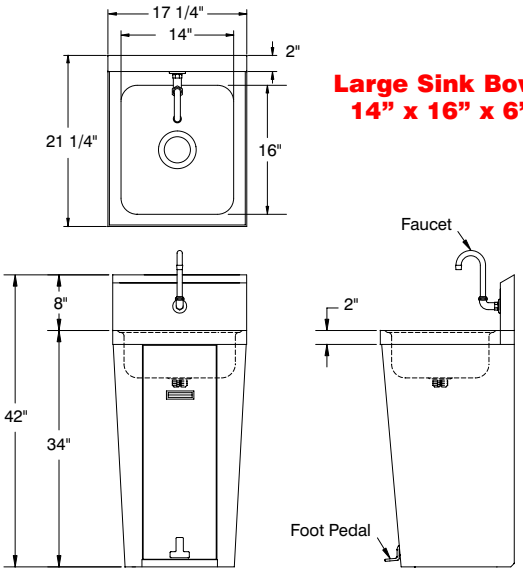

Large Sink Bowl
14” x 16” x 6”

50 lbs.

7-PS-95

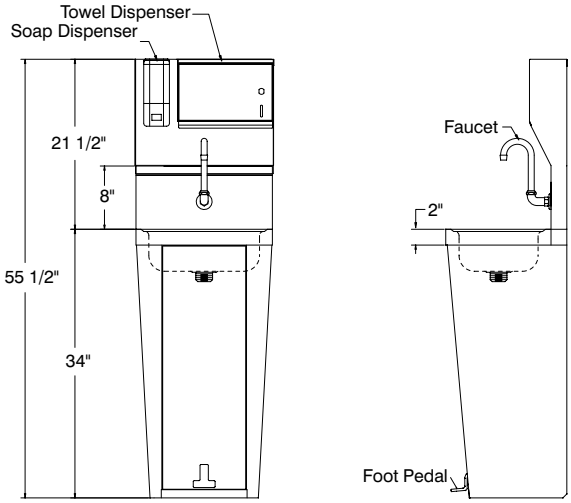

54 lbs. Pedestal Base

TOP VIEW 7-PS-90 & 7-PS-96

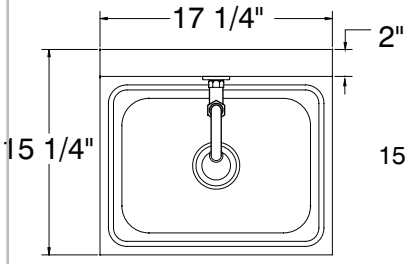

TOP VIEW 7-PS-95 & 7-PS-99

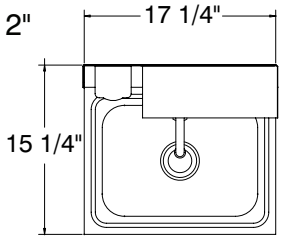

Sink Bowls 10” x 14” x 5”

7-PS-99

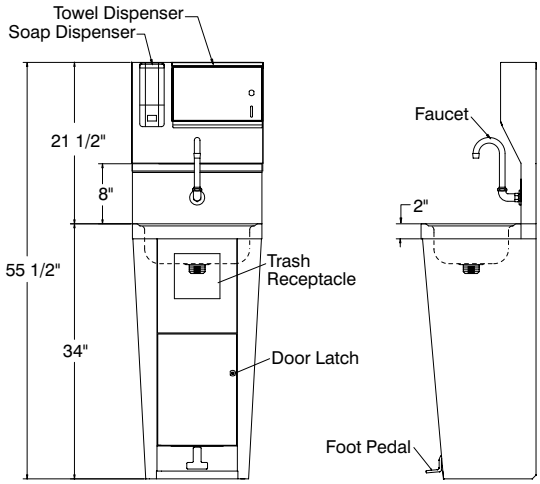

59 lbs. Pedestal Base

REAR VIEW OF STANDARD PEDESTAL BASE UNITS

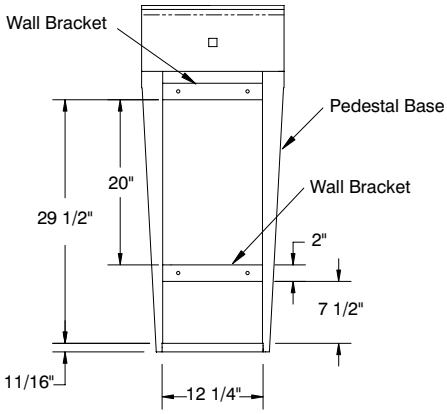

ADVANCE TABCO
SMART FABRICATION™

REF-B 325 Wireless Boulevard, Hauppauge, NY 11788

ADVANCE TABCO is constantly engaged in a program of improving our products. Therefore, we reserve the right to change specifications without prior notice.

29 	1 ea	**SERVING COUNTER, UTILITY**
		Piper Products/Servolift Eastern Model No. 3-ST-MOD Elite Utility Serving Counter, 46"L x 36"H, mobile modular design with interlocking mech., 14 gauge stainless steel top, 20 gauge stainless steel front & end panels, 18 gauge stainless steel undershelf, 5" casters, NSF, MODIFIED TO 48"L x 30"D x 34"H.
	1 ea	1 year warranty parts and labor from date of purchase
	1 ea	FRMA-48 Formica laminate without doors, for Elite systems
		******Piper is quoting standard equipment as an alternate to the specs provided. Review Piper's spec sheets for details.*******

FOOD FACILITIES CONCEPTS, INC.

Existing Food Service Equipment Survey

Project: **Item No. 30**

Project No:

Date:

Quantity: One (1)

Description: Milk Cooler

Manufacturer: Beverage-Air

Model No.:

Maintenance Requirements:	Recommendations:
[√] Thorough Cleaning	[ ] Reuse
[ ] Minor parts replacement	[√] Relocate
[ ] Refinishing	[ ] Replace
[ ] Painting	[ ] Discard
[ ] Reconstruction	[ ] Remove to storage
[ ] Major parts replacement	[ ] Pending

Dimensions: Length: _____ Width: _____ Height: _____

Condition: New [ ] Good [√] Fair [ ] Poor [ ]

Comments:

Electrical

CONN VOLTS/PH LOAD

Plumbing

(QTY)SIZE" WATER (QTY)SIZE" DRAIN

Gas

(QTY) SIZE" MBTU'S TYPE

Steam

SUP" CR" LB/HR PSI

Utility Notations & Abbreviations

A – Amperes	IW – Indirect Waste	QD – Quick Disconnect
C – Cold Water	JB – Junction Box	SR – Single Receptacle
DR – Duplex Receptacle	kW – Kilowatt	TP – Terminal Panel
H – Hot Water	N – Natural Gas	UDS – Utility Distribution System
HP – Horse Power	P – Propane Gas	W – Direct Waste

CADDY Food Service Systems

ITEM NO:

PROJECT:

LOCATION:

Self-Leveling Dispensers for Trays Cabinet or Cantilever Style

TOP VIEW

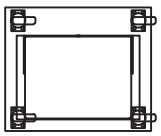

TOP VIEW

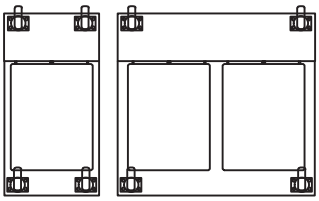

TOP VIEW

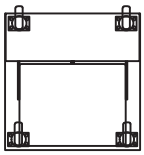

CM-1418

CM-1814-2C

CM-1418-C

Capacity: 75 trays*

(Actual capacities vary with shape of tray to be dispensed.)

* CM-1814-2C capacity: 150 trays

Dimensions				
Model	**Length**	**Width**	**Height**	**Trays**
CM-1418	25 3/8"	21 1/2"	34 1/4"	14" x 18"
CM-1622	27"	23 1/2"	34 1/4"	16" x 22"
CM-1814-C	16 1/2"	31 3/4"	35 1/2"	14" x 18"
CM-2015-C	16 1/2"	31 3/4"	35 1/2"	15" x 20"
CM-2216-C	16 1/2"	31 3/4"	35 1/2"	16" x 22"
CM-1418-C	23 1/2"	23 3/4"	35 1/2"	14" x 18"
CM-1520-C	23 1/2"	23 3/4"	35 1/2"	15" x 20"
CM-1622-C	23 1/2"	24 3/4"	35 1/2"	16" x 22"
CM-1814-2C	34 1/4"	24 3/4"	35 1/2"	14" x 18"

General Specifications

Caddy Magic self-leveling dispenser to be Caddy Corporation model CM-_____.

Self-leveling mechanism to be cantilevered suspension type. Removable panel to be provided to permit easy calibration without the use of tools, for full load factors from 20 to 182 pounds and without prior identification of wares, irrespective of weight, height, or brand. Mechanism to be free of cables, chains, pulleys, sprockets, gears, levers, crank handles or components requiring periodic maintenance and lubrication.

Removable load platform to be 18 gauge stainless steel and secured to 16 gauge stainless steel angle support frame and a pair of cantilevered suspension arms. Suspension arms to be of rust-resistant 1/4" steel and to be securely guided by ball bearing rollers. Total stacking height to edge of top frame to be not less than 22".

Cabinet models specifications:

Unit to have 16 gauge stainless steel top with 2" turned down channel edge on 4 sides and welded finished corners. Exterior of cabinet to be stainless steel. Cabinet corners to be reinforced with 16 gauge stainless steel channels and to have full height extruded plastic vertical bumpers.

Bottom of cabinet to be 12 gauge stainless steel, rust resistant metal and to have 2-1/2" diameter center clean-out hole with a removable plug. Unit to be mounted on four 4" diameter swivel type casters with polyurethane tires.

Cantilever models specifications:

The lower rack storage platform to be formed of 16 gauge stainless steel, channeled down on all four sides with two stainless steel reinforce members underneath. Unit to be mounted on four 4" diameter swivel type casters with polyurethane tires.

Unit to be provided with the following accessories:

Accessories

- ☐ **ACC-63** - 5" diameter swivel casters with polyurethane tires in lieu of 4" diameter swivel casters. (Add 1-1/8" to height)
- ☐ **ACC-41** - Caster brakes on two diagonal casters.
- ☐ **ACC-50** - Perimeter bumpers with replaceable corner bumpers. (Add 1-1/4" to length and width)
- ☐ **ACC-51** - Guides for automatic tray stacking.
- ☐ **ACC-52** - Vertical corner bumpers only. Easy to replace. (Add 1-1/4" to length and width)

CADDY CORPORATION
509 Sharptown Road P.O. Box 345
Bridgeport, NJ 08014-0345
Tel: 856-467-4222 Fax: 856-467-5511
internet: www.caddycorp.com

CADDY Food Service Systems

ITEM NO:

PROJECT:

LOCATION:

Self-Leveling Dispensers for

Trays & Silver
Cabinet or Cantilever Style

CABINET STYLE

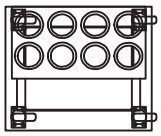

CANTILEVER STYLE

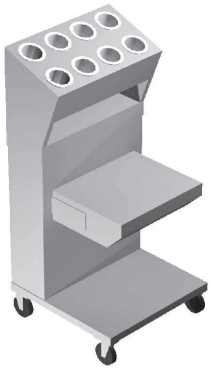

Capacities**			
Model	Tray Size	Tray Qty.	Cutlery Cutouts
CM-1418-CS	14" x 18"	75	8
CM-1418-S	14" x 18"	75	8
CM-1622-S	16" x 22"	75	8
CM-1814-CS	14" x 18"	75	6
CM-1814-2CS	14" x 18"	150	12
CM-1814-2CSL	14" x 18"	150	18

** Actual capacities vary with shape of tray and cutlery to be dispensed.

Dimensions			
Model	Length	Width	Height
CM-1418-CS	23 1/2"	23"	51 1/4"
CM-1418-S	25 1/2"	21 1/2"	49 3/4"
CM-1622-S	27"	23 1/2"	49 3/4"
CM-1814-CS	16 1/2"	31 3/4"	51 1/4"
CM-1814-2CS	34 1/4"	31 3/4"	51 1/4"
CM-1814-2CSL	34 1/4"	31 3/4"	51 1/4"

General Specifications

Caddy Magic self-leveling dispenser to be Caddy Corporation model CM-_____.

Self-leveling mechanism to be cantilevered suspension type. Removable panel to be provided to permit easy calibration without the use of tools, for full load factors from 20 to 182 pounds and without prior identification of wares, irrespective of weight, height, or brand. Mechanism to be free of cables, chains, pulleys, sprockets, gears, levers, crank handles or components requiring periodic maintenance and lubrication.

Removable load platform to be 18 gauge stainless steel and secured to 16 gauge stainless steel angle support frame and a pair of cantilevered suspension arms. Suspension arms to be of rust-resistant 1/4" steel and to be securely guided by ball bearing rollers. Total stacking height to edge of top frame to be not less than 22".

Unit provided with 20 gauge stainless steel cutlery housing with die-stamped reinforced openings for cutlery cylinders. End enclosures to be16 gauge stainless steel.

Cabinet models specifications:
Unit to have 16 gauge stainless steel top with 2" turned down channel edge on 4 sides and welded finished corners. Exterior of cabinet to be stainless steel. Cabinet corners to be reinforced with 16 gauge stainless steel channels and to have full height extruded plastic vertical bumpers.

Bottom of cabinet to be 12 gauge stainless steel, rust resistant metal and to have 2-1/2" diameter center clean-out hole with a removable plug. Unit to be mounted on four 4" diameter swivel type casters with polyurethane tires.

Cantilever models specifications:
The lower rack storage platform to be formed of 16 gauge stainless steel, channeled down on all four sides with two stainless steel reinforce members underneath. Unit to be mounted on four 4" diameter swivel type casters with polyurethane tires.

Unit to be provided with the following accessories:

Accessories

- ☐ **ACC-63** - 5" diameter swivel casters with polyurethane tires in lieu of 4" diameter swivel casters. (Add 1-1/8" to height)
- ☐ **ACC-41** - Caster brakes on two diagonal casters.
- ☐ **ACC-49*** - Perforated plastic cutlery cylinders. Approximate capacity per cylinder: 48 knives, 36 forks, or 40 spoons
- ☐ **ACC-50** - Perimeter bumpers with replaceable corner bumpers. (Add 1-1/4" to length and width)
- ☐ **ACC-52** - Vertical corner bumpers only. Easy to replace. (Add 1-1/4" to length and width)

* Specify quantity required

CADDY CORPORATION
509 Sharptown Road P.O. Box 345
Bridgeport, NJ 08014-0345
Tel: 856-467-4222 Fax: 856-467-5511
internet: www.caddycorp.com

ITEM NO:

PROJECT:

LOCATION:

Self-Leveling Dispensers for

Trays & Silver
Cabinet or Cantilever Style

TOP VIEW

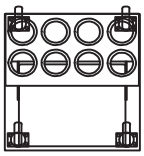

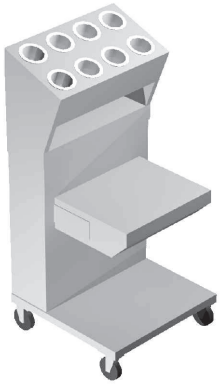

CM-1418-CS

TOP VIEW

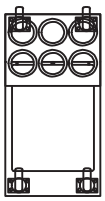

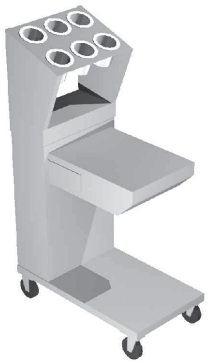

CM-1814-CS

TOP VIEW

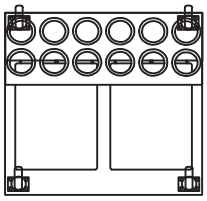

CM-1814-2CS

TOP VIEW

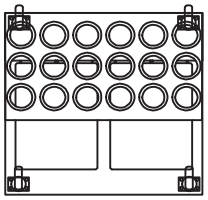

CM-1814-2CSL

TOP VIEW

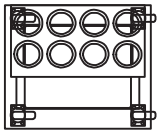

CM-1418-S

TOP VIEW

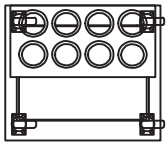

CM-1622-S

CADDY CORPORATION
509 Sharptown Road P.O. Box 345
Bridgeport, NJ 08014-0345
Tel: 856-467-4222 Fax: 856-467-5511
internet: www.caddycorp.com

FOOD FACILITIES CONCEPTS, INC.

Existing Food Service Equipment Survey

Project: **Item No. 32**

Project No:

Date:

Quantity: One (1)

Description: Hot Food Counter

Manufacturer: Piper

Model No.: 5MF

Maintenance Requirements:	Recommendations:
[√] Thorough Cleaning	[ ] Reuse
[ ] Minor parts replacement	[√] Relocate
[ ] Refinishing	[ ] Replace
[ ] Painting	[ ] Discard
[ ] Reconstruction	[ ] Remove to storage
[ ] Major parts replacement	[ ] Pending

Dimensions: Length: _____

Width: _____

Height: _____

Condition: New [ ]

Good [√]

Fair [ ]

Poor [ ]

Comments: _____

Electrical

CONN VOLTS/PH LOAD

Plumbing

(QTY)SIZE" WATER (QTY)SIZE" DRAIN

Gas

(QTY) SIZE" MBTU'S TYPE

Steam

SUP" CR" LB/HR PSI

	Utility Notations & Abbreviations	
A – Amperes	IW – Indirect Waste	QD – Quick Disconnect
C – Cold Water	JB – Junction Box	SR – Single Receptacle
DR – Duplex Receptacle	kW – Kilowatt	TP – Terminal Panel
H – Hot Water	N – Natural Gas	UDS – Utility Distribution System
HP – Horse Power	P – Propane Gas	W – Direct Waste

33 1 ea **SERVING COUNTER, UTILITY**

Piper Products/Servolift Eastern Model No. 2-ST-MOD
Elite Utility Serving Counter, 32"L x 36"H, mobile modular design with interlocking mech., 14 gauge stainless steel top, 20 gauge stainless steel front & end panels, 18 gauge stainless steel undershelf, 5" casters, NSF, MODIFIED TO 24"L x 34"H.

1 ea 1 year warranty parts and labor from date of purchase

1 ea FRMA-24 Formica laminate without doors, for Elite systems

1 ea SFTS-10-24 Trayslide for Elite system, 10" solid flat, heavy gauge stainless steel, for (2) openings - 32"W, ON OPERATOR SIDE

1 ea CPG-24 Protector Guard (Cafeteria Style) for Elite system, with end guards, for (2) openings - 32"W

1 ea Hinged guard

***** Specify height of front acrylic needed at time of order. *****

******Piper is quoting standard equipment as an alternate to the specs provided. Review Piper's spec sheets for details.*******

Class 150 Weight: 263 lbs total

34

1 ea **SERVING COUNTER, COLD FOOD**

Piper Products/Servolift Eastern Model No. 5-CB-MOD
Elite Cool Breeze Cold Food Serving Counter, 74"L x 36"H, (5) pan size, 4-3/4" dp, mech. cooled forced air, mobile modular design with interlocking, stainless steel top, front, end panel, removable louvered panel, sliding doors & undershelf, 5" casters, 1/3 hp, NSF, UL, MODIFIED TO 34"H.

1 ea 1 year warranty parts and labor from date of purchase

1 ea 120v/60/1-ph, 10.3 amps, NEMA 5-15P

1 ea FRMAD-74 Formica laminate with doors, for Elite systems

1 ea SFTS-10-74 Trayslide for Elite system, 10" solid flat, heavy gauge stainless steel, for (5) openings - 74"W, ON OPERATOR SIDE

1 ea CPG-LED-74 Protector Guard with LED Lights (Cafeteria Style) for Elite system, with end guards, for (5) openings - 74"W

1 ea Hinged guard

***** Specify height of front acrylic needed at time of order. *****

******Piper is quoting standard equipment as an alternate to the specs provided. Review Piper's spec sheets for details.*******

Class 150 Weight: 555 lbs total

Item	Qty	Description
		Piper Products/Servolift Eastern Model No. 2-CD-MOD Elite Cashier's Serving Counter, 30"L x 36"H, mobile modular design with interlocking mech., 14 gauge stainless steel top with register cord hole, locking drawer, 20 gauge stainless steel front & end panels, 5" casters, MODIFIED TO 48"L x 30"D x 34"H.
	1 ea	1 year warranty parts and labor from date of purchase
	1 ea	FRMA-48 Formica laminate without doors, for Elite systems
	1 ea	SFTS-10-48 Trayslide for Elite system, 10" solid flat, heavy gauge stainless steel, for (2) openings - 30"W, ON OPERATOR SIDE
		******Piper is quoting standard equipment as an alternate to the specs provided. Review Piper's spec sheets for details.*******
Class 150		Weight: 179 lbs total

FOOD FACILITIES CONCEPTS, INC.

Existing Food Service Equipment Survey

Project: **Item No. 37**

Project No:

Date:

Quantity: One (1)

Description: Pretzel Cabinet

Manufacturer:

Model No.:

Maintenance Requirements:	Recommendations:
[√] Thorough Cleaning	[ ] Reuse
[ ] Minor parts replacement	[√] Relocate
[ ] Refinishing	[ ] Replace
[ ] Painting	[ ] Discard
[ ] Reconstruction	[ ] Remove to storage
[ ] Major parts replacement	[ ] Pending

Dimensions: Length: _____ Width: _____ Height: _____

Condition: New [ ] Good [√] Fair [ ] Poor [ ]

Comments:

Electrical

CONN VOLTS/PH LOAD

Plumbing

(QTY)SIZE" WATER (QTY)SIZE" DRAIN

Gas

(QTY) SIZE" MBTU'S TYPE

Steam

SUP" CR" LB/HR PSI

Utility Notations & Abbreviations

A – Amperes	IW – Indirect Waste	QD – Quick Disconnect
C – Cold Water	JB – Junction Box	SR – Single Receptacle
DR – Duplex Receptacle	kW – Kilowatt	TP – Terminal Panel
H – Hot Water	N – Natural Gas	UDS – Utility Distribution System
HP – Horse Power	P – Propane Gas	W – Direct Waste

FOOD FACILITIES CONCEPTS, INC.

Existing Food Service Equipment Survey

Project: **Item No. 43**

Project No:

Date:

Quantity: One (1)

Description: 3-HP Disposer

Manufacturer:

Model No.:

Maintenance Requirements:	Recommendations:
[√] Thorough Cleaning	[ ] Reuse
[ ] Minor parts replacement	[√] Relocate
[ ] Refinishing	[ ] Replace
[ ] Painting	[ ] Discard
[ ] Reconstruction	[ ] Remove to storage
[ ] Major parts replacement	[ ] Pending

Dimensions: Length:

Width:

Height:

Condition: New [ ] Good [√] Fair [ ] Poor [ ]

Comments:

Electrical

CONN VOLTS/PH LOAD

Plumbing

(QTY)SIZE" WATER (QTY)SIZE" DRAIN

Gas

(QTY) SIZE" MBTU'S TYPE

Steam

SUP" CR" LB/HR PSI

Utility Notations & Abbreviations

A – Amperes	IW – Indirect Waste	QD – Quick Disconnect
C – Cold Water	JB – Junction Box	SR – Single Receptacle
DR – Duplex Receptacle	kW – Kilowatt	TP – Terminal Panel
H – Hot Water	N – Natural Gas	UDS – Utility Distribution System
HP – Horse Power	P – Propane Gas	W – Direct Waste

FOOD FACILITIES CONCEPTS, INC.

Existing Food Service Equipment Survey

Project: **Item No. 44**

Project No:

Date:

Quantity: One (1)

Description: Pre-Rinse Spray Assembly

Manufacturer:

Model No.:

Maintenance Requirements:	Recommendations:
[√] Thorough Cleaning	[ ] Reuse
[ ] Minor parts replacement	[√] Relocate
[ ] Refinishing	[ ] Replace
[ ] Painting	[ ] Discard
[ ] Reconstruction	[ ] Remove to storage
[ ] Major parts replacement	[ ] Pending

Dimensions: Length:

Width:

Height:

Condition: New [ ]

Good [√]

Fair [ ]

Poor [ ]

Comments:

Electrical

CONN VOLTS/PH LOAD

Plumbing

(QTY)SIZE" WATER (QTY)SIZE" DRAIN

Gas

(QTY) SIZE" MBTU'S TYPE

Steam

SUP" CR" LB/HR PSI

Utility Notations & Abbreviations

A – Amperes	IW – Indirect Waste	QD – Quick Disconnect
C – Cold Water	JB – Junction Box	SR – Single Receptacle
DR – Duplex Receptacle	kW – Kilowatt	TP – Terminal Panel
H – Hot Water	N – Natural Gas	UDS – Utility Distribution System
HP – Horse Power	P – Propane Gas	W – Direct Waste

FOOD FACILITIES CONCEPTS, INC.

Existing Food Service Equipment Survey

Project: **Item No. 45**

Project No:

Date:

Quantity: One (1)

Description: Dishmachine

Manufacturer: Hobart

Model No.: AM16VLT

Maintenance Requirements:	Recommendations:
[√] Thorough Cleaning	[ ] Reuse
[ ] Minor parts replacement	[√] Relocate
[ ] Refinishing	[ ] Replace
[ ] Painting	[ ] Discard
[ ] Reconstruction	[ ] Remove to storage
[ ] Major parts replacement	[ ] Pending

Dimensions: Length: _____

Width: _____

Height: _____

Condition: New [ ] Good [√] Fair [ ] Poor [ ]

Comments: _____

Electrical

CONN VOLTS/PH LOAD

Plumbing

(QTY)SIZE" WATER (QTY)SIZE" DRAIN

Gas

(QTY) SIZE" MBTU'S TYPE

Steam

SUP" CR" LB/HR PSI

	Utility Notations & Abbreviations	
A – Amperes	IW – Indirect Waste	QD – Quick Disconnect
C – Cold Water	JB – Junction Box	SR – Single Receptacle
DR – Duplex Receptacle	kW – Kilowatt	TP – Terminal Panel
H – Hot Water	N – Natural Gas	UDS – Utility Distribution System
HP – Horse Power	P – Propane Gas	W – Direct Waste

FOOD FACILITIES CONCEPTS, INC.

Existing Food Service Equipment Survey

Project: **Item No. 49**

Project No:

Date:

Quantity: One (1)

Description: 3-Bowl Pot & Pan Sink

Manufacturer: _____

Model No.: _____

Maintenance Requirements:	Recommendations:
[√] Thorough Cleaning	[ ] Reuse
[ ] Minor parts replacement	[√] Relocate
[ ] Refinishing	[ ] Replace
[ ] Painting	[ ] Discard
[ ] Reconstruction	[ ] Remove to storage
[ ] Major parts replacement	[ ] Pending

Dimensions: Length: _____

Width: _____

Height: _____

Condition: New [ ] Good [√] Fair [ ] Poor [ ]

Comments: _____

Electrical

CONN VOLTS/PH LOAD

Plumbing

(QTY)SIZE" WATER (QTY)SIZE" DRAIN

Gas

(QTY) SIZE" MBTU'S TYPE

Steam

SUP" CR" LB/HR PSI

Utility Notations & Abbreviations

A – Amperes	IW – Indirect Waste	QD – Quick Disconnect
C – Cold Water	JB – Junction Box	SR – Single Receptacle
DR – Duplex Receptacle	kW – Kilowatt	TP – Terminal Panel
H – Hot Water	N – Natural Gas	UDS – Utility Distribution System
HP – Horse Power	P – Propane Gas	W – Direct Waste

T&S BRASS AND BRONZE WORKS, INC.

2 Saddleback Cove / P.O. Box 1088
Travelers Rest, SC 29690

Travelers Rest, SC: 800-476-4103 • Simi Valley, CA: 800-423-0150 • Fax: 864-834-3518 • www.tsbrass.com

Model No.

B-0231

Item No.

ADA Compliant

This Space for Architect/Engineer Approval

Job Name_____Date_____

Model Specified_____ Quantity_____

Customer/Wholesaler_____

Contractor_____

Architect/Engineer_____

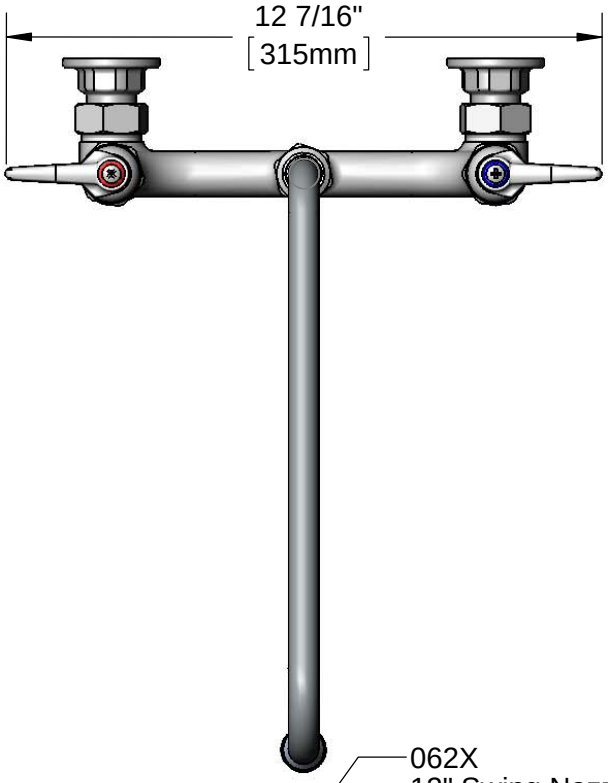

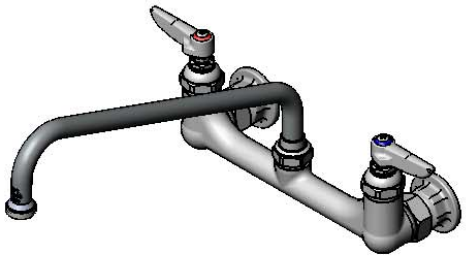

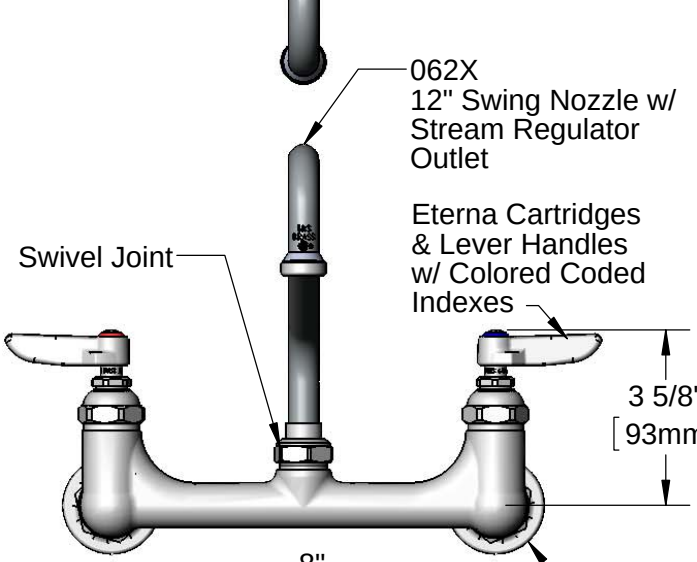

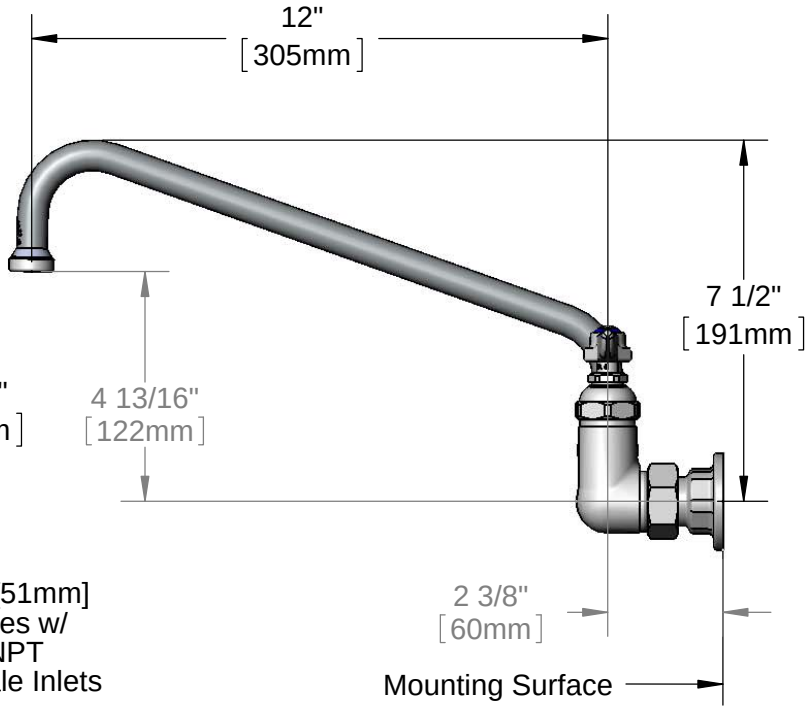

Product Specifications:

8" Wall Mount Mixing Faucet w/ Eterna Cartridges, Lever Handles, 12" Swing Nozzle & 1/2" NPT Female Inlets

Product Compliance:

ASME A112.18.1 / CSA B125.1
NSF 61 - Section 9
NSF 372 (Low Lead Content)
ANSI A117.1 (ADA)

Drawn: DHL	Checked: JRM	Approved: JHB	Date: 03/17/14	Scale: 1:4	Sheet: 1 of 2

T&S BRASS AND BRONZE WORKS, INC.

2 Saddleback Cove / P.O. Box 1088
Travelers Rest, SC 29690

Travelers Rest, SC: 800-476-4103 • Simi Valley, CA: 800-423-0150 • Fax: 864-834-3518 • www.tsbrass.com

Model No.

B-0231

Item No.

ITEM NO.	SALES NO.	DESCRIPTION
1	062X	12" Swing Nozzle
2	001048-45	Nozzle Tip Washer
3	B-PT	Stream Regulator Outlet
4	001661-45	Red Index-HW
5	005960-40	Eterna Cartridge, RTC
6	009538-45	Swivel Washer
7	011429-45	Swivel Sleeves (2)
8	001074-45	O-Ring
9	000922-45	Lever Handle Screw
10	001660-45	Blue Index-CW
11	001638-45	Lever Handle
12	005959-40	Eterna Cartridge, LTC
13	00AA	1/2" NPT Female Eccentric Flange
14	001019-45	Coupling Nut Washer
15	002713-40	Eterna Cartridge, LTC w/ Handle, Index & Screw
16	002714-40	Eterna Cartridge, RTC w/ Handle, Index & Screw

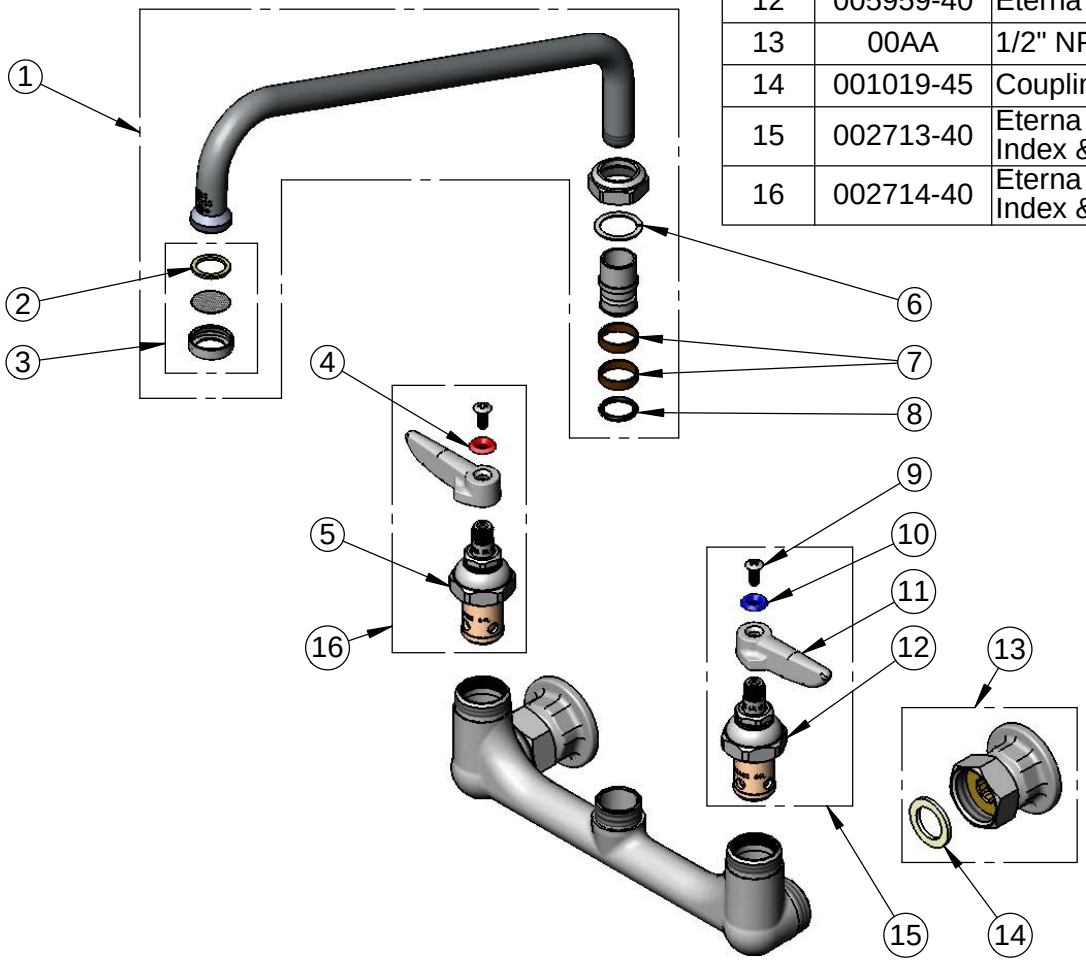

Product Specifications:

8" Wall Mount Mixing Faucet w/ Eterna Cartridges, Lever Handles, 12" Swing Nozzle & 1/2" NPT Female Inlets

Product Compliance:

ASME A112.18.1 / CSA B125.1
NSF 61 - Section 9
NSF 372 (Low Lead Content)
ANSI A117.1 (ADA)

Drawn: DHL	Checked: JRM	Approved: JHB	Date: 03/17/14	Scale: NTS	Sheet: 2 of 2

METRO®

SUPER ERECTA® AND SUPER ADJUSTABLE SUPER ERECTA®
Metroseal 3 Shelving

METRO® SEAL 3
with Microban® Antimicrobial Protection

Metroseal 3 is available on Super Erecta and Super Adjustable Super Erecta shelving systems. Metroseal 3 is applied using an exclusive state-of-the-art finishing and coating process that creates an attractive and corrosion-resistant finish. Metroseal 3 is enhanced with built-in Microban® antimicrobial product protection, which protects the Metroseal 3 coating from bacteria, mold, mildew and fungi that cause odors, stains and product degradation.

- **Exclusive Protection:** Metro's new proprietary epoxy coating now contains Microban® antimicrobial product protection. Microban® protects the epoxy coating from bacteria, mold, mildew and fungi that cause odors, stains and product degradation. The storage system remains cleaner between cleanings.
- **Attractive, Corrosion-Resistant Finish:** Metroseal 3 is an attractive corrosion-resistant finish that protects the shelving against corrosive conditions found in walk-in coolers.
- **Metro® Shelving Systems:** Metroseal 3 is a finish for the world's most popular shelving systems, Super Erecta and Super Adjustable Super Erecta. Both systems provide easy assembly without the use of special tools, adjustability at 1" (25mm) increments, greater air circulation and light penetration, a large selection of accessories, and the versatility to change as your storage needs change. Super Adjustable Super Erecta has the added feature of a unique patented corner release making it the easiest to adjust shelving system ever.
- **Economical:** Metroseal 3 storage shelving is an economical alternative to stainless steel, for use in environments that tend to corrode other metals.
- **12-Year Limited Warranty:** Metroseal 3 is a corrosion-resistant finish for environments which can cause other metals to corrode. Metroseal 3 has a 12-year limited warranty against rust formation.

Super Adjustable Super Erecta

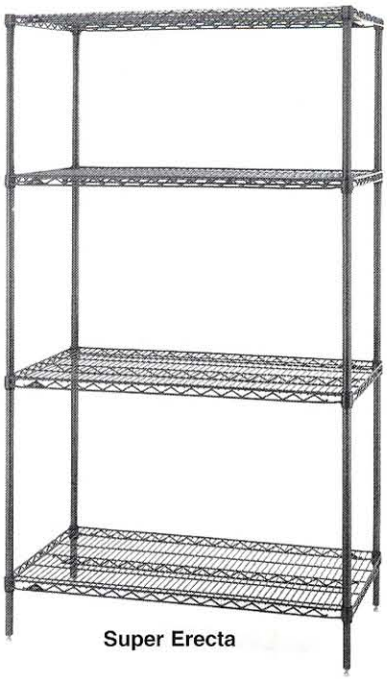

Super Erecta

NSF

*MICROBAN and the MICROBAN symbol are registered trademarks of the Microban Products Company, Huntersville, NC.

METRO®
InterMetro Industries Corporation
North Washington Street
Wilkes-Barre, PA 18705
www.metro.com

EMERSON
Storage Solutions

SUPER ERECTA® AND SUPER ADJUSTABLE SUPER ERECTA®

METROSEAL 3 SHELVING

Metroseal 3 Shelves

Cat. No. Super Adjustable	Cat. No. Super Erecta	Width (in.)	Width (mm)	Length (in.)	Length (mm)	Approx. Pkd Wt. (lbs.)	Approx. Pkd Wt. (kg)
A1424NK3	1424NK3	14	355	24	610	6	2.7
A1430NK3	1430NK3	14	355	30	760	7	3.2
A1436NK3	1436NK3	14	355	36	914	8	3.6
A1442NK3	1442NK3	14	355	42	1066	9 1/2	4.3
A1448NK3	1448NK3	14	355	48	1219	10 1/2	4.7
A1460NK3	1460NK3	14	355	60	1524	14	6.3
A1472NK3	1472NK3	14	355	72	1825	17	7.7
A1824NK3	1824NK3	18	457	24	610	7	3.2
A1830NK3	1830NK3	18	457	30	760	8	3.6
A1836NK3	1836NK3	18	457	36	914	9 1/2	4.3
A1842NK3	1842NK3	18	457	42	1066	11	5.0
A1848NK3	1848NK3	18	457	48	1219	12	5.4
A1854NK3	1854NK3	18	457	54	1370	14 1/2	6.6
A1860NK3	1860NK3	18	457	60	1524	17	7.7
A1872NK3	1872NK3	18	457	72	1825	20	9.1
A2124NK3	2124NK3	21	530	24	610	8	3.6
A2130NK3	2130NK3	21	530	30	760	9	4.1
A2136NK3	2136NK3	21	530	36	914	11	5.0
A2142NK3	2142NK3	21	530	42	1066	12	5.4
A2148NK3	2148NK3	21	530	48	1219	14	6.4
A2154NK3	2154NK3	21	530	54	1370	16	7.3
A2160NK3	2160NK3	21	530	60	1524	18	8.2
A2172NK3	2172NK3	21	530	72	1825	24	10.9
A2424NK3	2424NK3	24	610	24	610	9	4.1
A2430NK3	2430NK3	24	610	30	760	11	5.0
A2436NK3	2436NK3	24	610	36	914	13	5.9
A2442NK3	2442NK3	24	610	42	1066	15	6.8
A2448NK3	2448NK3	24	610	48	1219	16	7.3
A2454NK3	2454NK3	24	610	54	1370	19	8.6
A2460NK3	2460NK3	24	610	60	1524	21	9.5
A2472NK3	2472NK3	24	610	72	1825	26	11.8
A3036NK3		30	760	36	914	15	6.8
A3048NK3		30	760	48	1219	21	9.5
A3060NK3		30	760	60	1524	26 1/2	11.8
A3072NK3		30	760	72	1825	31	14.0
A3636NK3		36	914	36	914	18	8.2
A3648NK3		36	914	48	1219	23	10.4
A3660NK3		36	914	60	1524	29	13.1
A3672NK3		36	914	72	1825	34 1/2	15.4

SiteSelect™ Posts

Cat. No. Metroseal 3	Height* (in.)	Height* (mm)	Approx. Pkd. Wt. (lbs.)	Approx. Pkd. Wt. (kg)
13PK3	14 1/2	368	1	0.5
33PK3	34 1/2	877	2	0.9
54PK3	54 9/16	1386	3	1.4
63PK3	62 9/16	1589	3 1/2	1.6
74PK3	74 5/8	1895	4	1.8
86PK3	86 5/8	2200	5	2.3

*Height includes leveling bolt and cap.

Every Metroseal 3 shelf and post is backed by a limited 12-year warranty against surface rust formation.

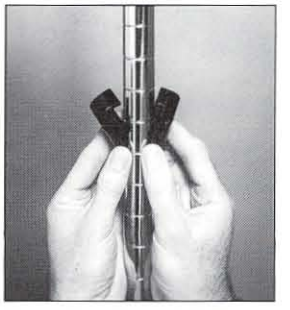

Super Erecta Split Sleeves

Super Adjustable Wedges and Corner Release System

Important: When ordering by components remember that stability decreases as the ratio of height to width increases. Units should be kept as wide and low as possible.

SiteSelect™ Posts are grooved at 1" (25mm) increments and numbered at 2" (50mm) increments. Posts are double-grooved every 8" (203mm) for easy identification.

All Metro Catalog Sheets are available on our Web Site: **www.metro.com**

InterMetro Industries Corporation
North Washington Street, Wilkes-Barre, PA 18705
Phone: 570-825-2741 • Fax: 570-825-2852
For Product Information Call: 1-800-433-2232

L02-010B
Printed in U.S.A. Rev. 11/02

Item # _____

Job _____

METRO®
STEM CASTERS

- **Metro Stem-Type Casters** are designed to fit Super Erecta Shelf® posts to form shelf carts and other mobile units.
- **Stainless Steel, Cart-Washable Casters** offer grease seals and zerk fittings. Can withstand high-pressure washings.
- **Polymer Horn Casters:** Innovative polymer stem casters offer corrosion resistance and enhanced durability. For all medium-duty applications.
- **Resilient Rubber Tread:** A molded, soft tread that provides good floor protection along with quiet operation. Non-marking.
- **Polyurethane Tread:** Long-wearing; resists abrasion. Non-marking, shock absorbing.
- **Wheel Brakes:** Foot-operated. Available on all caster models.
- **Caster Load Ratings:** From 125 lbs. to 300 lbs. (57 to 136kg) See chart.
- **Donut Bumpers:** Furnished standard on all Metro stem casters.
- **Additional Caster Types Available.**

Note: SPECIAL WHEELS — V-groove, Conductive, Steel and Phenolic — are available on request. For additional information, contact InterMetro Industries Corporation or your InterMetro representative.

Resilient Rubber

5MB Wheel Brake
Includes Donut Bumper (not shown)

5M Resilient
Includes Donut Bumper (not shown)

Stainless Steel, Cart Washable

5MDBGSA

5MDGSA

Polymer Horn Casters

5PCB

5PC

InterMetro Industries Corporation
North Washington Street
Wilkes-Barre, PA 18705
www.metro.com

Job _____

METRO®
STEM CASTERS

Dimensions
Standard Casters — Stem Type

Cat. No.	Wheel Diameter (in.)	Wheel Diameter (mm)	Face (in.)	Face (mm)	Load Rating (lbs.)	Load Rating (kg)	Type	Wheel Tread	Approx. Pkd. Wt. (lbs.)	Approx. Pkd. Wt. (kg)
4LD	4	102	1/2	12	125	56	Stem/Swivel	Resilient	1 1/2	.6
5LD	5	127	1/2	12	125	56	Stem/Swivel	Resilient	2	.9
5M	5	127	1 1/4	32	200	90	Stem/Swivel	Resilient	2 1/2	1.1
5MB	5	127	1 1/4	32	200	90	Stem/Brake	Resilient	2 3/4	1.2
5MR	5	127	1 1/4	32	200	90	Stem/Rigid	Resilient	3 1/2	1.5
5MDA	5	127	1 1/4	32	250	111	Stem/Swivel	High Modulus Donut	2 1/2	1.1
5MDBA	5	127	1 1/4	32	250	111	Stem/Brake	High Modulus Donut	2 5/8	1.17
5MDRA	5	127	1 1/4	32	250	111	Stem/Rigid	High Modulus Donut	2 3/8	1.08
5MP	5	127	1 1/4	32	300	135	Stem/Swivel	Polyurethane	2 1/8	.94
5MPB	5	127	1 1/4	32	300	135	Stem/Brake	Polyurethane	2 1/4	1
5MPR	5	127	1 1/4	32	300	135	Stem/Rigid	Polyurethane	2	.9

NOTE 1: Stem casters are shipped with donut bumper **at no additional charge.**
NOTE 2: Rigid casters are held in position by a connecting channel. When ordering rigid casters, shelf width **must be** known.
NOTE 3: Load Height for all 5M, 5MD and 5MP casters — 6 3/32" ± 1/16" (155 ± 1.5mm).
NOTE 4: Load Height for 4LD caster — 4 5/8" ± 1/16" (118 ± 1.5mm).
NOTE 5: Load Height for 5LD caster — 5 5/8" ± 1/16" (143 ± 1.5mm).
NOTE 6: Brakes are foot-operated.

Stainless Steel Cart-Washable Casters — Stem Type

Cat. No.	Wheel Diameter (in.)	Wheel Diameter (mm)	Face (in.)	Face (mm)	Load Rating (lbs.)	Load Rating (kg)	Type	Wheel Tread	Approx. Pkd. Wt. (lbs.)	Approx. Pkd. Wt. (kg)
5MDGSA	5	122	1 1/4	32	150	68	Swivel	High Modulus Donut	2 1/2	1.1
5MDBGSA	5	122	1 1/4	32	150	68	Brake	High Modulus Donut	2 5/8	1.17
5MDRGSA	5	122	1 1/4	32	150	68	Rigid	High Modulus Donut	2 3/8	1.08
5MPGSA	5	127	1 1/4	32	300	135	Swivel	Polyurethane	2 1/8	.94
5MPBGSA	5	127	1 1/4	32	300	135	Brake	Polyurethane	2 1/4	1
5MPRGSA	5	127	1 1/4	32	300	135	Rigid	Polyurethane	2	.9

NOTE 1: Stem casters are shipped with donut bumper **at no additional charge.**
NOTE 2: Rigid casters are held in position by a connecting channel. When ordering rigid casters, shelf width **must be** known.
NOTE 3: Load Height for all 5MD and 5MP casters — 6 3/32" ± 1/16" (155 ± 1.5mm).
NOTE 4: All casters are grease sealed with zerk fittings in swivel and axle.
NOTE 5: Brakes are foot-operated.
NOTE 6: "D" in model number designates donut wheel made of high-modulus rubber.

Polymer Casters — Stem Type

Cat. No.	Wheel Diameter (in.)	Wheel Diameter (mm)	Face (in.)	Face (mm)	Load Rating (lbs.)	Load Rating (kg)	Type	Wheel Tread	Approx. Pkd. Wt. (lbs.)	Approx. Pkd. Wt. (kg)
5PC	5	127	1 1/4	32	300	135	Swivel	Polyurethane	2	.9
5PCB	5	127	1 1/4	32	300	135	Brake	Polyurethane	2	.9
5PCR	5	127	1 1/4	32	300	135	Rigid	Polyurethane	2	.9

NOTE 1: Optional thread guards (blue) may be ordered by adding "-TG" to the desired model number (eg. 5PC-TG, 5PCB-TG, 5PCR-TG).
NOTE 2: Stem casters are shipped with donut bumper **at no additional charge.**
NOTE 3: Rigid casters are held in place by a connecting channel. When ordering, shelf depth **must be** provided.

Manufactured by:

InterMetro Industries Corporation
North Washington Street, Wilkes-Barre, PA 18705
Phone: 570-825-2741 • Fax: 570-825-2852
For Product Information Call: 1-800-433-2232
Visit Our Web Site: www.metro.com

L02-041
Rev. 9/00
Printed in U.S.A.

METRO®

SUPER ERECTA® AND SUPER ADJUSTABLE SUPER ERECTA®
Metroseal 3 Shelving

METRO® SEAL 3

with Microban® Antimicrobial Protection

Metroseal 3 is available on Super Erecta and Super Adjustable Super Erecta shelving systems. Metroseal 3 is applied using an exclusive state-of-the-art finishing and coating process that creates an attractive and corrosion-resistant finish. Metroseal 3 is enhanced with built-in Microban® antimicrobial product protection, which protects the Metroseal 3 coating from bacteria, mold, mildew and fungi that cause odors, stains and product degradation.

- **Exclusive Protection:** Metro's new proprietary epoxy coating now contains Microban® antimicrobial product protection. Microban® protects the epoxy coating from bacteria, mold, mildew and fungi that cause odors, stains and product degradation. The storage system remains cleaner between cleanings.
- **Attractive, Corrosion-Resistant Finish:** Metroseal 3 is an attractive corrosion-resistant finish that protects the shelving against corrosive conditions found in walk-in coolers.
- **Metro® Shelving Systems:** Metroseal 3 is a finish for the world's most popular shelving systems, Super Erecta and Super Adjustable Super Erecta. Both systems provide easy assembly without the use of special tools, adjustability at 1" (25mm) increments, greater air circulation and light penetration, a large selection of accessories, and the versatility to change as your storage needs change. Super Adjustable Super Erecta has the added feature of a unique patented corner release making it the easiest to adjust shelving system ever.
- **Economical:** Metroseal 3 storage shelving is an economical alternative to stainless steel, for use in environments that tend to corrode other metals.
- **12-Year Limited Warranty:** Metroseal 3 is a corrosion-resistant finish for environments which can cause other metals to corrode. Metroseal 3 has a 12-year limited warranty against rust formation.

Super Adjustable Super Erecta

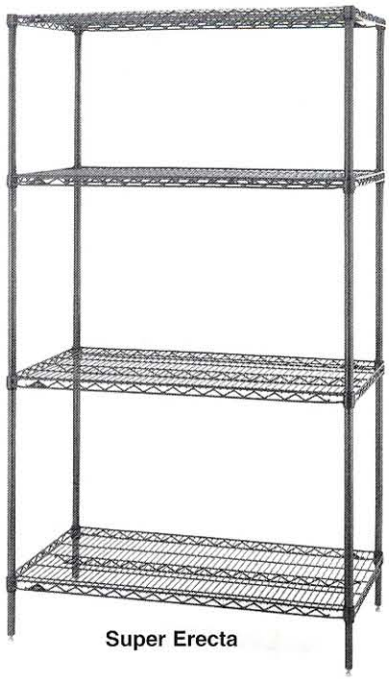

Super Erecta

NSF

*MICROBAN and the MICROBAN symbol are registered trademarks of the Microban Products Company, Huntersville, NC.

METRO®
InterMetro Industries Corporation
North Washington Street
Wilkes-Barre, PA 18705
www.metro.com

EMERSON
Storage Solutions

SUPER ERECTA® AND SUPER ADJUSTABLE SUPER ERECTA®

METROSEAL 3 SHELVING

Metroseal 3 Shelves

Cat. No. Super Adjustable	Cat. No. Super Erecta	Width (in.)	Width (mm)	Length (in.)	Length (mm)	Approx. Pkd Wt. (lbs.)	Approx. Pkd Wt. (kg)
A1424NK3	1424NK3	14	355	24	610	6	2.7
A1430NK3	1430NK3	14	355	30	760	7	3.2
A1436NK3	1436NK3	14	355	36	914	8	3.6
A1442NK3	1442NK3	14	355	42	1066	9 1/2	4.3
A1448NK3	1448NK3	14	355	48	1219	10 1/2	4.7
A1460NK3	1460NK3	14	355	60	1524	14	6.3
A1472NK3	1472NK3	14	355	72	1825	17	7.7
A1824NK3	1824NK3	18	457	24	610	7	3.2
A1830NK3	1830NK3	18	457	30	760	8	3.6
A1836NK3	1836NK3	18	457	36	914	9 1/2	4.3
A1842NK3	1842NK3	18	457	42	1066	11	5.0
A1848NK3	1848NK3	18	457	48	1219	12	5.4
A1854NK3	1854NK3	18	457	54	1370	14 1/2	6.6
A1860NK3	1860NK3	18	457	60	1524	17	7.7
A1872NK3	1872NK3	18	457	72	1825	20	9.1
A2124NK3	2124NK3	21	530	24	610	8	3.6
A2130NK3	2130NK3	21	530	30	760	9	4.1
A2136NK3	2136NK3	21	530	36	914	11	5.0
A2142NK3	2142NK3	21	530	42	1066	12	5.4
A2148NK3	2148NK3	21	530	48	1219	14	6.4
A2154NK3	2154NK3	21	530	54	1370	16	7.3
A2160NK3	2160NK3	21	530	60	1524	18	8.2
A2172NK3	2172NK3	21	530	72	1825	24	10.9
A2424NK3	2424NK3	24	610	24	610	9	4.1
A2430NK3	2430NK3	24	610	30	760	11	5.0
A2436NK3	2436NK3	24	610	36	914	13	5.9
A2442NK3	2442NK3	24	610	42	1066	15	6.8
A2448NK3	2448NK3	24	610	48	1219	16	7.3
A2454NK3	2454NK3	24	610	54	1370	19	8.6
A2460NK3	2460NK3	24	610	60	1524	21	9.5
A2472NK3	2472NK3	24	610	72	1825	26	11.8
A3036NK3		30	760	36	914	15	6.8
A3048NK3		30	760	48	1219	21	9.5
A3060NK3		30	760	60	1524	26 1/2	11.8
A3072NK3		30	760	72	1825	31	14.0
A3636NK3		36	914	36	914	18	8.2
A3648NK3		36	914	48	1219	23	10.4
A3660NK3		36	914	60	1524	29	13.1
A3672NK3		36	914	72	1825	34 1/2	15.4

SiteSelect™ Posts

Cat. No. Metroseal 3	Height* (in.)	Height* (mm)	Approx. Pkd. Wt. (lbs.)	Approx. Pkd. Wt. (kg)
13PK3	14 1/2	368	1	0.5
33PK3	34 1/2	877	2	0.9
54PK3	54 9/16	1386	3	1.4
63PK3	62 9/16	1589	3 1/2	1.6
74PK3	74 5/8	1895	4	1.8
86PK3	86 5/8	2200	5	2.3

*Height includes leveling bolt and cap.

Every Metroseal 3 shelf and post is backed by a limited 12-year warranty against surface rust formation.

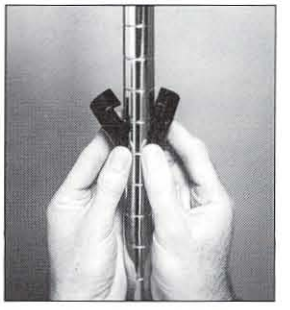

Super Erecta Split Sleeves

Super Adjustable Wedges and Corner Release System

Important: When ordering by components remember that stability decreases as the ratio of height to width increases. Units should be kept as wide and low as possible.

SiteSelect™ Posts are grooved at 1" (25mm) increments and numbered at 2" (50mm) increments. Posts are double-grooved every 8" (203mm) for easy identification.

All Metro Catalog Sheets are available on our Web Site: **www.metro.com**

InterMetro Industries Corporation
North Washington Street, Wilkes-Barre, PA 18705
Phone: 570-825-2741 • Fax: 570-825-2852
For Product Information Call: 1-800-433-2232

L02-010B
Printed in U.S.A. Rev. 11/02

Item # _____

Job _____

METRO®
STEM CASTERS

- **Metro Stem-Type Casters** are designed to fit Super Erecta Shelf® posts to form shelf carts and other mobile units.
- **Stainless Steel, Cart-Washable Casters** offer grease seals and zerk fittings. Can withstand high-pressure washings.
- **Polymer Horn Casters:** Innovative polymer stem casters offer corrosion resistance and enhanced durability. For all medium-duty applications.
- **Resilient Rubber Tread:** A molded, soft tread that provides good floor protection along with quiet operation. Non-marking.
- **Polyurethane Tread:** Long-wearing; resists abrasion. Non-marking, shock absorbing.
- **Wheel Brakes:** Foot-operated. Available on all caster models.
- **Caster Load Ratings:** From 125 lbs. to 300 lbs. (57 to 136kg) See chart.
- **Donut Bumpers:** Furnished standard on all Metro stem casters.
- **Additional Caster Types Available.**

Note: SPECIAL WHEELS — V-groove, Conductive, Steel and Phenolic — are available on request. For additional information, contact InterMetro Industries Corporation or your InterMetro representative.

Resilient Rubber

5MB Wheel Brake
Includes Donut Bumper (not shown)

5M Resilient
Includes Donut Bumper (not shown)

Stainless Steel, Cart Washable

5MDBGSA

5MDGSA

Polymer Horn Casters

5PCB

5PC

InterMetro Industries Corporation
North Washington Street
Wilkes-Barre, PA 18705
www.metro.com

Job _____

METRO®
STEM CASTERS

Dimensions
Standard Casters — Stem Type

Cat. No.	Wheel Diameter (in.)	Wheel Diameter (mm)	Face (in.)	Face (mm)	Load Rating (lbs.)	Load Rating (kg)	Type	Wheel Tread	Approx. Pkd. Wt. (lbs.)	Approx. Pkd. Wt. (kg)
4LD	4	102	1/2	12	125	56	Stem/Swivel	Resilient	1 1/2	.6
5LD	5	127	1/2	12	125	56	Stem/Swivel	Resilient	2	.9
5M	5	127	1 1/4	32	200	90	Stem/Swivel	Resilient	2 1/2	1.1
5MB	5	127	1 1/4	32	200	90	Stem/Brake	Resilient	2 3/4	1.2
5MR	5	127	1 1/4	32	200	90	Stem/Rigid	Resilient	3 1/2	1.5
5MDA	5	127	1 1/4	32	250	111	Stem/Swivel	High Modulus Donut	2 1/2	1.1
5MDBA	5	127	1 1/4	32	250	111	Stem/Brake	High Modulus Donut	2 5/8	1.17
5MDRA	5	127	1 1/4	32	250	111	Stem/Rigid	High Modulus Donut	2 3/8	1.08
5MP	5	127	1 1/4	32	300	135	Stem/Swivel	Polyurethane	2 1/8	.94
5MPB	5	127	1 1/4	32	300	135	Stem/Brake	Polyurethane	2 1/4	1
5MPR	5	127	1 1/4	32	300	135	Stem/Rigid	Polyurethane	2	.9

NOTE 1: Stem casters are shipped with donut bumper **at no additional charge.**
NOTE 2: Rigid casters are held in position by a connecting channel. When ordering rigid casters, shelf width **must be** known.
NOTE 3: Load Height for all 5M, 5MD and 5MP casters — 6 3/32" ± 1/16" (155 ± 1.5mm).
NOTE 4: Load Height for 4LD caster — 4 5/8" ± 1/16" (118 ± 1.5mm).
NOTE 5: Load Height for 5LD caster — 5 5/8" ± 1/16" (143 ± 1.5mm).
NOTE 6: Brakes are foot-operated.

Stainless Steel Cart-Washable Casters — Stem Type

Cat. No.	Wheel Diameter (in.)	Wheel Diameter (mm)	Face (in.)	Face (mm)	Load Rating (lbs.)	Load Rating (kg)	Type	Wheel Tread	Approx. Pkd. Wt. (lbs.)	Approx. Pkd. Wt. (kg)
5MDGSA	5	122	1 1/4	32	150	68	Swivel	High Modulus Donut	2 1/2	1.1
5MDBGSA	5	122	1 1/4	32	150	68	Brake	High Modulus Donut	2 5/8	1.17
5MDRGSA	5	122	1 1/4	32	150	68	Rigid	High Modulus Donut	2 3/8	1.08
5MPGSA	5	127	1 1/4	32	300	135	Swivel	Polyurethane	2 1/8	.94
5MPBGSA	5	127	1 1/4	32	300	135	Brake	Polyurethane	2 1/4	1
5MPRGSA	5	127	1 1/4	32	300	135	Rigid	Polyurethane	2	.9

NOTE 1: Stem casters are shipped with donut bumper **at no additional charge.**
NOTE 2: Rigid casters are held in position by a connecting channel. When ordering rigid casters, shelf width **must be** known.
NOTE 3: Load Height for all 5MD and 5MP casters — 6 3/32" ± 1/16" (155 ± 1.5mm).
NOTE 4: All casters are grease sealed with zerk fittings in swivel and axle.
NOTE 5: Brakes are foot-operated.
NOTE 6: "D" in model number designates donut wheel made of high-modulus rubber.

Polymer Casters — Stem Type

Cat. No.	Wheel Diameter (in.)	Wheel Diameter (mm)	Face (in.)	Face (mm)	Load Rating (lbs.)	Load Rating (kg)	Type	Wheel Tread	Approx. Pkd. Wt. (lbs.)	Approx. Pkd. Wt. (kg)
5PC	5	127	1 1/4	32	300	135	Swivel	Polyurethane	2	.9
5PCB	5	127	1 1/4	32	300	135	Brake	Polyurethane	2	.9
5PCR	5	127	1 1/4	32	300	135	Rigid	Polyurethane	2	.9

NOTE 1: Optional thread guards (blue) may be ordered by adding "-TG" to the desired model number (eg. 5PC-TG, 5PCB-TG, 5PCR-TG).
NOTE 2: Stem casters are shipped with donut bumper **at no additional charge.**
NOTE 3: Rigid casters are held in place by a connecting channel. When ordering, shelf depth **must be** provided.

Manufactured by:

InterMetro Industries Corporation
North Washington Street, Wilkes-Barre, PA 18705
Phone: 570-825-2741 • Fax: 570-825-2852
For Product Information Call: 1-800-433-2232
Visit Our Web Site: www.metro.com

L02-041
Rev. 9/00
Printed in U.S.A.

ADVANCE TABCO
SMART FABRICATION™

STAINLESS STEEL

FABRICATED FLOOR MOP SINKS

Item #: _____ Qty #: _____
Model #: _____
Project #: _____

Standard Mop Sink
9-OP-20 Shown

Drop Front Mop Sink
9-OP-40DF Shown

FEATURES:

Floor mounted unit eliminates the need of lifting heavy containers.
Tile edge furnished on the rear.
Bowls rectangular in design for increased capacity.
K-16 Free Flow Drain is included with each mop sink.
-DF models feature a notched out front which allows for ease of emptying mop bucket)

CONSTRUCTION:

All TIG welded.
Welded areas blended to match adjacent surfaces and to a satin finish.

MATERIAL:

16 Gauge type "304" series stainless steel sink bowl & Apron.

Notched Out Front Allows Ease of Emptying Mop Bucket

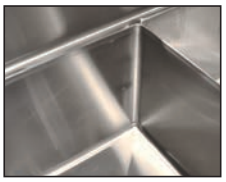

Fabricated Bowls are Welded Together at the Seams

	Model #	Bowl Size (A x B x C)	O.A. Dimension (W x L x H)	Drain Distance (E)	Drain Distance (F)	Approx. Wt.	Approx. Cu.
STANDARD	9-OP-18	15" x 15" x 10"	18" x 18" x 14"	9"	9"	30 lbs.	4
	9-OP-20	16" x 20" x 6"	21" x 25" x 10"	10-1/2"	12-1/2"	33 lbs.	4
	9-OP-28	20" x 28" x 6"	25" x 33" x 10"	12-1/2"	16-1/2"	47 lbs.	7
	9-OP-40	16" x 20" x 12"	21" x 25" x 16"	10-1/2"	12-1/2"	45 lbs.	6
	9-OP-48	20" x 28" x 12"	25" x 33" x 16"	12-1/2"	16-1/2"	62 lbs.	9
LARGE BOWL	9-OP-44	24" x 24" x 12"	29" x 29" x 16"	12-1/2"	16-1/2"	70 lbs.	9
	9-OP-33	24" x 36" x 12"	29" x 41" x 16"	12-1/2"	20 1/2"	73 lbs.	9
	9-OP-34	24" x 48" x 12"	29" x 53" x 16"	12-1/2"	20 1/2"	76 lbs.	9
DROP FRONT	9-OP-40DF	16" x 20" x 12"	18-1/2" x 25" x 16"	10-1/2"	12-1/2"	85 lbs.	9
	9-OP-48DF	20" x 28" x 12"	22-1/2" x 33" x 16"	12-1/2"	16-1/2"	110 lbs.	15

MOP SINK ACCESSORIES

16" High Side & Back Splashes for 9-OP Series Mop Sinks

Splashes on All 3 Sides

Model #	Fits Units:	Model #	Fits Units:
K-298	9-OP-20 9-OP-40	K-298D	9-OP-40DF
K-299	9-OP-28 9-OP-48	K-299D	9-OP-48DF
K-300	9-OP-44	-	-

Splash on Left or Right & Back

Model #	Fits Units:	Model #	Fits Units:
K-288LorR	9-OP-20 9-OP-40	K-288LorRD	9-OP-40DF
K-290LorR	9-OP-28 9-OP-48	K-290LorRD	9-OP-48DF
K-291LorR	9-OP-44	-	-

Height Above Finished Floor (A.F.F.)
9-OP-20/9-OP-28 = 26" High 9-OP-40/9-OP-40DF/9-OP-44/9-OP-48/ 9-OP-48DF = 32" High

Left & Right Splashes Shown

K-16 Replacement drain for floor mop sinks
K-240 Service Faucet*
K-242 23" wide mop hanger
K-243 Stainless steel mop drainage tray
K-244 Hose and hanger
K-245 8" x 24" utility shelf
K-246 8" x 36" utility shelf

*Does not meet Federal Lead Free Standards as it is not intended for potable water.

K-243

K-240

K-245

K-242

K-16

K-244

ADVANCE TABCO
SMART FABRICATION™
www.advancetabco.com

Customer Service Available To Assist You 1-800-645-3166 8:30 am - 8:00 pm E.S.T.

For Orders & Customer Service:
Email: customer@advancetabco.com or **Fax:** 631-242-6900

For Smart Fabrication™ Quotes:
Email: smartfab@advancetabco.com or **Fax:** 631-586-2933

DIMENSIONS and SPECIFICATIONS

TOL Overall: ± .500”
Interior: ± .250”

ALL DIMENSIONS ARE TYPICAL

STANDARD MOP SINK

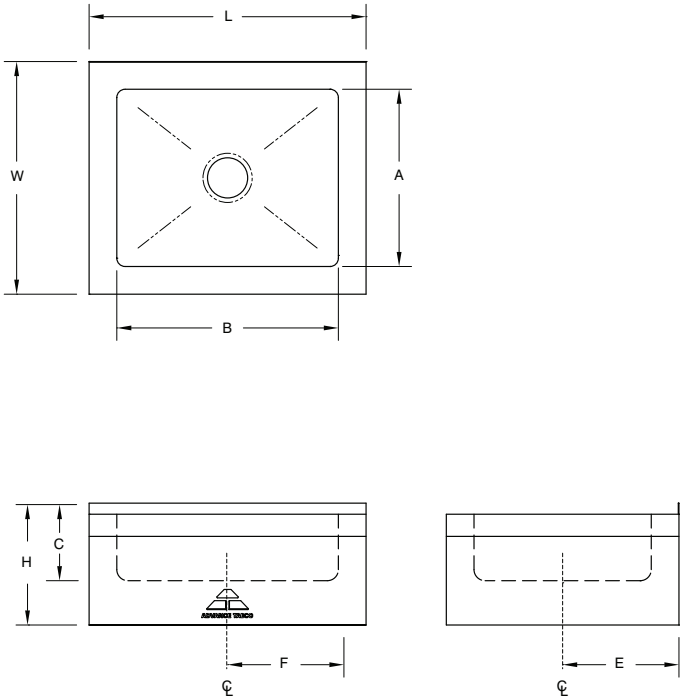

DROP FRONT MOP SINK

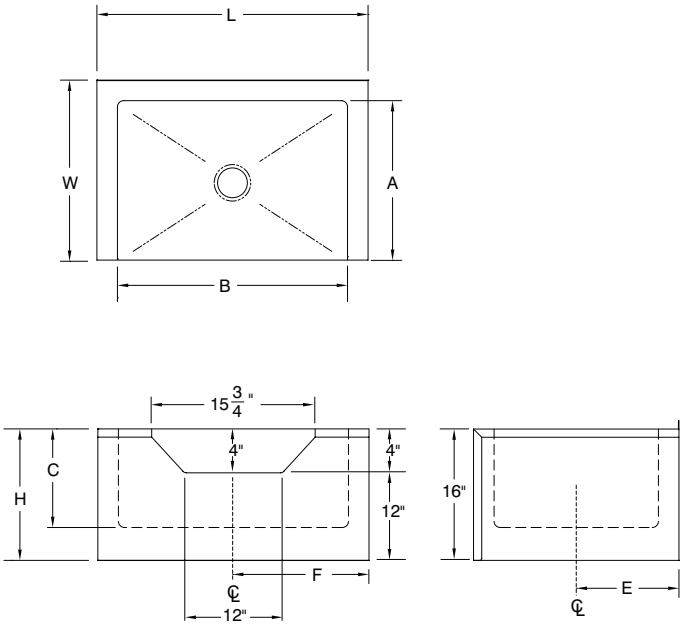

SUGGESTED INSTALLATION

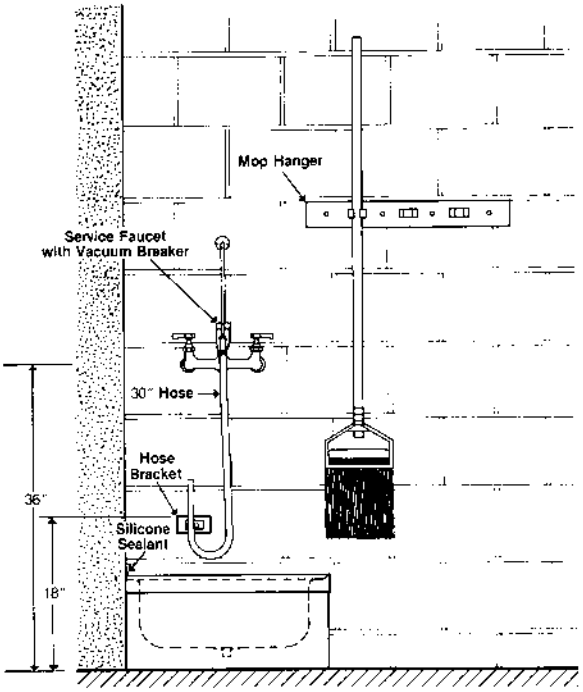

MOP SINK DRAIN ASSEMBLY

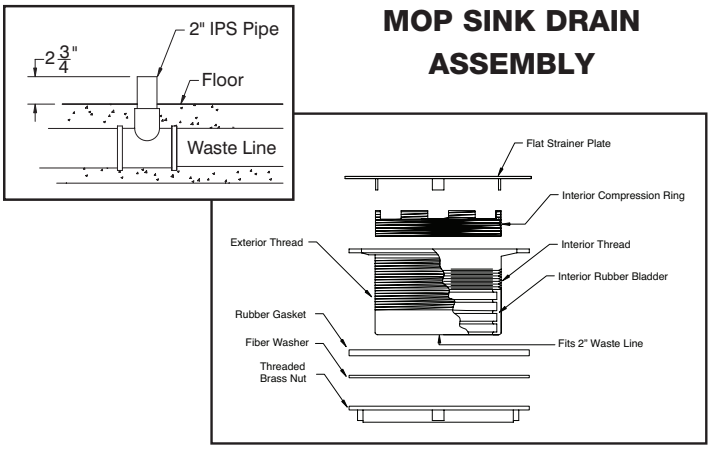

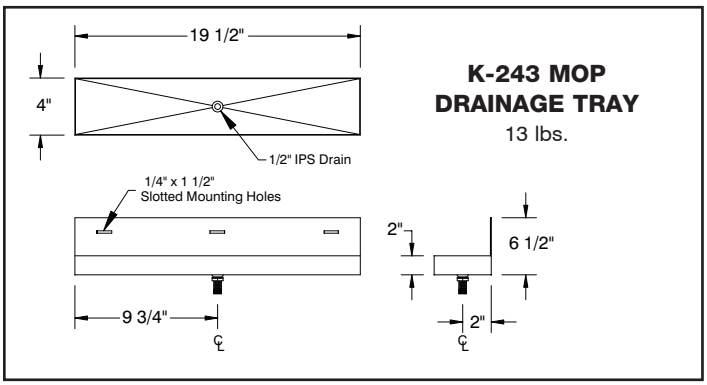

K-243 MOP DRAINAGE TRAY
13 lbs.

ADVANCE TABCO
SMART FABRICATION™

325 Wireless Boulevard, Hauppauge, NY 11788

ADVANCE TABCO is constantly engaged in a program of improving our products. Therefore, we reserve the right to change specifications without prior notice.

T&S BRASS AND BRONZE WORKS, INC.
2 SADDLEBACK COVE / P.O. BOX 1088 / TRAVELERS REST, SC 29690
PHONE 800-476-4103 - FAX 864- 834-3518

REG.#A2601
ISO #9001

Sales No. 54
EW-7360B

RELIABILITY BUILT IN

Job Name:

Architect/Engineer Approval:

Notes:

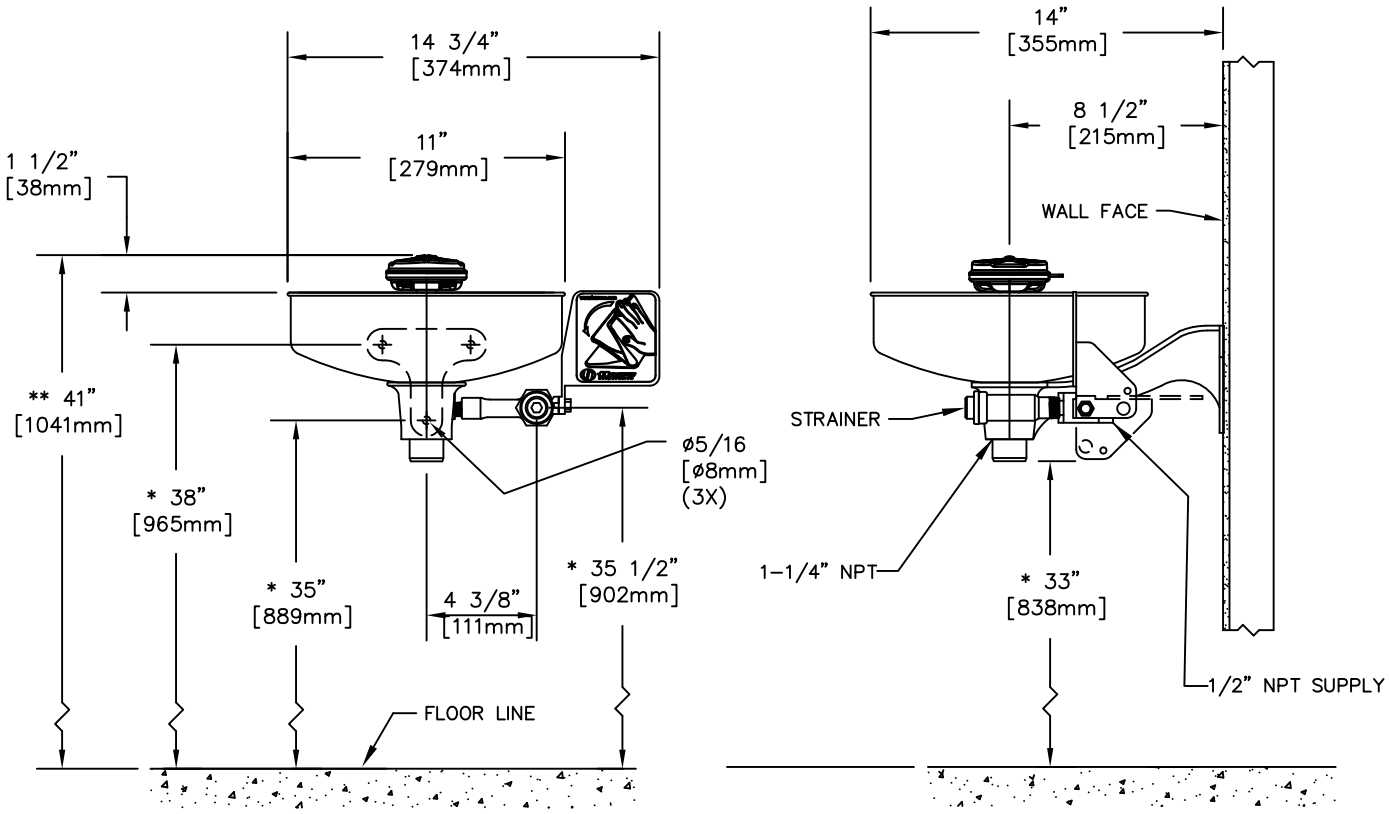

NOTES:

1. ** ANSI STANDARD Z358.1 SPECIFIES EYEWASH NOZZLES TO BE 33" [838mm] TO 45" [1143mm] ABOVE THE FLOOR.

2. * THESE DIMENSIONS ARE FOR REFERENCE

Product Description:	Drawn:	Checked	Scale:
EYEWASH, WALL MOUNT	DMH	GEF	1:8
	Approved		Date:
	JHB		12/20/10

T&S BRASS AND BRONZE WORKS, INC.
2 SADDLEBACK COVE / P.O. BOX 1088 / TRAVELERS REST, SC 29690
PHONE 800-476-4103 - FAX 864- 834-3518

Sales No.
EW-9201EF

RELIABILITY BUILT IN

Job Name:

Architect/Engineer Approval:

Notes:

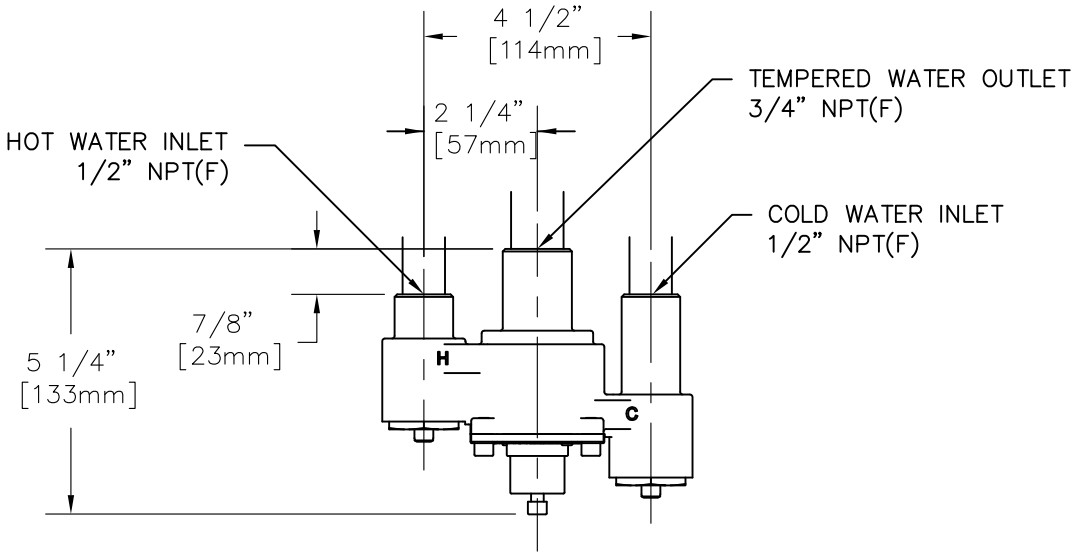

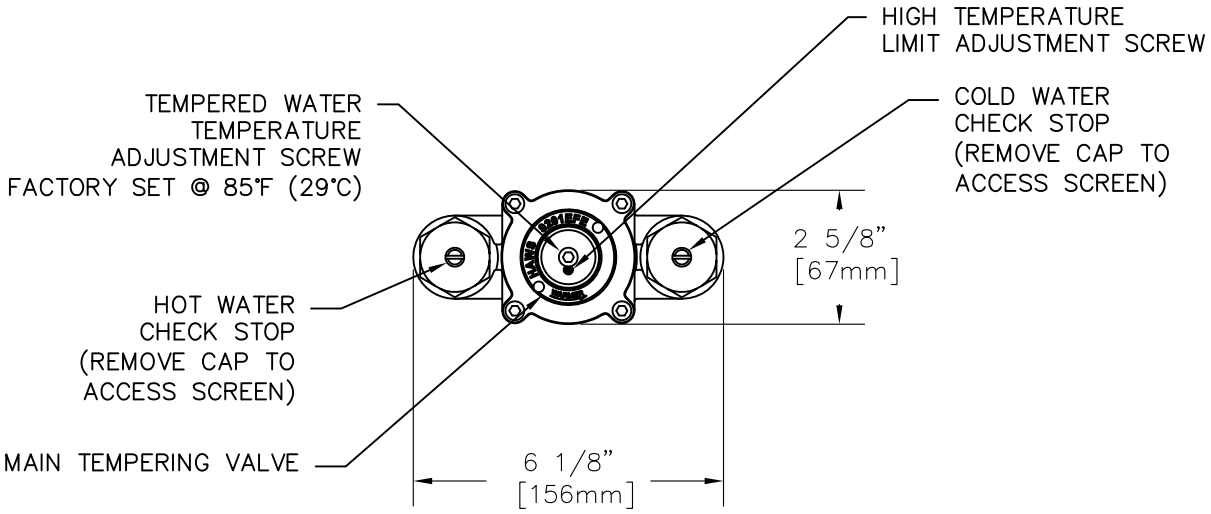

NOTES:

1. THERMOSTATIC MIXING VALVE TO SUPPLY TEMPERED WATER FROM 1 TO 12 GPM.

2. INLETS 1/2" NPT, OUTLET 3/4" NPT.

Product Description:	Drawn:	Checked	Scale:
THERMOSTATIC MIXING VALVE	DMH	KJG	1:4
	Approved		Date:
	JHB		11/21/12

SECTION 114000 – FOOD SERVICE EQUIPMENT

PART 1 – GENERAL

1.1 SECTION INCLUDES

A. This section includes food service equipment, as indicated on food service “FS” series of drawings and was prepared by Food Facilities Concepts, Inc. of Carnegie, Pennsylvania.

1.2 RELATED DOCUMENTS

A. Drawings and other general provisions of Contract, including General and Supplementary Conditions and Division -1 Sections, apply to this Section.

B. Division 22 Sections: Required drain traps, steam traps, atmospheric vents, valves, pipes and pipe fittings, duct work, and other materials necessary to complete mechanical hook up of food service equipment.

C. Division 26 Sections: Wiring, disconnects, and other materials necessary to complete electrical hook up of food service equipment.

D. Division 23 Sections: Ductwork, fans, drives and other materials necessary to complete the mechanical venting hook up of food service equipment.

E. Food service equipment cutbook provided as a supplement to the 11 40 00 specifications.

F. Refer to the scope of work matrix shown on the food service equipment drawings and this specification sections for scope of work related to the food service equipment, permitting, and general utility requirements. All drawings, specifications, product data, and documents as required for permitting is the responsibility of the food service equipment contractor to provide. All of these documents used for permitting are to be the submittal and shop drawings required for this scope of work and are to be the documents that are reviewed and stamped “Approved” or “Approved as Noted”.

1.3 SUBMITTALS

A. Food Service Equipment Contractor shall coordinate submittal due dates with the Construction Schedule for this Project. The food service consultants review may take up to 15 business days. It is the contractor’s responsibility to provide the submittals in accordance with the project’s schedule and the food service consultants review timeframe note above.

B. Submit product data and installation instructions for each item; include rough-in dimensions, service connection requirements, performances, materials, manufacturers' model numbers,

furnished accessories, power/fuel requirements, water/drainage requirements, and other similar information.

C. Submit shop drawings including dimensioned rough-in drawings showing mechanical and electrical requirements. Submit dimensioned refrigeration system, walk-in cooler/freezer, hood, hood fire suppression, fabrication drawings for custom fabricated equipment including plans, elevations, and sections, showing materials and gauges used and any other shop drawings requested in the itemized specification section.

D. All shop drawings to be produced in electronic CAD or BIM software and submitted in PDF format. All drawings must be submitted in black and white. Shop drawings containing line color other than black will be rejected. Shop drawings to be submitted as one complete package. Shop drawings will be held and not reviewed until the entire package is received. Drawings to be submitted as one complete package using individual submittal numbers for each set of drawings. Electronic files with information beyond wall and equipment layout will not be made available to the contractor(s) under any circumstance. Schedules, rough-in layouts, general details, fabrication drawings will not be made available.

E. Submit maintenance data and parts list for each item of food service equipment. Include these data, product data, shop drawings, and wiring diagrams in maintenance manuals. Two copies of the manual are to be provided.

1.4 QUALITY ASSURANCE

A. Manufacturers' Qualifications: Firms regularly engaged in manufacturer of food service equipment of types, capacities and sizes required, whose products have been in satisfactory use, in similar service, for not less than five projects.

B. Installer's Qualifications: Engage an experienced installer who has completed food service similar in material, design, and extent to that indicated, for a project that has resulted in construction, with a record of successful in-service performance.

C. Codes and Standards:

1. NSF Standards: Comply with applicable National Sanitation Foundation (NSF) standards and recommended criteria. Provide each principal item of food service equipment with a NSF "seal of approval".
2. UL Labels: Where available, provide UL labels on prime electrical components of food service equipment. Provide UL "recognized marking" on other items with electrical components, signifying listing by UL, where available.
3. ANSI Standards: Comply with applicable ANSI standards for electric powered and gas burning appliances, for piping to compressed gas cylinders, and for plumbing fittings, including vacuum breakers and air gaps, to prevent siphonage in water piping.
4. NFPA Codes: Install food service equipment in accordance with the latest version of the following National Fire Protection Association (NFPA) codes:
   a. NFPA 54 - National fuel gas code.

b. NFPA 70 - National electrical code
c. NFPA 96 - Removal of smoke and grease-laden vapors from commercial cooking equipment.

5. ASME Boiler Code: Construct steam-generating and closed steam heating equipment to comply with American Society of Mechanical Engineers (ASME) boiler and pressure vessel code; Section IV for units not exceeding 15 PSI or 250° F (121° C), or Section I for higher pressure/temperature units.

1.5 DELIVERY, STORAGE AND HANDLING

A. Deliver food service equipment in containers designed to protect equipment and finish until final installation. Make arrangements to receive equipment and hold in warehouse until delivery can be made to job site.

B. Store food service equipment in original containers and in location to provide adequate protection to equipment while not interfering with other construction operations.

C. Handle food service equipment to avoid damage to components, enclosures and finish. Do not install damaged food service equipment; replace and return damaged components to equipment manufacturer.

1.6 PROJECT CONDITIONS

A. Take field measurements to assure accurate fit of fabricated equipment.

B. Check electrical characteristics and water, steam and gas pressure. Provide pressure regulating valves where required for proper operation of equipment.

C. Electrical Requirements: Provide motors and heating elements with the following electrical characteristics, if not otherwise indicated:

1. Motors 1/2 HP and smaller: 120/1/60.
2. Motors 3/4 HP and larger: 208/3/60.
3. Heating elements 1500 watts and smaller: 120/1/60.
4. Heating elements over 1500 watts: 208/3/60.

1.7 REFRIGERATION WARRANTY

A. Special Project Warranty: Provide written warranty, signed by manufacturer, agreeing to replace/repair, within warranty period, refrigeration compressors with inadequate and defective materials and workmanship, including leakage, breakage, improper assembly, or failure to perform as required, provided manufacturer's instructions for handling, installing, protecting and maintaining units have been adhered to during warranty period. This warranty shall be in addition to, and not a limitation of, the rights the Owner may have against the contractor under the Contract Documents.

1. Warranty Period: 5 years from date of substantial completion.

B. All equipment items containing refrigerated components are to include a minimum one-year parts and labor, five-year compressor warranty.

PART 2 – PRODUCTS

2.1 FOOD SERVICE EQUIPMENT SCHEDULE

A. Refer to "Part 4 - Itemized Specifications" at the end of this section and the equipment schedules listed on the food service drawings for the food service equipment required for this project. Refer to the food service drawings for location of the items. Where discrepancies exist in quantity or size between drawings and specifications, the larger quantity/size must be considered as the correct information

2.2 MATERIALS

A. Stainless Steel: ANSI Type 304. Provide non-magnetic sheets, free of buckles, waves and surface imperfections. Provide No. 4 polished finish for exposed surfaces.

1. Provide protective covering on polished surfaces of stainless steel sheet work, and retain/maintain until time of final testing, cleaning, start up and substantial completion.

B. Galvanized Sheet Steel: ASTM A 526, except ASTM A 527 for extensive forming; ASTM A 525, G90 zinc coating, chemical treatment.

C. Sheet Steel: ASTM A 569 hot rolled carbon steel.

D. Stainless Steel Tube: ASTM A 554, type 304 with No. 4 polished finish.

E. Aluminum: ASTM B 209 sheet and plate, ASTM B 221 extrusions, 0.40 mill clear anodized finish where exposed, unless otherwise indicated.

F. White Metal: Corrosion resistant metal containing not less than 21 percent nickel. Make castings free from pit marks, runs, checks, burrs and other imperfections; rough grind, polish and buff to bright luster.

1. In lieu of white metal castings, 18-8 stainless steel die cast or stamped may be used.

G. Plastic Laminate: NEMA LD3, general purpose high pressure type, 0.05 inch thick except 0.042 inch thick for flat work and post forming, smooth texture, and color white unless otherwise indicated.

H. Plastic Materials and Components: Except for plastic laminate, provide plastic materials and components that comply with NSF 51.

I. Hardwood Work Surfaces: Laminated edge-grained hard maple (acer Saccharum), NHLA first grade with knots, holes and other blemishes culled out, kiln dried at 8 percent or less moisture, waterproof glue, machined, sanded and finished with NSF approved oil sealer.

J. Sound Deadening: Heavy bodied resinous coating, filled with granulated cork or other resilient material, compounded for permanent, non-flaking adhesion to metal in 1/8 inch thick coating.

1. Apply coating of sound deadening material to underside of tops, drainboards, dishtables and sinks.

K. Sealants: ASTM C 920; Type S, Grade NS, Class 25, Use NT. Provide sealant, that when fully cured and washed, meets requirements of Food and Drug Administration regulation 21 CFR 177.2600 for use in areas where it comes in contact with food.

1. Color: As selected by architect with manufacturer's standard colors.
2. Backer rod: Closed-cell polyethylene rod stock, larger than joint width.

L. Gaskets: Solid or hollow (not cellular) neoprene or PVC; light gray, minimum 40 shore A hardness, self-adhesive or prepared for either adhesive application or mechanical anchorage.

M. Solid Surface Material: Solid surface material to be ½" thick or as noted on drawings. Material to be installed in accordance with manufacturer's recommendations. Color sections and finishes to be as noted on the drawings.

2.3 FABRICATED PRODUCTS

A. Refrigerator Hardware: Heavy duty, die cast zinc, chrome plated and polished.

1. Hinges: Edge mounted, self-closing type.
2. Latches: Edge mounted, arranged for locking devices.

B. Handles and Pulls: Provide stainless steel handles with No. 4 finish, or die cast zinc with polished chrome-plated finish. Provide die stamped stainless steel pulls, recessed rectangular type, with beveled edge frame.

C. Door Slides: Provide stainless steel or galvanized steel door slides with minimum load capacity of 100 pounds per pair, and with positive door stop. Provide ball bearing rollers.

D. Hinges: Provide stainless steel hinges, continuous type or butt type as indicated.

E. Sliding Door Hardware: Provide extruded aluminum door track. Provide galvanized steel door sheave with nylon surface and ball bearing inner races. Provide stainless steel bottom guide pins, spring loaded.

F. Adjustable Shelf Supports: Provide stainless steel shelf supports, snap in type, and stainless steel brackets with countersunk mounting holes.

G. Catches: For hinged doors, provide permanent magnetic catch of sufficient strength to hold door shut.

H. Locks: Manufacturers standard brass 5-pin cabinet type lock. Provide two keys for each lock, keyed separately.

I. Lever Drains: Provide 2-inch, heavy cast bronze body, removable flat stainless steel strainer, twist handle waste outlet, and one piece connected chrome plated brass overflow.

J. Casters: Provide minimum 4-inch diameter wheel casters with 1 1/8 inch tread width, complying with NSF standards. Provide sealed, self-lubricating bearings, cadmium plated or bright zinc plated steel disc wheels, and solid synthetic rubber tires. Provide foot brakes on 2 casters per unit.

2.4 FABRICATION OF EQUIPMENT

A. The following is a list of approved custom fabricators:

1. Keystone Custom Fabricators - Elizabeth, PA (412) 384-9131
2. Bova Corporation – Valencia, PA (724) 898-0288
3. Commercial Stainless – Bloomsburg, PA (570) 387-8980
4. BrassSmith – Denver, CO (303) 331-8777

The Architect and Food Service Consultant reserves the right to accept or reject any non-listed custom fabrication manufacturer. Any deviation from the approved list of fabricators will require written authorization from the Food Service Consultant prior to submitting a bid using pricing from a non-listed fabricator. All references to provided must be members of Foodservice Consultants Society International.

B. Tops: Fabricate of 14 gauge stainless steel, with exposed edges rolled on 1 1/2 inch diameter radius, and with corners bullnosed. Where tops are adjacent to walls or adjoining equipment, turn up ten inches and back two inches on a 45-degree angle, unless otherwise indicated.

1. Backsplashes: Cove horizontal and vertical corners.

C. Dishtables and Drainboards: Fabricate of 14 gauge stainless steel, with exposed edges formed into 1 1/2 inch by 180 degrees rolled rim, approximately 3 inches high. Provide built in pitch of 1/2-inch minimum. Provide ten inch high backsplashes with 2 inch return on 45 degree angle or 1 1/2 inch diameter rolled rim, as indicated. Construct front rim and backsplash on drainboards with continuous level plane with sink it adjoins. Support drainboards up to 36 inches in length, by 1-inch diameter stainless steel tube welded to underside of drainboard and leg gusset. Support drainboards 36 inches and longer with legs. Cove horizontal and vertical corners with not less than 3/4-inch radius.

D. Framing: Mount tops on 4 inch wide by 14 gauge stainless steel channels.

1. Run framework around entire perimeter of unit, and cross brace on centers. For dishtables and drainboards, run framing from front to back at each leg location, and run additional channel lengthwise, located at center of table width and welded to leg channels. Fasten framing to underside of top surfaces with 1/4-inch studs welded at approximately 12-inch centers. Provide each stud with suitable chrome plated lockwashers and capnuts, and make stud lengths such that capnuts can be made up tight bringing top down snugly to framing.

E. Legs and Cross Rails: Construct legs of 1 5/8 inch OD by 16 gauge stainless steel tubing, with fully enclosed stainless steel bullet shaped adjustable foot with minimum adjustment of 1 inch up or down without any threads showing. Fasten legs to 4-inch high stainless steel gusset with top completely sealed by means of stainless steel plate. Weld gusset continuously to bottom of unit framing. Construct cross rails of 1 1/4 inch O.D. by 16-gauge stainless steel tubing. Weld cross rails continuously to legs, grind and polish until smooth.

F. Drawers: Lift out type drawer body, one piece 20 inch by 20 inch by 5 inch die stamped of 18 gauge stainless steel, with inside radiused corners. Construct front of double pan stainless steel, 16-gauge exterior and 20-gauge interior. Provide lock for each drawer.

1. Fasten drawer suspension guides to 16-gauge stainless steel housing suspended from angle framing under fixed top.

G. Cabinet Bodies: Construct of 18 gauge stainless steel, with end panels formed with round corners for freestanding units, and square corners for fixtures that adjoin walls or other fixtures. Provide 90-degree retentions on end panels at front and rear, turned in toward body of cabinet and welded for reinforcement. For cabinets with open shelving, provide double wall inner panels. Weld ends to horizontal angle or channel members to form integral cabinet base. Provide backs of same material as ends, with vertical edges turned in to match edges of ends. Weld making flush joint.

H. Inserts: Where cold pans and other inserts are to be installed in cabinet bases, provide apron full depth of insert and of same material as bodies with reinforced openings as required. Form in openings on all sides.

I. Sliding Doors: Construct of 18 gauge stainless steel, with edges formed into channel extending around all sides, forming doors 7/8 inch thick. Insert sound deadening material, and enclose with stainless steel back panel with welded corner joints.

1. Mount doors on sliding door hardware.
2. Construct doors so as to be removable for cleaning purposes, and provide with stops. Provide, on each door, recessed stainless steel pulls and locks.

J. Hinged Doors: Construct same as sliding doors. Mount on stainless steel continuous type hinges, fitted with stainless steel pulls, magnetic catches and locks. Construct so that door face is flush with cabinet body.

K. Shelves: Construct of 14-gauge stainless steel.

1. Bottom shelves: Extend forward and turn down at front so as to be flush with front facing of cabinet.
2. Fixed intermediate shelves: Weld to front stiles and to 14 gauge stainless steel brackets so that shelf is 1 inch away from back and ends of cabinet.
3. Adjustable shelves: Channel on all four sides, weld corners, and mount on removable stainless steel standards.

L. Open Base Shelving: Construct of 16 gauge stainless steel with edges rolled down on open sides, and 2 inch turn up with 3/4 inch radius on rear and ends where adjacent to walls and other equipment. Neatly notch corners and weld to legs. Reinforce shelving longitudinally with 14 gauge formed channel welded to underside. Construct removable shelves as above, but fit over cross rails. Do not exceed shelving sections of 30 inches long; where one section abuts another, turn down edges one inch.

M. Wall Shelves: Construct of 16 gauge stainless steel with 1 1/2 inch roll on front and exposed ends, and with 2 inch turn up on back and ends where adjacent to walls or other fixtures. Weld all corners. Construct wall brackets of 14-gauge stainless steel with 1 1/2-inch flange at wall and completely welded to underside of shelf. Fasten each bracket to wall with minimum of two 1/2- inch bolts anchored to wall. Fasten shelf to wall bracket by means of studs welded to shelf, and secure with lockwasher and chrome plated cap nuts. Install so that shelf sets 1 1/2 inch away from the wall.

N. Overshelves: Set shelves mounted over equipment, not adjacent to walls, on 1 inch by 14 gauge stainless steel tubular standards fitted with stainless steel base flanges. Completely weld top of tubular standards to 14 gauge stainless support channels, run channels full width of overshelf. Run 1/2-inch steel tension rods through counter tops and reinforcing angle framing, secure with nuts and lockwashers to assure stable sway-free structure.

1. Where shelves are mounted over drainboards or dish tables, mount on upturned, rolled edges, omitting flanges, and scribe lower end of tube to match contour of roll.

O. Sinks: Fabricate from 14 gauge stainless steel with interior corners rounded to 1 inch radius, both horizontally and vertically, forming cove in bottom. Construct with butt-edge joints, welded and ground smooth so no evidence of welding will appear. Divide multiple compartment sinks with double wall 14 gauge stainless steel partitions rounded to 1/2 inch radius on top and having corners rounded same as other corners in sinks, continuously welded in place with welds ground smooth and polished. Provide back, bottom and front of one continuous piece with no overlapping joints or open spaces between compartments. Pitch bottom of each compartment and crease to die stamped recess to receive lever type drain, without use of solder, rivets or welding.

1. Finish front and exposed ends of sink with 1 1/2 inch 180 degree rolled edge. Finish back and ends adjacent to walls or other fixtures with splash back. Punch back splash back to receive wall mounted faucets.
2. For sinks in worktops, construct as above, but omit roll edges with splash backs. Fabricate bowl so as to be flush with work surfaces.

P. Cold Pans: Fabricate with 14-gauge stainless steel lining and 20 gauge stainless steel casing. Cove interior horizontal and vertical corners. Insulate sides, ends and bottom with material thermally equal to 2-inch thickness of fiberglass. Sweat 1/2-inch diameter copper cooling coils to underside of cold pan, and seal in thermostatic material. Turn down countertop 1 inch into pan. Install completely concealed 1-inch wide plastic breaker strip. Install 1-inch chrome plated drain with plug. Provide 1/2 inch high false bottom of 14 gauge perforated stainless steel in removable sections.

2.5 EXHAUST HOOD FABRICATION

A. Comply with NFPA 96, including appendix A.

B. Grease Removal: Provide grease removal devices as called for in the itemized specifications.

C. Light Fixtures: Provide light fixtures as called for in the itemized specifications.

2.6 REFRIGERATION EQUIPMENT

A. Provide refrigeration condensing units of size and capacities as indicated, consisting of compressors, condensers, receivers, motors, mounting bases, vibration isolators, refrigeration components, safety devices, electrical controls, refrigerant and protective controls, all factory assembled and tested.

1. Refrigerant: Charge units with refrigerant. Provide direct connect type piping connections to receive piping from evaporator coils.
2. Outdoor mounting: Provide weather tight housing and low ambient controls for units mounted outdoors.

B. Refrigerant Piping: Type ACR copper tubing, hard temper, with wrought fittings and silver solder joints. Insulate suction lines with 1/2-inch pre-molded foamed plastic insulation.

C. Electrical Wiring: Electrical Contractor to provide required wiring between electrical rough in and refrigeration units for proper operation.

D. Plumbing Piping: Provide required water and drain piping between plumbing rough in and refrigeration units for proper operation.

E. Refrigeration Specialties: Provide as indicated refrigerant dryer, liquid line solenoid valve, suction line filter, expansion valve and water regulating valve (for water cooled condensers only). Provide pump down control circuit consisting of thermostat and solenoid valve. Maintain box temperature from thermostat and liquid line solenoid valve; control compressor from suction pressure.

2.7 SUBSTITUTIONS

A - In cases where multiple manufacturers have been listed in the itemized specifications, the model number and description indicated are for the first named manufacturer. Equivalent products produced by the other listed manufacturers will be acceptable for use on the project.

All “like products” must be provided by one manufacturer. As an example, all reach-in and roll-in refrigerators and freezers must be manufactured by the same company. The food
service consultant shall have authority and final say regarding the equivalency of the proposed 2nd and 3rd listed manufacturer's products, and what items are to be considered “like products”.

B - Refer to Division 1 specification section “Substitution Process” for additional guidelines and requirements.

C - Payment for all additional design, engineering and construction costs incurred, as a result of any substituted item, will be the responsibility of the food service equipment contractor. No additional compensation will be provided to cover these costs from the food service consultant. Purchasing and use of pre-owned equipment will be considered a substitution. Review of this equipment and any changes to layout and design as a result of substituted equipment will be invoiced on an hourly basis as additional services established in the architect/food service consultant design agreement.

E - Substitutions for any systems that have been custom engineered will need to be reengineered by the proposed substituted manufacturer based on their guidelines and listings. The engineering drawings and specifications will need to be forwarded to the food service consultant for evaluation.

F - Substituted products must be accepted by the owner/client taking into consideration the evaluation of the substituted products by the food service consultant.

PART 3 – EXECUTION

3.1 INSPECTION

A. Rough In Work: Examine roughed in mechanical and electrical services, installation of floors, walls, columns and ceilings, and other conditions under which food service work is to be installed; verify dimensions of services and substrates before fabricating work. Notify contractor of unsatisfactory locations and dimensions of other work and of unsatisfactory conditions for proper installation of food service equipment. Do not proceed with fabrication and installation until unsatisfactory dimensions and conditions have been corrected in a manner satisfactory to installer.

3.2 INSTALLATION

A. Install all equipment, including existing reused items, per manufacturer’s recommendations.

B. Set each item of non-mobile and non-portable equipment securely in place, level and adjust to correct height. Anchor to supporting substrate where indicated and where required for sustained operation and use without shifting or dislocating. Conceal anchorages where possible. Adjust countertops and other work surfaces to level tolerance of 1/16-inch maximum offset, and maximum variation from level or indicated slope of 1/16 inch per foot.

1. Where indicated or required for safety of equipment operator, anchor equipment

to floor or wall. Where equipment is indicated to be anchored to floor, provide legs with adjustable flanged foot. Install 2 anchors on each foot.

C. Field Joints: Complete field assembly joints in work (joints cannot be completed in shop) by welding, bolting and gasketing, or similar methods as indicated. Grind welds smooth and restore finish. Set or trim gaskets flush, except for "T" gaskets as indicated.

D. Enclosed Spaces: Treat spaces that are inaccessible, after equipment installation, by covering horizontal surfaces with powdered borax at the rate of 4 ounces per square foot.

E. Closure Plates and Strips: Install where required with joints coordinated with units of equipment.

F. Cutouts: Provide cutouts in food service equipment where required to run plumbing, electric, gas or steam lines through equipment items for final connection.

G. Sealants and Gaskets: Install all around each unit to make joints airtight, water tight, vermin proof and sanitary for cleaning purposes. In general, make sealed joints not less than 1/8 inch wide, and stuff backer rod to shape sealant bead properly at 1/4-inch depth. Shape exposed surfaces of sealant slightly concave with edges flush with faces of materials at joint. At internal corner joints, apply sealant or gaskets to form a sanitary cove of not less than 3/8-inch radius. Provide sealant filled or gasketed joints up to 3/4-inch joint width; metal closure strips for wider joints, with sealant application each side of strips. Anchor gaskets mechanically or with adhesives to prevent displacement.

3.3 RELOCATION OF EXISTING FOOD SERVICE EQUIPMENT

A. It is the responsibility of the food service contractor to relocate all existing to be reused items. The food service contractor must mark all items requiring disconnection from utilities. Electrical, Plumbing, and HVAC contractors will disconnect food service equipment from the utilities. The food service contractor shall then remove equipment off-site that is to be reused and protect until time of installation. The food service contractor is to then relocate these reused items to their final position and make ready for connection by the various trades.

B. Refer to architectural drawings and specifications for scope associated with existing equipment within the kitchen space that is considered existing/remain or existing and to be disposed of.

C. A full site survey of all existing conditions and equipment must be scheduled and completed prior to submitting a final bid for the scope defined in this specification section

3.4 FIELD QUALITY CONTROL

A. Testing: Coordinate start up of food service equipment when service lines have been tested, balanced and adjusted for pressure, voltage and similar considerations. Do not operate steam lines until they have been cleaned and treated for sanitation. Before testing, lubricate each equipment item in accordance with manufacturers' recommendations.

1. Test each item of operational equipment to demonstrate that it is operating properly and that controls and safety devices are functioning. Repair or replace equipment found to be defective in its operation, including units that are below capacity or operating with excessive noise or vibration.

3.5 CLEANING

A. After completion of installation and other major work in food service areas, remove protective coverings, if any, and clean food service equipment, internally and externally. Restore exposed and semi-exposed finishes to remove abrasions and other damages; polish exposed metal surfaces and touch up painted surfaces. Replace work that cannot be successfully restored.

1. Prior to date of substantial completion on food service equipment work, buff exposed stainless steel finishes lightly, using power buffer and polishing rouge or grit of No. 400 or finer.

B. Final Cleaning: After testing and start up, but before time of substantial completion, clean and sanitize food service equipment and leave in condition ready for food service.

3.6 CLOSEOUT PROCEDURES

A. Provide services of installer's technical representative and manufacturers technical representative where required, to instruct Owner's personnel in operation and maintenance of food service equipment.

1. Schedule training with Owner; provide at least 7 day notice to contractor and architect of training date.

2. In addition to Division 00 and 01 requirements, include a minimum of thirty minutes per piece of equipment on site in one visit for this training, but not less than minimum required to sufficiently train Owner’s personnel.

3.7 FOOD SERVICE EQUIPMENT SCHEDULE

A. The following pages comprise the list of itemized food service equipment specifications for this project. Refer to the drawings for location of the items. In any case(s) where discrepancies exist in quantity between drawings and itemized specifications, the larger quantity should be used.

PART 4 - ITEMIZED SPECIFICATIONS

ITEM 1. TWO COMPARTMENT WALK-IN COOLER/FREEZER by TAFCO or AMERICAN PANEL

This two compartment walk-in cooler/freezer is to be the size and shape as shown on the foodservice equipment plan (FS100). Manufacturers' standard (actual) sizes and door locations are not acceptable unless they conform to the equipment plan. The height is to be 8'-6". It is to be constructed as one common unit. It is to be constructed in a 4" deep depressed building slab with the walk-in floor acting as the finished floor material. Depth of slab depression is from top of finished floor in the kitchen, food service equipment contractor to coordinate proper size and depth and accept size, depth, and levelness of the slab depression prior to installing the walk-in.

A - Constructed of modular panels
B - Construction to be in strict compliance with NSF standard number 7 and in accordance to section 312 of the US Energy Bill H.R.6
C - Panels are to consist of interior and exterior metal surfaces precision roll formed to exact dimensions with double 90° edges. The finished metal surfaces are to be fitted with a tear drop profile gasket and placed in precision tooled fixtures where they are to be injected with foamed-in place urethane insulation.
D - Curing of the insulating core is to take place at a controlled temperature to provide permanent adhesion to the metal surfaces, to allow uniform foam expansion and to maximize finished panel strength
E - Panel edges to have molded urethane tongue and groove profile to accurately align panels during installation and to provide an air tight seal
F - All light fixtures to be vapor proof LED fixtures with bulbs included
G - Panels to be 4" thick
H - Floor panels to have an NSF approved cove between the floor and walls
I- Floor panels are to be plywood reinforced constructed as "super floor" and are to be capable of supporting evenly distributed loads of 5,000 lbs. per square foot
J - Doors are to be flush mount, magnetic infitting type with door opening of 36" wide x 78" high.
K - Perimeter of the doors and frames shall be built of fiberglass reinforced plastic (FRP) and shall house a door frame heater circuit, flexible bellows type vinyl door gasket with magnetic core, a magnet attracting stainless steel trim strip and flexible vinyl door sweep
L - Door frames to be provided with a vapor proof light fixture centered above the door with globe pre-wired to a rocker type light switch with pilot light, digital thermometer, variable slide rheostat for heater wire control and a 14 gauge galvanized steel threshold plate
M - Door hardware to be die cast zinc with brushed satin finish
N - Doors to be mounted with three (3) heavy-duty cam lift hinges per door
O - Door pull handles to incorporate a keyed cylinder lock, provision for a separate padlock and Kason # 0485 1/4 turn inside safety release handle to prevent personnel entrapment
P - Doors to include a hydraulic closer device for positive door closing
Q - Each door equipped with Kason Thermal Flex two piece vinyl doors
R - Cooler doors to have insulation of at least R-32 and freezer doors to have insulation of at least R-32
S - Finishes are to be as follows:

1- Unexposed exterior walls to be .032" mill finished stucco embossed aluminum
2- Exposed exterior walls to be 22 gauge stucco embossed stainless steel
3- Interior walls to be .032" mill finished stucco embossed aluminum
4- Interior ceilings to be .032" mill finished stucco embossed aluminum, painted white
5- Interior floor to be 1/8" aluminum diamond tread plate floor surface – Grind off aluminum bumps at seams between floors panels so that adjoining floor panels can be pulled and sealed tight to each other
6- Exterior floor to be 26 gauge stucco embossed galvalume
7- Exterior ceiling to be 26 gauge stucco embossed galvalume
8- Exposed exterior ceiling to match exposed exterior wall finish
9- Interior/exterior doors and door frames to be have 36" high 1/8" diamond tread aluminum kick plate, installed flush with remaining finish - remainder of door and frame to be 18 gauge stainless steel and to include a 14" x 14" heated view window in each door
10- Each door to include Modularm model # 75LC digital thermometer and monitoring system installed by the walk-in manufacturer
11- Orient ceiling panels to span shortest distance across walk-in to eliminate or minimize the use of ceiling support rods attached to the structure above

T - Insulation to be 4" thick high pressure impingement mixed, foamed-in-place urethane, minimum 2.2 lb. per cubic foot density, fully heated cured and bonded to metal finishes

U - Minimum R-value for cooler walls, ceilings, and doors is to be R-32

V - Minimum R-value for freezer walls, ceilings, and doors is to be R-32

W - Minimum R-value for freezer floors is to be R-28

X - The insulation shall have a 97% closed cell structure

Y - Assembly of the walk-in is to be accomplished by the use of cam-locking mechanisms

Z - Cam lock spacing on vertical joints shall not exceed 46", or 23" from the junction of vertical and horizontal joints

AA - Cam locks to be foamed-in-place and anchored securely in the panel by steel wings integral to the lock housing

BB - Cam locks to be operated through access ports by the use of a hex wrench

CC - Access ports are to be on the walk-in interior and are to be covered by vinyl snap-in caps after final assembly

DD - Provide and install the following extra light fixtures:
1- Cooler section to include two (2) additional light fixtures
2- Freezer section to include three (3) additional light fixtures

EE - Heated vent port for the freezer

FF - Provide and install matching stainless steel closure panels between walk-in walls and building walls - Closure panels to be constructed of the same material as the exposed exterior walk-in walls

GG - Provide and install matching stainless steel closure panels from face of walk-in to a height of 1" above finished ceiling – Closure panels to be constructed of the same material as the exposed exterior walk-in walls

HH - Provide and install bumper rail on exposed walk-in surfaces - bumper rail to have black rubber bumper insert installed in extruded aluminum channel fastened at 10" and 34" above finished floor

II- All light fixtures to be furnished with LED bulbs, fixtures to be vapor proof globe style fixtures

JJ - Entire walk-in to be installed by a factory authorized installer, proof of authorization must be submitted on the manufacturer's letterhead and included with the shop drawing submittal – shop drawing submittal will not be reviewed without this information.

ITEM 2. REFRIGERATION RACK SYSTEM by COLDZONE or COOLTECH

This refrigeration system is to be a pre-engineered and factory assembled unit, trade name "Mini-Pak" air-cooled outdoor refrigeration system. This rack system is to be located outdoors on the building roof in the area above the walk-in cooler or location as directed by the architect. The estimated total line run is approximately 100' and designed to service Item 1 Walk-in Cooler/Freezer.

This unit is to be an air-cooled model # MPL-2 provided with the following features and accessories:

The system shall be housed in a single, compact rustproof cabinet. The unit shall utilize a single-circuited air-cooled condenser. The frame and base shall be comprised of 16 and 10-gauge all welded sheet steel, respectively. Hot-air discharge from the condenser fans shall be horizontal.

Fan blades shall be covered with a plastic coated fan guard. The unit shall be provided with compressor and air-cooled condenser operating within the recommended range of suction and discharge pressures.

Each condensing system shall be equipped with dual pressure controls, suction-line vibration eliminator, and oversized receiver -- all of which shall be factory assembled.

Each condensing unit shall be equipped with a properly sized receiver with pump-down capacity large enough to accept the total liquid volume of refrigerant for all systems without exceeding 80% of its volumetric capacity. Each receiver shall be equipped with "king and queen" valves with service ports.

All compressor units shall be new factory assembled to operate with the refrigerant as noted above.

ELECTRICAL CONTROL PANEL

The refrigeration system shall have a factory-mounted and pre-wired (NEMA 3 EQV.) electrical control panel complete with industrial grade interlocked main-fused disconnect with separate compressor and fan motor circuit breakers, contactors and defrost time clocks for single point power connection. A photo etched wiring diagram made up of a .012 aluminum plate shall be permanently affixed inside the control panel.

PRE-PIPING

All refrigerant lines shall be type "L" tubing and extended to one side of the package in a neat and orderly manner with ends of lines capped and identified by system using photo-etched tags. All tubing shall be securely supported and anchored with uni-strut clamps. Suction lines shall be wrapped and insulated to prevent condensate accumulation. All piping shall be pressure-tested at the factory with nitrogen at 150 psi for low side and 400 psi for high side.

EVAPORATOR COILS

The evaporator coils shall include a compressor BTU matched low-profile end mount coil, thermostat, thermal expansion valve and liquid-line solenoid valve shipped loose.

INCLUSIONS

This system shall include but not be limited to the following components:

A - 1.0 H.P. medium temperature refrigeration system for Item 1 walk-in cooler with model # ZS09KAE redundant compressor and model # CL6A094ADA evaporator coils operating at 35°
B - 4.0 H.P. low temperature refrigeration system for Item 1 walk-in freezer with model # ZF13K4E redundant compressor and model # CL6E105DDA evaporator coils operating at -10°
C - System to utilize R-448A refrigerant
D - Compressor sized to operate at 95° ambient temperature
E - System supplied with mounted liquid line filter drier and sight glass
F - System supplied with factory installed suction line kit including line filter and piping
G - Heated and insulated receiver for low ambient conditions to be factory installed
H - Main fused disconnect switch
I - Each compressor supplied with crankcase heater and head pressure control
J - Evaporator fan motors to be high efficiency EC motors
K - Low temperature system supplied with suction line accumulator
L - Coils supplied with EcoNet defrost control system

REFRIGERATION INSTALLATION

Obtain all permits required for this installation, mount evaporator coils, provide and install refrigerant piping, fittings, hangers, support, hook-up and start-up as per manufacturers preparation and start-up procedures.

All copper tubing shall be refrigerant grade type "L". Sil-fos 15 shall be used, not soft solder. Insulate refrigerant piping as required with armaflex insulation. After the system and unit cooler have been connected, the balance of the system shall be leak-tested with all valves open.

The complete system shall be evacuated with a vacuum pump. Each system shall be charged with the refrigerant as specified by the manufacturer. Test and adjust each condensing unit to make the system operational.

Provide type "L" copper drain lines for walk-in refrigerators and freezers, pitched 1/4" per foot of run. Drain to be "P" trapped outside of refrigerated space to avoid entrance of warm, moist air or vermin. Provide drain line heater wrapped around the drain line for each unit cooler inside the freezer compartment. This drain line heater is to be insulated with Armaflex.

Entire system to be installed by ColdZone factory authorized installer, proof of factory authorization to be provided along with the submittal shop drawing.

Refer to general specifications of this spec section for additional details and requirements related to the refrigeration system installation.

ITEM 3. COOLER SHELVING by METRO (Five Sections of Shelving Required)

This "Metroseal 3" shelving with "Super Erecta Shelf Design" is to have the following features and accessories:

A - 12-year limited warranty against rust formation
B - Self-sealing hydrated chromate base layer
C - Epoxy coating with microban
D - Provide with adjustable wedges and corner release system
E - Capacity of 800 pounds for shelves under 48" in length and 600 pounds for shelves over 48" in length
F - Shelves adjustable in 1" increments

Each shelving section is to include four (4) shelves, four (4) posts, two (2) swivel casters and two (2) swivel brake casters. This shelving is to consist of the following components:

A - Twenty (20) model # 2442NK3 shelves
B - Twenty (20) model # 63UPK3 posts
C - Ten (10) model # 5MP 5" non-marking polyurethane swivel casters
D - Ten (10) model # 5MPB 5" non-marking polyurethane swivel casters with brakes

ITEM 4. MOBILE PAN RACK by NEW AGE or CRESCOR (Five Required)

These mobile pan racks are to be model # 1335 and are to include the following features and accessories:

A - Capacity of eighteen (18) 18" x 26" sheet pans on 3” centers
B - Universal angle to hold 18” x 26” and 12” x 20” pans
C - Lifetime construction warranty
D - Constructed of aluminum
E - Four (4) 5" platform type casters
F - Corner bumpers

ITEM 5. FREEZER SHELVING by METRO (Six Sections of Shelving Required)

This "Metroseal 3" shelving with "Super Erecta Shelf Design" is to have the following features and accessories:

A - 12-year limited warranty against rust formation
B - Self-sealing hydrated chromate base layer
C - Epoxy coating with microban
D - Provide with adjustable wedges and corner release system
E - Capacity of 800 pounds for shelves under 48" in length and 600 pounds for shelves over 48" in length
F - Shelves adjustable in 1" increments

Each shelving section is to include four (4) shelves, four (4) posts, two (2) swivel casters and two (2) swivel brake casters. This shelving is to consist of the following components:

A - Eight (8) model # 2442NK3 shelves
B - Twelve (12) model # 2448NK3 shelves

C - Four (4) model # 2460NK3 shelves
D - Twenty-four (24) model # 63UPK3 posts
E - Twelve (12) model # 5MP 5" non-marking polyurethane swivel casters
F - Twelve (12) model # 5MPB 5" non-marking polyurethane swivel casters with brakes

ITEM 6. FREEZER DUNNAGE RACK by SPG

This dunnage rack is to be model # 4H2050 and is to be provided with the following features and accessories:

A - Constructed of heavy duty 6063 aluminum
B - Slotted tops
C - 2200 lb. load capacity
D - 1 ½" square aluminum tube welded horizontally on 4 ½" centers
E - 24" x 60" foot print

ITEM 7. DRY STORAGE SHELVING by METRO (Seven Sections of Shelving Required)

This "Metroseal 3" shelving with "Super Erecta Shelf Design" is to have the following features and accessories:

A - 12-year limited warranty against rust formation
B - Self-sealing hydrated chromate base layer
C - Epoxy coating with microban
D - Provide adjustable wedges and corner release system
E - Capacity of 800 pounds for shelves under 48" in length and 600 pounds for shelves over 48" in length
F - Shelves adjustable in 1" increments

Each shelving section is to include four (4) shelves, four (4) posts, two (2) swivel casters and two (2) swivel brake casters. This shelving is to consist of the following components:

A - Twenty (20) model # 2448NK3 shelves
B - Four (4) model # 2454NK3 shelves
C - Four (4) model # 2460NK3 shelves
D - Twenty-eight (28) model # 74UPK3 posts
E - Fourteen (14) model # 5MP 5" non-marking polyurethane swivel casters
F - Fourteen (14) model # 5MPB 5" non-marking polyurethane swivel casters with brakes

ITEM 8. MOBILE CAN RACK by CHANNEL

This can rack is to be model # CSR-156M and is to include the following features and accessories:

A - All welded construction
B - Fitted with polyurethane plate casters
C - Two swivel casters and two with brakes
D - Capacity of 156 #10 cans
E - First in first out design

ITEM 9. ADA HAND SINK with FAUCET by ADVANCE TABCO

This ADA Hand Sink is to be model # 7-PS-25 and is to be provided with the following features and accessories:

A - Deep drawn 16” x 14” x 5” sink bowl
B - Sink bowl to be 2” deep at the front sloping to 5” deep at the rear
C - Countertop die formed recessed edge with a 3/8” no-drip offset
D - Constructed of type 304 stainless steel
E - Model # K-310 drain strainer basket
F - 6” Extended deck mounted gooseneck faucet with wrist handles & deck mounted liquid soap dispenser
G - Stainless steel welded side splashes

ITEM 10. WORK TABLE WITH OVERSHELF AND TIER OF DRAWERS by CUSTOM FABRICATOR

This work table with overshelf and tier of drawers is to be constructed as per the detailed drawings, custom fabrication details and general specifications.

ITEM 11. CAN OPENER by EDLUND

This can opener is to be model # S-11 and is to be provided with the following features and accessories:

A - NSF certified
B - Quick change gear
C - Stainless steel slide bar and pull pin
D - Replaceable base insert for a tighter fit and easier slide action

ITEM 12. UTILITY CART by LAKESIDE, EAGLE or PIPER (Two Required)

These three tier carts are to be model # 422 and are to be provided with the following features and accessories:

A - Three stainless steel shelves welded to angle legs
B - Stainless steel caster frame
C - Standard 1˝-high upturn on ends and rear of top and center shelves
D - Four 4˝-diameter swivel plate casters
E - 1˝-diameter stainless steel handle at one end
F - Corner bumpers

ITEM 13. WORK TABLE WITH SINKS AND TIERS OF DRAWERS by CUSTOM FABRICATOR with FAUCET by T&S

This custom fabricated work table with sinks and tiers of drawers is to be constructed as per the detailed drawings, custom fabrication details and general specifications.

The T&S faucet is to be model # B-0221 and is to be provided with the following features and accessories:

A - Swivel base faucet
B - Deck mount mixing faucet on 8" centers
C - Lever handles

D - 12" swivel nozzle

ITEM 14. SHELVING by METRO (One Section Required)

This "Metroseal 3" shelving with "Super Erecta Shelf Design" is to have the following features and accessories:

A - 12-year limited warranty against rust formation
B - Self-sealing hydrated chromate base layer
C - Epoxy coating with microban
D - Provide with adjustable wedges and corner release system
E - Capacity of 800 pounds for shelves under 48" in length and 600 pounds for shelves over 48" in length
F - Shelves adjustable in 1" increments

Each shelving section is to include four (4) shelves, four (4) posts, two (2) swivel casters and two (2) swivel brake casters. This shelving is to consist of the following components:

A - Four (4) model # 2460NK3 shelves
B - Four (4) model # 74UPK3 posts
E - Two (2) model # 5MP 5" non-marking polyurethane swivel casters
F - Two (2) model # 5MPB 5" non-marking polyurethane swivel casters with brakes

ITEM 15. SPARE NUMBER

ITEM 16. SPARE NUMBER

ITEM 17. TYPE I HOOD by CADDY, Z-Vent, or HALTON

This Type I exhaust hood is to be a model # SHBC-C-W-186-ND-66 and is to be provided in one (1) section with size and shape as shown on the equipment plan (FS101) and details as noted on the mechanical connection plan and detail sheet (FS104). This hood is to be provided with the following features and accessories:

A - Dimensions: Approximately 15’-6” long x 5’-6" deep x 2'-0" high
B - Hood shall be of the high velocity, dry centrifugal extractor type
C - Centrifugal grease extraction to be accomplished within the grease extraction chamber by means of strategically placed baffles located within the path of the high velocity air passing through the chamber. All baffles shall extend the full length of the ventilator. Grease extraction efficiencies to be not less than 90%. All extractor cartridges shall be fully removable. No fixed in place baffles are acceptable.
Extractors to be easily removable from the floor by means of an extractor removal tool
D - Hood shall be equipped with a pitched trough with a removable grease collection located at one end
E - Hood shall operate as designed, utilizing exhaust air quantities as portrayed on the drawings
F - Hood shall be equipped with necessary hanger brackets at front and rear, for suspending from building overhead. Entire top perimeter at front and sides of

hood shall be fully enclosed with matching removable stainless steel closure panels (if necessary) to minimum height of 1" above the finished ceiling.

G - Hood shall be equipped with five (5) globe style light fixtures with LED bulbs. Fixtures shall be vapor and greaseproof globe style fixtures, UL Listed for use in commercial kitchen hood applications. Light fixtures shall be factory pre-wired to a single connection point and include LED bulbs.

H - Hood to be UL Listed under the category "Grease Extractors for Exhaust Ducts", UL 710, in compliance with all recommendations of the National Fire Protection Association's standards for kitchen cooking equipment ventilators, approved by the National Sanitation

I - Foundation, approved by BOCA and ICBO, and be in accordance with all local codes having jurisdiction

J - Hood to be constructed of all stainless steel, # 18 gauge type 304, #4 finish, all welded, grease and water tight. No material other than that described above shall be deemed acceptable

K - The top of the hood canopy shall be reinforced with a 16 ga s/s channel running the length of the hood

L - Hood shall be mounted at 6'-8" AFF to bottom of front face

M - Hood to include double wall construction at the rear to create a 3" air gap for 0" clearance to combustibles

N - Equipped with temperature sensors mounted in exhaust duct collars of hood

O - Hood mounted control panel to control hood lights, fans, and interlocking of the temperature sensors, exhaust and supply fans for the exhaust hood.

P - Control panel and temperature sensors to automatically activate hood fans when temperature in exhaust duct reaches 90°F

Q - Control panel to control the shutdown of the supply air fan during fire safety mode

R - Provide removable sliding balancing dampers for exhaust and supply duct collars.

S - Hood manufacturer to provide stamped engineer drawings if required by the authority having jurisdiction, service to include one stamped set with additional sets required at the cost of the contractor

T - Hood to be supplied with full length ceiling supply plenum, with 40% open stainless steel perforated panels and volume control damper for discharge of tempered make- up air

I- Control panel to include interlocks to remote wall mounted fan and light switches, switches furnished and installed by electrical contractor

ITEM 18. FIRE SUPPRESSION SYSTEM by ANSUL

This fire suppression system is to be model # R-102 for the Type I Hood (Item 17) and is to be as follows:

A - Total system to include the following:

1 - The fire suppression system shall be the pre-engineered, liquid agent, cartridge- operated type with a fixed nozzle agent distribution network -It shall be listed with Underwriters Laboratories, Inc. (UL)

2 - The system shall be capable of automatic detection and actuation or remote manual actuation

3 - The system shall have fire suppression capabilities for the following hazard areas: ventilating structures including hoods, ducts, plenums, and filters;

deep fat fryers; griddles and range tops; upright, natural charcoal, or chain-type broilers; electric, lava rock, mesquite or gas radiant char-broilers

4 - A systems owner's manual shall be provided containing basic information pertaining to system operation. A detailed technical manual shall provide system description, design, installation, recharge, and maintenance procedures, plus accessory installation and reset instructions.

B - The system shall be installed and serviced by authorized distributors that are trained and certified by the manufacturer

C - System equipment is to include the following:

1- The extinguishing agent shall be a potassium carbonate, potassium acetate-based formulation designed for flame knockdown and securement of grease related fires - It shall be available with instructions for liquid agent handling and usage

2- The agent tank(s) shall be installed in a stainless steel enclosure or wall bracket - The tank(s) shall be stainless steel

3- The tank(s) shall have a nominal capacity of either 1.5 gallon or 3 gallon with a working pressure of 100 psi, a test pressure of 300 psi, and a minimum burst pressure of 600 psi

4- The tank(s) shall include an adapter/tube assembly - The adapter shall be chrome-plated steel with a 1/4-18 NPT female inlet and a 1/2-14 NPT male outlet - The pick-up tube shall be carbon steel -1.2 in. O.D. by .028 wall - A vent plug shall be integral to the adapter

D - The regulated release mechanism shall be the spring-loaded, mechanical/pneumatic type capable of providing the expellant gas supply to one or two agent tanks, depending on the capacity of the nitrogen cartridge used. It shall contain a factory installed regulator deadset at 100 psi with an internal relief of approximately 145 psi

- In the "armed" position; the main spring force to the puncture pin piston shall be 150 pound

E - The mechanism shall have a visual indicator of the cocked or fired condition without having to open the enclosure

F - The regulated release mechanism shall have the following actuation capabilities: automatic actuation by a fusible link detection system; remote manual actuation by a mechanical pull station

G - The regulated release mechanism shall be compatible with mechanical gas line shut- off devices; or, when equipped with a field or factory-installed solenoid and switch, it shall be compatible with electric appliance shut-off devices

H - If more than two agent tanks are required, the regulated actuator(s) shall be available to provide expellant gas for additional tank(s) - It shall be connected to the cartridge receiver outlet of the regulated release mechanism providing simultaneous agent discharge - It shall contain a regulated actuator deadset at 100 psi with an internal relief of approximately 145 psi

I - The regulated actuator assembly shall contain a regulated actuator, regulator, expellant gas hose, and agent tank housed in a stainless steel enclosure with cover - The enclosure shall contain knockouts to permit installation of expellant gas line

J - The tank/bracket assembly shall contain a welded steel bracket and agent tank -

The bracket shall be provided to mount the agent tank in a minimum amount of space - The tank shall be secured with hinged brackets.

K - Each discharge nozzle shall be tested and listed with the system for specific applications - The nozzle tip shall be chrome-plated brass, and stamped with the part number and flow rating - The nozzle tip retainer and body shall be chrome plated brass - The nozzle strainer shall be brass with stainless 50 mesh screen

L - Each nozzle tip shall be covered by a stainless steel protective blow-off cap

M - The regulated release mechanism shall be compatible with a fusible link detection system

N - The fusible link shall be selected and installed according to the operating temperature in the ventilation system

O - A detector bracket/linkage assembly shall support the fusible link. The detector bracket shall be 16-gauge cold-rolled stainless steel

P - The detector linkage shall be aluminum.

Q - The detector bracket/linkage assembly shall have provisions for connecting 1/2" rigid or EMT thin-wall conduit, and 1/16" diameter flexible stainless steel rope. Changes in direction of the conduit and steel rope shall be accomplished with die cast aluminum alloy, 90 degree pulley elbows

R - All exposed conduits are to be chrome plated

S - If the release mechanism is not accessible for manual actuation, a remote manual pull station(s) shall be provided as the primary means of manual actuation

T - The pull station(s) shall be the recessed type, with conduit run within the walls

U - The pull station(s) shall be the break-rod type, and shall be connected to the release mechanism trip lever by means of a 1/16" diameter stainless steel rope and 1/2" conduit (chrome plated conduit where exposed)

V - The pull station(s) shall be located at a distance not more than 125 feet from the release mechanism

W - The mounting height and location of the pull station shall be in accordance with the authority having jurisdiction

X - A UL listed, electric snap-action switch shall be provided to shut off electrical power to appliances or to activate electrically operated devices. The switch shall allow for connection to the building alarm system - A relay must be supplied if the equipment load exceeds the rated capacity of the switch

Y - This system shall conform to all local, state and national codes having jurisdiction in this location

Z - The installer shall provide one-year service and inspection free of additional charge AA - Provide stamped engineer drawings if required by the authority having jurisdiction,

service to include one stamped set with additional sets required at the cost of the contractor

BB - Pull stations for the fire suppression system are required to have color and numerical coded signs that correspond with the hood they service. Sign shall be engraved type with foam adhesive backing. Minimum size shall be no less than 2” x 5”.

Corresponding signs shall be placed at pull stations and on the hoods they service. Signs shall comply with any requirements set forth by the local and state authorities having jurisdiction.

CC - Provide swivel union joints and Ansul flexible distribution hoses with restraining devices for nozzles servicing Item 24.

ITEM 19. STAINLESS STEEL WALL PANELS by CUSTOM FABRICATOR

These stainless steel wall panels are to be constructed as per the detailed drawings, custom fabrication details and general specifications.

ITEM 20. TWO BURNER RANGE by GARLAND or VULCAN with GAS QUICK DISCONNECT by DORMONT and EQUIPMENT POSITIONING DEVICE by DORMONT

This two-burner range is to be model # C18-7S and is to be provided with the following features and accessories:

A - Stainless steel front, sides, front rail and burner box
B - Mounted on 6” stainless steel adjustable legs
C - Two (2) 40,000 BTU open burners
D - Removable ring grate bowl over each burner
F - Cast iron top grates
G - One piece Stainless Steel drip tray
H - 3/4” Rear gas connection with pressure regulator I - Cap and cover both ends of front manifold
J - Mounted on a set of 5” diameter polyurethane non-marking swivel casters with front casters having brakes
K - Stainless steel door for cabinet base

The Dormont Manufacturing Company gas quick disconnect kit is to be a model # 1675KIT2S Supr-Safe Gas Connector Kit with Supr-Swivel. Length to be 48"

The Dormont Manufacturing Company Equipment Positioning Device is to be a model # PS

ITEM 21. DOUBLE DECK CONVECTION OVEN by GARLAND, SOUTHBEND, or US RANGE with GAS QUICK DISCONNECT by DORMONT

This Garland double deck convection oven is to be model # MCO-GS-20-M and is to be provided with the following features and accessories:

A - 60,000 BTU per cavity
B - Each compartment to have .6 HP fan motor with two speed fan control
C - Each compartment to have porcelain enamel oven interior with coved corners
D - Each compartment to have six (6) chrome plated oven racks on 13-position rack guides
E - Stainless steel front, top and sides
F - Each compartment to have 60/40 dependent door design with double pane thermal window in both doors
G - Interior oven cavity lighting
H - 6 ft. cord and plug for each compartment deck I - Factory interipiped to single 1” gas connection
J - Mounted on low profile casters, front casters with brakes

These Dormont Manufacturing Company gas quick disconnect kits are to be model # 16100KIT2S48 Supr-Safe Gas Connector Kit with Supr-Swivel. Length to be 48".

ITEM 22. DOUBLE DECK CONVECTION STEAMER by CLEVELAND with WATER FILTER by EVERPURE, GAS QUICK DISCONNECT by DORMONT, WATER QUICK DISCONNECT by DORMONT and DRAIN WATER TEMPERING DEVICE by COOL DRAIN FLOW, INC.

This Cleveland double deck convection steamer is to be model # 24-CGA-10 and is to be provided with the following features and accessories:

A - Cooking capacity of ten (10) 12” x 20”x 2-1/2” pans, five (5) per compartment
B - Gas fired steam generator, 125,000 BTU
C - Easy access cleaning port
D - Instant steam stand-by mode
E - 14 gauge, type 304 stainless steel construction for compartment door, cavity and steam generator
F - Audible signal for cooking time completion
G - Main power on/off switch with automatic water fill and ignition of gas burners via fully automatic electronic spark ignition
H - Steam cooking distribution system
I - Automatic generator drain with drain cleaning cyclel
J - Automatic probe for water level control
K - “Cool to the Touch” two-piece compartment door. Free floating inner door with reversible gasket for air tight seal
L - Stainless steel slam/latch door latch
mechanism M - Condensate drip trough
N - Door hinged left, controls on right
O - 6” stainless steel legs
P - Steam cut-off switch
Q - Electronic timer with load compensating feature

This Everpure water filter is to be model # EV9797-22 Kleensteam II Twin System

This Dormont Manufacturing Company gas quick disconnect kit is to be model # 1675KIT2S48 Supr-Safe Gas Connector Kit with Supr-Swivel. Length to be 48".

The Dormont water quick disconnect is to be model # W50BP2Q-48. Length to be 48”.

This Cool Drain Flow drain tempering device is to be a model # DTV-15 for use with convection steamers

ITEM 23. MOBILE WORK TABLE by CUSTOM FABRICATOR

This mobile work table is to be constructed as per the detailed drawings, custom fabrication details and general specifications.

ITEM 24. DOUBLE DECK CONVEYOR OVEN by LINCOLN with GAS QUICK DISCONNECT (Two Required) and EQUIPMENT POSITIONING DEVICE by DORMONT

This double deck conveyor oven is consist of two model # 1116-000-U ovens and is to be provided with the following features and accessories:

A - 28” Long Cooking Chamber
B - 250°F to 575°F
C - Self-Contained conveyorized cooking chamber
D - Provided with all hardware and accessories for double stack configuration
E - Mounted on manufacturer’s matching mobile stand for double stacked units
F - #4 Finish stainless steel exterior
G - FastBake option for reduced cook times
H - Digital controls with single on/off switch
I - Microprocessor controlled bake time and conveyor speed
J - Display indicating temperature, belt speed, thermostat, and diagnostic temperatures
K - Front load conveyor
L - removable door
M - 18” wide conveyor
N - Removable and reversible conveyor
O - Designed to cook food using air impigment
P - Four separate and removable air distribution fingers
Q - One (1) year parts/labor warranty
R - Factory programmed to operate from right to left and be field convertible with product stops at both ends of the conveyor
S - Ovens mounted to manufacturer’s matching mobile stand for double stacked units
T - Provided with all hardware and accessories for double stack installation

These Dormont Manufacturing Company gas quick disconnect kits are to be a model # 1675KIT2S48 Supr Safe Gas Connector Kit with Supr-Swivel. Length to be 48".

This Dormont equipment positioning device is to be model # PS

ITEM 25. WORK TABLE WITH SINK by CUSTOM FABRICATOR AND FAUCET by T & S

This custom fabricated work table with sink and tier of drawers is to be constructed as per the detailed drawings, custom fabrication details and general specifications.

The T&S faucet is to be model # B-0221 and is to be provided with the following features and accessories:

A - Swivel base faucet
B - Deck mount mixing faucet on 8" centers
C - Lever handles
D - 12" swivel nozzle
E - B-0199-01F-10 aerator

ITEM 26. ONE SECTION PASS-THRU HEATED CABINET by CONTINENTAL

This one-section pass-thru heated cabinet is to be model # DL1WE-SA-PT and is to be provided with full size doors. The doors are to be hinged as indicated on drawing FS101. This pass-thru heated cabinet is to have the following features and accessories:

A - Stainless steel exterior with aluminum interior
B - Digital exterior thermometer control system with hi/lo alarms
C - Self-contained heating system
D - Equipped with a 1,500 watt heating system

E - 22 cubic foot net capacity
F - Temperature range adjustment from 90 to 180 degrees F
G - Top mounted heating plenum with side mounted duct system
H - Cabinet fully insulated with 3” of non-CFC foam
insulation I - Polished chrome door handles
J - Self-closing doors with magnetic snap in gaskets
K - Each door equipped with cylinder locks
L - Pass-through design
M - Automatic interior lighting
N - Stainless steel strip heaters located in base of each compartment
O - Mounted on 5” casters, two swivel with brakes
P - Interior compartments fully equipped with universal pan slides mounted on 3” centers

ITEM 27. TWO SECTION PASS-THRU REFRIGERATOR by CONTINENTAL

This two section pass-thru refrigerator is to be model # 2RN-SA-PT and is to be provided with full size doors. The doors are to be hinged as shown on drawing FS101. This pass-thru refrigerator is to have the following features and accessories:

A - Stainless steel exterior with aluminum interior
B - Digital exterior thermometer control system with hi/lo alarms
C - Self-contained top mounted refrigeration system
D - Refrigeration system to utilize non ozone depleting refrigerant
E - 50 cubic foot net capacity
F - Automatic electric condensate evaporator
G - Expansion valve style refrigeration system
H - Cabinet fully insulated with 3” of non-CFC foam
insulation I - Polished chrome door handles
J - Self-closing doors with magnetic snap in gaskets
K - Each door equipped with cylinder locks
L - Reach-in design
M - Automatic interior LED lighting
N - Cam action, lift off hinges
O - Top and side mounted air distribution ducts
P - Mounted on 5” casters, two swivel with brakes
Q - Interior compartments fully equipped with six (6) adjustable shelves per compartment
R - Three year parts, labor, and five year compressor warranty

ITEM 28. HAND SINK by ADVANCE TABCO (Two Required)

These hand sinks with faucets are to be model # 7-PS-96 and are to be provided with the following features and accessories:

A - Deep drawn 10” x 14” x 5” sink bowl
B - Countertop die formed recessed edge with a 3/8” no-drip offset
C - Constructed of type 304 stainless steel
D - Model # K-310 drain strainer basket
E - Two (2) stainless steel welded side splashes

F - Built to allow for flush-to-wall mount application
G - Removable access panel
H - Galvanized wall mounting bracket
I - Splash mounted gooseneck faucet furnished with aerator J - Foot pedal valve for water operation

ITEM 29. CONDIMENT COUNTER by PIPER

This condiment counter is to be a customized 3-ST-MOD series unit and is to have the following features and accessories:

A - 14 gauge stainless steel with 1-1/2" turndown
B - 18 gauge stainless steel undershelf
C - 20 gauge stainless steel base cabinet enclosed on all sides with front side containing locking stainless steel doors with adjustable intermediate shelf and fixed bottom shelf
D - Custom plastic laminate finish applied to front , doors, rear, and both ends, to match existing laminate finish on Item 32 or as otherwise directed by architect, verify with architect prior to ordering
E - Top height modified to be 32"-aff with a length of 48" and depth of 30"
F - Entire unit mounted on casters, two swivel caster and to rigid casters, all casters with brakes
G - Piper Project # 40193 to be references as a baseline and to be modified to match these specifications

ITEM 30. MILK COOLER – EXISTING/RELOCATED

ITEM 31. TRAY DISPENSER by CADDY or STERILSIL

This tray dispenser is to be model # CM-1418-CS and is to be provided with the following features and accessories:

A - Self-leveling mechanism to be cantilevered suspension type
B - Removable load platform to be constructed of 18 gauge stainless steel and secured to a 16 gauge stainless steel angle support frame and a pair of cantilevered rust resistant 1/4" steel suspension arms
C - Suspension arms to be securely guided by ball bearing rollers
D - Lower rack storage platform to be formed of 16 gauge stainless steel, channeled on all four sides with two stainless steel reinforced members underneath
E - Equipped with four (4) swivel casters with 4" polyurethane casters
F - Verify tray size with owner prior to finalizing order

ITEM 32. HOT FOOD COUNTER WITH SNEEZE GUARD, HEAT LAMP AND LIGHTS – EXISTING/RELOCATED and DRAIN TEMPERING DEVICE by COOL DRAIN FLOW, INC with NEW TRAYSLIDE by PIPER

This Cool Drain Flow drain tempering device is to be a model # DTV-MINI for use with hot food wells.

Provide unit with Piper solid stainless steel solid ribbed trayslide on hinged brackets set at 32"-AFF and compatible with existing Piper Model # 5HF.

ITEM 33. PASS-THRU COUNTER by PIPER

This pass-thru counter is to be a customized 2-ST-MOD series unit and is to have the following features and accessories:

A - 14 gauge stainless steel with 1-1/2” turndown
B - 18 gauge stainless steel undershelf
C - 20 gauge stainless steel base cabinet enclosed on all sides with worker side open to adjustable intermediate shelf and fixed bottom shelf
D - Custom plastic laminate finish applied to all sides to match existing laminate finish on Item 32 or as otherwise directed by architect, verify with architect prior to ordering
E - Top height modified to be 32”-aff depth of 28” to match adjacent equipment and width of 24”
F - Solid stainless steel ribbed trayslide on hinged brackets mounted at 32”-AFF
G - Entire unit mounted on casters, two swivel casters and to rigid casters, all casters with brakes
H - Interlocking mechanisms to secure unit to adjacent items
I - Provide 120-Volt convenience outlet mounted in base of counter factory pre-wired to a 6’ long cord and plug assembly
J - Bottom shelf to include hole with grommet for access to electrical service below
K - Provide unit with fold down stainless steel plate shelf on worker side, to match shelf design of existing adjacent Item 32
G - Piper Project # 40193 to be references as a baseline and to be modified to match these specifications

ITEM 34. COLD FOOD COUNTER WITH SNEEZE GUARD WITH LIGHTS by PIPER

This cold food counter with sneeze guard and lights is to be a customized 5-CB-MOD series unit and is to have the following features and accessories:

A - 14 gauge stainless steel with 1-1/2” turndown
B - 18 gauge stainless steel undershelf
C - 20 gauge stainless steel base cabinet enclosed on all sides with worker side open to adjustable intermediate shelf and fixed bottom shelf
D - Custom plastic laminate finish applied to all sides to match existing laminate finish on Item 32 or as otherwise directed by architect, verify with architect prior to ordering
E - Top height modified to be 32”-aff depth of 28” to match adjacent equipment
F - Solid stainless steel solid ribbed trayslide on hinged brackets mounted at 32”-AFF
G - Entire unit mounted on casters, two swivel casters and to rigid casters, all casters with brakes
H - Interlocking mechanisms to secure unit to adjacent items
I - Self-contained refrigeration system
J - Cold well unit with capacity of five (5) 12”x20” food pans
K - 1” drain with valve to exit left end of unit from the worker’s side
L - Worker side to include fixed bottom shelf with hole and grommet to exit bottom right end for electrical service below

M - Provide unit with stainless steel square tube self-serve sneeze guard with adjustable front glass, end glass, top glass, LED lights, and to match design of existing guard on Item 32

N - Entire unit including cold pan refrigeration system and sneeze guard light to be factory pre-wired to a 6' long single cord and plug assembly

O - Provide unit with fold down stainless steel plate shelf on worker side, to match shelf design of existing adjacent Item 32

P - Piper Project # 40193 to be references as a baseline and to be modified to match these specifications

ITEM 35. ICE CREAM CABINET by OWNER (Not In Contract)

ITEM 36. CASHIER COUNTER by PIPER

This cashier counter is to be a customized 2-CD-MOD series unit and is to have the following features and accessories:

A - 14 gauge stainless steel with 1-1/2" turndown

B - 18 gauge stainless steel undershelf

C - 20 gauge stainless steel base cabinet enclosed on all sides with worker side open to foot rest and lockable cash drawer with front of unit to include lockable stainless steel doors with fixe bottom shelf and adjustable intermediate shelf

D - Custom plastic laminate finish applied to all sides and doors and to match existing laminate finish on Item 32 or as otherwise directed by architect, verify with architect prior to ordering

E - Top height modified to be 34"-aff with an overall top size of 30" deep and 48" long

F - Solid stainless steel ribbed trayslide on hinged brackets mounted at 32"-AFF

G - Entire unit mounted on casters, two swivel casters and to rigid casters, all casters with brakes

H - Piper Project # 40193 to be references as a baseline and to be modified to match these specifications

ITEM 37. PRETZEL CABINET – EXISTING/RELOCATED

ITEM 38. POINT OF SALE STATION by OWNER'S VENDOR (Not In Contract)

ITEM 39. SPARE NUMBER

ITEM 40. SPARE NUMBER

ITEM 41. SPARE NUMBER

ITEM 42. SOILED DISHTABLE WITH PRE-RINSE SINK by CUSTOM FABRICATOR

This Custom Fabricated soiled dishtable with pre-rinse sink is to be constructed as per the detailed drawings, custom fabrication details and general specifications.

ITEM 43. 3-HP DISPOSER WITH CONTROLS, SOLENOID VALVE, and VACCUM BREAKER – EXISTING/RELOCATED

ITEM 44. PRE-RINSE SPRAY ASSEMBLY – EXISTING/RELOCATED

ITEM 45. DISHMACHINE – EXISTING/RELOCATED

ITEM 46. SPARE NUMBER

ITEM 47. CLEAN DISHTABLE by CUSTOM FABRICATOR

This clean disthable is to be constructed as per the detailed drawings, custom fabrication details and general specifications.

ITEM 48. OVERSHELF by CUSTOM FABRICATOR

This overshelf is to be constructed as per the detailed drawings, custom fabrication details and general specifications.

ITEM 49. THREE BOWL POT AND PAN SINK – EXISTING/RELOCATED and FAUCETS by T & S (Two Required)

This 3-Bowl pot & pan sink is to be existing/relocated.

These T & S faucets are to be model # B-0231 and are to be provided with the following features and accessories:

A - Splash mounted mixing faucet on 8" centers
B - Swivel base faucet
C - Lever handles
D - 12" swivel nozzle
E - Two (2) supply nipples # B-0425
F - Two (2) short elbows # 006895-20

ITEM 50. OVERSHELF WITH POT HOOKS by CUSTOM FABRICATOR

This overshelf with pot hooks is to be constructed as per the detailed drawings, custom fabrication details, and general specifications.

ITEM 51. CLEAN POT & PAN SHELVING by METRO (Four Sections of Shelving Required)

This "Metroseal 3" shelving with "Super Erecta Shelf Design" is to have the following features and accessories:

A - 12-year limited warranty against rust formation
B - Self-sealing hydrated chromate base layer
C - Epoxy coating with microban
D - Provide with adjustable wedges and corner release system
E - Capacity of 800 pounds for shelves under 48" in length and 600 pounds for shelves over 48" in length
F - Shelves adjustable in 1" increments

Each shelving section is to include four (4) shelves, four (4) posts, two (2) swivel casters and two (2) swivel brake casters. This shelving is to consist of the following components:

A - Sixteen (16) model # 2454NK3 shelves

D - Sixteen (16) model # 74UPK3 posts
E - Eight (8) model # 5MP 5" non-marking polyurethane swivel casters
F - Eight (8) model # 5MPB 5" non-marking polyurethane swivel casters with brakes

ITEM 52. CHEMICAL SHELVING by METRO

This "Metroseal 3" shelving with "Super Erecta Shelf Design" is to have the following features and accessories:

A - 12-year limited warranty against rust formation
B - Self-sealing hydrated chromate base layer
C - Epoxy coating with microban
D - Provide with adjustable wedges and corner release system
E - Capacity of 800 pounds for shelves under 48" in length and 600 pounds for shelves over 48" in length
F - Shelves adjustable in 1" increments

Each shelving section is to include four (4) shelves, four (4) posts, two (2) swivel casters and two (2) swivel brake casters. This shelving is to consist of the following components:

A - Four (4) model # 2448NK3 shelves
D - Four (4) model # 74UPK3 posts
E - Two (2) model # 5MP 5" non-marking polyurethane swivel casters
F - Two (2) model # 5MPB 5" non-marking polyurethane swivel casters with brakes

ITEM 53. MOP SINK with FAUCET by ADVANCE TABCO

This mop sink is to be a model # 9-OP-40DF and is to be provided with the following features and accessories:

A - Type 300 stainless steel constructed
B - Seamless deep drawn sink bowl
C - "V" edge on three sides
D - Tile edge on rear
E - Model # K-240 faucet
F - Two (2) short elbows # 006895-20

ITEM 54. EYE WASH STATION by T&S

This eye wash station is to be model # EW-7360B and is to be provided with the following features and accessories:

A - 1/2" inlet for hot and cold water
B - 4-1/2 " centers
C - 3/4” tempered water outlet
D - Tempering valve
E - Stainless steel basin with drain
F - Push lever operated
G - Furnish with model # EW-9201EF thermostatic mixing valve

END OF SECTION 114000

SECTION 116100 - THEATER AND STAGE EQUIPMENT

PART 1 - GENERAL

1.1 RELATED DOCUMENTS

A. Drawings and general provisions of the Contract, including General and Supplementary Conditions and Division 1 Specifications Sections, apply to this Section.

1.2 DEFINITIONS

A. The theatrical equipment subcontractor, as identified throughout this Section, shall be a subcontractor to the General Contractor.

1.3 SUMMARY

A. This Section includes the fabrication and furnish/installation of the complete theatrical systems, including:

1. Rigging and battens
2. Curtain tracks
3. Front curtain ensemble
4. Cyclorama setting

B. All material, equipment, and services shall be provided as specified herein and as indicated on Drawings.

C. Fabrication, delivery, and installation in accordance with these specifications and pertinent drawings; and inspection and adjustment of the completed installation.

D. The theatrical equipment subcontractor for the Work shall visit the site and check and verify all dimensions to coordinate the equipment with the structure and any other trades.

E. The theatrical equipment subcontractor shall furnish any auxiliary steel and incidental items to result in an installation complete in all details whether or not such incidental items are specifically enumerated herein.

F. It is the responsibility of the theatrical equipment subcontractor to design the layout of the stage equipment so as to best utilize the specified equipment.

G. The theatrical equipment subcontractor shall instruct the Owner in the proper operation of all specified theatre and stage equipment.----

H. The theatrical equipment subcontractor and Electrical Contractor (EC) shall closely coordinate their Work.

1.4 RELATED WORK NOT INCLUDED IN THIS SECTION

A. Structural Steel

B. Miscellaneous steel, bracing, supports, etc. shall be coordinated so as not to conflict with theatrical design.

C. Sprinkler system: Locations of pipes and system components shall be arranged to avoid conflict with stage equipment.

D. Rainwater conductors shall be arranged to avoid conflict with stage equipment.

E. HVAC System: Locations of ducts and system components shall be arranged to avoid conflict with stage equipment.

F. Electrical system: Locations of conduits and system components shall be arranged to avoid conflict with stage equipment.

G. Carpentry: Locations and sizes of proscenium opening trim to be coordinated as not to interfere with the operation of fire curtain and/or installation of smoke pockets.

H. Electrical service.

I. House Lights.

J. Through-Penetration Firestop Systems.

K. Painting.

1.5 SUBMITTALS

A. Submit under provisions of General Conditions.

B. Shop Drawings: Indicate construction and fabrication details of all equipment and curtains, end track and batten locations, width of platform opening, location of blocking for anchors, appurtenances and interferences, and support bracket details.

C. Product Data: Provide profiles, shapes, acceptable load data, finishes available, drapery fabric, and colors.

D. Manufacturer’s Installation Instructions: Indicate special anchor requirements.

1.6 QUALITY ASSURANCE

A. Equipment specified herein shall be that of a single manufacturer and installer having a minimum of ten (10) years documented experience.

B. The theatrical equipment subcontractor must maintain and operate his own shop(s) and fabricate and assemble all components with the exception of standard hardware materials and equipment.

C. All work done under this Contract shall conform to applicable local, state and national codes, and be performed within labor regulations.

D. The theatrical equipment subcontractor shall be licensed and registered to perform work in Pennsylvania. Firms with out-of-state headquarters or corporations not incorporated in Pennsylvania must submit a copy of their registration to do business in the commonwealth as provided by the Department of the State.

E. Manufacturer/Theatrical Equipment Subcontractor shall employ a Quality Program through all of their manufacturing, installation, and management systems.

F. Where specific requirements for rigging components are more stringent and require precautions, procedures or refinements exceeding building codes or standards, such specific requirements shall supersede these codes and standards.

G. Products and installation shall meet ANSI standards as it pertains to rigging or specification standards, whichever is more stringent. Where specific requirements for rigging components are more stringent and require precautions, procedures or refinements exceeding building codes or standards, such specific requirements shall supersede these codes and standards.

1.7 PRODUCT SAFETY AND GUARANTEE

A. The safety parameters set forth in this Section are intended to reflect safeguards and precautions related to normal use of the equipment under ideal operating and loading conditions, and to anticipate equipment misuse, human error, and misjudgment.

B. The Work shall be fully guaranteed, with exception of normal wear, for a period of one (1) year after final acceptance. Any items showing evidence of defective materials or workmanship including installation workmanship shall be corrected or replaced within thirty (30) days after notification, and without cost to Owner.

1.8 SYSTEMS DEMONSTRATION

A. The theatrical equipment subcontractor shall instruct representatives of Owner in the proper operation of all equipment furnished as part of this Contract. On-site training session shall be up to four-hours in duration and shall be performed in a single day.

PART 2 – PRODUCTS

2.1 MANUFACTURERS

A. As a Basis-of-Design, the theatrical equipment subcontractor shall provide products as specified. The specified part numbers are included herein to provide bidders with information and

clarification on the minimum standard of quality for the products provided. Bidders must meet or exceed these specified standards. Products by other manufacturers meeting or exceeding these standards are acceptable alternatives, however for all deviations, the Contractor shall be responsible to coordinate, furnish and install all materials and make all required modifications to the building to accept the alternative products.

B. In accordance with Section "Substitutions", and during the substitution period provided by the Contract Documents, the Contractor shall provide the following:

1. Submit complete drawings, samples of load bearing components, and equipment data for this entire scope of work.
2. Provide strength test data indicating recommended working load of equipment from an independent testing laboratory in order for the manufacturer to be considered for substitution.
3. Provide a letter of review and opinion of equipment equivalence by a registered Professional Engineer licensed in Pennsylvania.
4. The Architect and/or their Theatrical Equipment Consultant will review the submission and shall make final determination of acceptability of that manufacturer/contractor.

2.2 STAGE DRAPERY FABRICATION

A. No smaller than half widths shall be used in construction of curtains.

B. There shall be no horizontal seams unless indicated.

C. Thread shall be glazed, left twist, #24.

D. Stage curtains shall have knife pleats and shall be at 12" centers with heavy 3" polypropylene webbing at heading. Knife pleats shall be directional and point off-stage.

E. All vertical seams shall be hidden within the fold of the pleats.

F. Salvages shall be scissor-clipped on 24" centers to relieve puckering at vertical seams.

G. There shall be no horizontal seams unless indicated.

H. Headings shall be finished with grommets and S-hooks; grommets and black 5/8" polyester braid tie lines; or plain as required. Grommets shall pass through three full layers of face fabric.

I. Grommets shall be black. No smaller than #3 toothed grommet shall be used. Plain washer grommets are not acceptable.

J. Front curtain ensemble shall contain no less than 50 percent sewn-in fullness. "Round pleats" formed by hanging two grommets from one "S" hook is not acceptable.

K. Valance and/or teaser shall have 3" side hems and 4" bottom hems.

L. Front curtain shall have one-half width turn-back at on and off-stage edges in addition to specified fullness.

M. On-stage and off-stage leading edges of front curtain shall contain 12” x 3” heavy polypropylene webbing reinforcement from the heading to 12” beneath the heading, concealed within the side hem/turn-back of the curtain.

N. Front curtain shall have 6” bottom hems.

O. Cyclorama setting shall contain no less than 50 percent sewn-in fullness. “Round pleats” formed by hanging two grommets from one “S” hook is not acceptable.

P. All Traveler curtains shall have one-half width turn-back at on and off-stage edges in addition to specified fullness.

Q. On-stage and off-stage leading edges of all traveler curtains shall contain 12” x 3” heavy polypropylene webbing reinforcement from the heading to 12” beneath the heading, concealed within the side hem/turn-back of the curtain.

R. Traveler curtains shall have 4” bottom hems with a #8 jack chain encased in a separate pocket suspended 2” from the bottom of the curtain. The use of galvanized lead weights is not acceptable.

S. Side leg curtains shall have 3” side hems and 4” bottom hems with a #8 jack chain encased in a separate pocket suspended 2” from the bottom of the curtain. The use of galvanized lead weights is not acceptable.

T. Lining shall contain same fullness as face fabric.

U. Lining shall have 2” side hems and bottom hems.

V. Lining shall be attached to side hems of face fabric with floating 5/8” braided polyester tabs on 18” centers. Lining shall be attached to bottom hems of face fabric with adjustable tabs on 36” centers.

W. Drops, scrims, and other flat-sewn curtain items shall have 2” side hems and 4” bottom hems. Bottom hem to contain separate concealed pipe pocket 2” from bottom of bottom hem complete with requisite tensioning pipe, PSI #PB-3/4.

X. A separate 3” x 54” flameproof strip shall be sewn to the off-stage bottom hem of each type of curtain fabricated from a cotton fabric for the purpose of removing samples for testing. IFR fabrics shall not have a flame proof strip.

Y. Curtains shall have tags sewn to off stage side hems at eye level. Tag information shall include requisite flame resistance information, date of manufacture, fabric identification, and curtain type.

Z. As manufactured by Pittsburgh Stage, Inc.

2.3 FABRICS

A. 24-ounce 100% polyester Charisma velour. Color as selected by Architect/Owner.

B. 11-ounce 100% polyester lining. Black in color.

C. 16-ounce 100% polyester masking cloth. Black in color.

D. Heavy Weight Seamless Muslin. Sky blue in color.

E. Heavy Weight Seamless Muslin. Natural color.

F. Seamless Sharkstooth Scrim. Color as selected by architect/owner.

G. Seamless Leno Filled Scrim. Color as selected by architect/owner.

H. All fabrics of their various kinds and colors shall each be from one and the same dye lot. When materials of one color exceed limit of one dye lot, the balance must be identically matched with the original lot. No "run of the mill" usage of colors will be acceptable.

I. All combustible fabrics shall be chemically flameproofed by immersion for compliance with all applicable codes. Spray method of flameproofing is unacceptable. This contractor shall furnish flameproofing certificates, giving name of flameproofing chemical used, identification of flameproofer, method of flameproofing used, and date.

J. All polyester fabrics shall be designated as inherently flame retardant by the manufacturer.

2.4 FINISHED DIMENSIONS

A. See drawings for finished sizes. It shall be the responsibility of the theatrical equipment subcontractor to properly mask the stage for optimum functionality. See Paragraph 2.3 FABRICS for Material requirements.

ITEM	MATERIAL
Valance	A
Front Curtain	A
Borders	C
Cyclorama	C

2.5 CURTAIN TRACKS

A. An 8:1 safety factor shall be used in the suspension of all overhead rigging. All attachments shall be submitted for approval of the Owner/Architect/Engineer.

B. Traveler Tracks: Silent Steel Model #280 CWANA with nylon wheeled ball bearing carriers, as manufactured by Automatic Devices Company. RWL to be not less than 25 pounds per linear foot. Lengths to suit traveler curtains. Curtain tracks (Model 2800) shall be of 14-gauge galvanized steel construction, entirely enclosed except for slot in bottom, each half to be in one continuous piece except where splicing clamps are required. Each curtain carrier (Model 2801) shall be spaced 12-inch centers and shall be of steel construction with two nylon-tired ball bearing wheels held to steel body by rustproof nickel-plated rivet, such wheels rolling on two separate parallel treads.

Each curtain carrier shall consist of a free-moving plated swivel and sufficient trim chain to accommodate curtain snap hook. Live-end pulley (Model 2803) and Dead-end pulley (Model 2804) blocks shall be adjustable and shall be equipped with 5-inch diameter sleeve-bearing wheels adequately guarded. A rubber bumper shall be inserted between each curtain carrier to function as spacer and noise reducer. The manufacturer shall furnish two end stops for placement at each track end and a detachable floor block (Model DFB-2) for increasing cord tension. Stretch-resistant operating cord (Model 2828 for hand operation and Model 2829 for machine operation) shall have synthetic or wire center and shall be of 3/8-inch, or 3/16-inch diameter. Aluminum tracks are not acceptable. Tracks and components shall be from single manufacturer; using components from multiple manufacturers is expressly not permitted.

C. Cyclorama Tracks: Rig-I-Flex #142R CWANA as manufactured by Automatic Devices Company. Curtain tracks (Model 1400) shall be of 11-gauge extruded aluminum I-Beam construction consisting of a center rib and top, intermediate, and bottom flanges. Each curtain carrier (Model 4237) shall be spaced on 12" centers and shall be of steel construction to include two solid nylon wheels rolling on two separate parallel treads. Track shall be rigidly supported from hanging clamps (Model 4208). This model track system is for walk-along operation. Tracks and components shall be from single manufacturer; using components from multiple manufacturers is expressly not permitted.

2.6 RIGGING AND BATTENS

A. Dead-hung Items: Provide battens, chains, beam clamps and supports for all dead-hung items as specified. All terminations to battens shall be made using properly sized batten clamps as specified.

B. Dead-Hung Battens: 1-1/2 inch Scheduled 40 premium black pipe with 18-inch long 1-9/16-inch OD x .250 inch thick wall structural tubing internal splices bolted in place. Batten finish shall be KZ2148BK UV-cured acrylate monomer as manufactured by Allied Photochemical Aluminum battens are not acceptable.

C. Dead-Hung Chain Supports: Chain shall be 1/4-inch grade 30 zinc plated weld link proof coil chain in continuous un-spliced lengths with a WLL of no less than 1,300 pounds as distributed by Pittsburgh Stage, Inc., or equal.

D. Shackles: Shackles shall be drop forged galvanized screw-pin anchor shackles. Shackles shall have a WLL of no less than 1,000 pounds at trim chains terminations and 1,500 pounds at arbor terminations. Shackle pins shall be moused with seizing wire or other approved device to positively prevent unscrewing. Shackles shall meet or exceed federal specification RR-C-271D Requirements.

E. Beam Clamps: Beam clamps shall be used at all dead hung supports connecting to structural steel beams. Beam clamps shall encompass both sides of the beam flange and shall have a minimum RWL of 750 lbs. PSI model #BC or Coffing BC series.

F. Pipe Clamps: 1-1/2-inch Pipe clamps shall be used at all dead hung supports connecting to the pipe battens. Pipe clamps shall encompass the pipe and shall include two 3/8-inch grade 5 bolts and nyloc nuts. Third hole at top of clamp shall receive termination hardware as required. Pipe clamp shall have rounded edges and a minimum RWL of 750 lbs. Use appropriately sized pipe clamps for the suspension of all dead-hung tracks and battens and at all track splice locations. As Distributed by Pittsburgh Stage, Inc.., or equal.

G. Swage Fittings: Properly sized copper oval sleeves for cable terminations are to be as manufactured by the National Telephone Supply Company or Loos & Co, Inc. Terminations must maintain 100 percent of the cables break strength. Apply crimps per manufacturer's instructions and recommended crimping tool. All swage fittings used shall be by one manufacturer and terminated in a uniform manner.

H. Thimbles: Appropriately sized heavy-duty thimbles shall be used in the termination of all wire rope. Thimbles shall be installed to manufacturers' recommendations. As distributed by Pittsburgh Stage, Inc., or equal.

I. Spans: Appropriately load rated strut channel or structural steel welded in place or attached using the manufacturers' recommended clips. Spans shall be chemically coated to prevent corrosion. Furnish and install spans as necessary for a proper installation. As distributed by Pittsburgh Stage, Inc., or equal.

J. Bridles: Any bridles shall be in conformance with ANSI standard E1.4-2009 Part 3.

K. Finishes: Provide all items with manufacturer's standard plating or coating to prevent corrosion unless otherwise specified.

L. Weldments: Required weldments within equipment and in field shall conform to ANSI/AWS D1.1 Structural Welding Code and be performed by welder certified to this code.

PART 3 - EXECUTION

3.1 CUTTING AND PATCHING – PREPARATION

A. The theatrical equipment subcontractor shall do all required cutting, drilling, tapping and fitting to properly install and secure his work in place. Cutting or drilling existing structural work shall have prior approval of the Owner/Architect/Engineer.

3.2 INSTALLATION OF EQUIPMENT

A. The equipment schedule, design and locations of all stage equipment are the sole responsibility of this stage equipment contractor. Install equipment in accord with manufacturer's published instructions.

B. All other trades shall closely coordinate their work so as not to impact or conflict with the location and design of the stage equipment.

3.3 SIGNAGE AND LABELING

A. Certificate of Inspection: Provide certificate of rigging inspection upon completion dated and signed by the onsite Theater Rigger. Install in a tamperproof sign holder as specified.

B. Sign Holder: Steel enclosure with tempered glass locking door as distributed by McMaster Carr to house certificate of rigging inspection. Furnish and permanently affix one sign holder to house the certificate of inspection in a conspicuous area on the stage wall. McMaster Carr Part #112T61.

3.4 CLEANING

A. During the course of this work, the theatrical equipment subcontractor shall daily remove to collection points at the job site all looser trash and scrap materials.

3.5 TESTING, INSPECTION, ADJUSTMENTS, AND COMMISSIONING

A. The completed installation of all equipment properly installed, shall be tested and operated for the approval of the Owner/Architect.

B. The completed stage equipment installation must be inspected by the onsite ETCP Certified Theater Stage Rigger to ensure the quality and safety of the installation and a certificate of inspection installed in the tamperproof sign holder as specified.

C. Any workmanship or materials found to be defective, improperly placed, not in strict conformity with the specifications, or defaced or injured through the action of fire or the elements, through usage by the Contractor or his employees, or from any other cause, shall be removed immediately from the premises when directed by the Owner/Architect.

D. Provide the services of the field service representative to train the owner's staff in the operation, programming, use, and maintenance of the complete theatrical lighting and rigging system. The training session shall be a maximum of four (4) hours to be performed in one visit to site.

END OF SECTION 116100

SECTION 122413 - ROLLER WINDOW SHADES

PART 1 - GENERAL

1.1 RELATED DOCUMENTS

A. Drawings and general provisions of the Contract, including General and Supplementary Conditions and Division 01 Specification Sections, apply to this Section.

1.2 SUMMARY

A. Section Includes:

1. Manually operated roller shades with single rollers.
2. Manually operated roller shades with double rollers.
3. Motor-operated roller shades with single rollers.
4. Motor-operated roller shades with double rollers.

B. Related Requirements:

1. Division 6 Section "Miscellaneous Rough Carpentry" for wood blocking and grounds for mounting roller shades and accessories.
2. Division 7 Section "Joint Sealants" for sealing the perimeters of installation accessories for light-blocking shades with a sealant.
3. Division 26 Section “Electrical” for electrical supply, conduit, and wiring for motorized window shades.

1.3 ACTION SUBMITTALS

A. Product Data: For each type of product.

1. Include styles, material descriptions, construction details, dimensions of individual components and profiles, features, finishes, and operating instructions for roller shades.

B. Shop Drawings: Show fabrication and installation details for roller shades, including shadeband materials, their orientation to rollers, and their seam and batten locations.

1. Motor-Operated Shades: Include details of installation and diagrams for power, signal, and control wiring.

C. Samples for Initial Selection: For each type and color of shadeband material.

1. Include Samples of accessories involving color selection.

D. Roller-Shade Schedule: Use same designations indicated on Drawings.

1.4 INFORMATIONAL SUBMITTALS

A. Qualification Data: For Installer.

B. Product Certificates: For each type of shadeband material, signed by product manufacturer.

C. Product Test Reports: For each type of shadeband material, for tests performed by manufacturer and witnessed by a qualified testing agency.

1.5 CLOSEOUT SUBMITTALS

A. Maintenance Data: For roller shades to include in maintenance manuals.

1.6 QUALITY ASSURANCE

A. Installer Qualifications: Fabricator of products.

1.7 DELIVERY, STORAGE, AND HANDLING

A. Deliver roller shades in factory packages, marked with manufacturer, product name, and location of installation using same designations indicated on Drawings.

1.8 FIELD CONDITIONS

A. Environmental Limitations: Do not install roller shades until construction and finish work in spaces, including painting, is complete and dry and ambient temperature and humidity conditions are maintained at the levels indicated for Project when occupied for its intended use.

B. Field Measurements: Where roller shades are indicated to fit to other construction, verify dimensions of other construction by field measurements before fabrication and indicate measurements on Shop Drawings. Allow clearances for operating hardware of operable glazed units through entire operating range. Notify Architect of installation conditions that vary from Drawings. Coordinate fabrication schedule with construction progress to avoid delaying the Work.

PART 2 - PRODUCTS

2.1 MANUFACTURERS

A. Manufacturers: Subject to compliance with requirements, provide products by one of the following:

1. Basic of Design:

a. Draper Inc., Manual Flexshade.
b. Draper Inc., Motorized Flexshade.

2. Approved Manufacturers:

a. Jacksons Window Shoppe.
b. Hunter Douglas Contract.
c. Levelor Commercial.
d. MechoShade Systems, Inc.
e. SWF Contract.

B. Source Limitations: Obtain roller shades from single source from single manufacturer.

2.2 MANUALLY OPERATED SHADES WITH SINGLE ROLLERS

A. Chain-and-Clutch Operating Mechanisms: With continuous-loop bead chain and clutch that stops shade movement when bead chain is released; permanently adjusted and lubricated. Manufacturer's standard which must comply with ANSI/WCMA A100.1, American National Standard for Safety of Corded Window Covering Products.

1. Bead Chains: Stainless steel.

a. Loop Length: Full length of roller shade.
b. Limit Stops: Provide upper and lower ball stops.
c. Chain-Retainer Type: Chain tensioner, jamb mounted.

B. Rollers: Corrosion-resistant steel or extruded-aluminum tubes of diameters and wall thicknesses required to accommodate operating mechanisms and weights and widths of shadebands indicated without deflection. Provide with permanently lubricated drive-end assemblies and idle-end assemblies designed to facilitate removal of shadebands for service.

1. Roller Drive-End Location: Right side of inside face of shade.
2. Direction of Shadeband Roll: Regular, from back of roller.
3. Shadeband-to-Roller Attachment: Manufacturer's standard method.

C. Mounting Hardware: Brackets or endcaps, corrosion resistant and compatible with roller assembly, operating mechanism, installation accessories, and mounting location and conditions indicated.

D. Shadebands:

1. Shadeband Material: Light-filtering Series.
2. Shadeband Bottom (Hem) Bar: Steel or extruded aluminum.

a. Type: Enclosed in sealed pocket of shadeband material
b. Color and Finish: As selected by Architect from manufacturer's full range of colors.

E. Installation Accessories:

1. Front Fascia: Aluminum extrusion that conceals front and underside of roller and operating mechanism and attaches to roller endcaps without exposed fasteners.

    a. Shape: L-shaped
    b. Height: Manufacturer's standard height required to conceal roller and shadeband when shade is fully open, but not less than 3 inches.

2. Endcap Covers: To cover exposed endcaps.
3. Back Covers for Roller Shades at Interior Windows: Provide and install back cover for all interior shades.
4. Installation Accessories Color and Finish: As selected from manufacturer's full range.

F. Location: Shades to be applied to exterior applications as indicated on the Drawings; refer to reflected ceiling plans.

2.3 MANUALLY OPERATED SHADES WITH DOUBLE ROLLERS

A. Chain-and-Clutch Operating Mechanisms: With continuous-loop bead chain and clutch that stops shade movement when bead chain is released; permanently adjusted and lubricated. Manufacturer's standard which must comply with ANSI/WCMA A100.1, American National Standard for Safety of Corded Window Covering Products.

1. Bead Chains: Stainless steel.

    a. Loop Length: Full length of roller shade.
    b. Limit Stops: Provide upper and lower ball stops.
    c. Chain-Retainer Type: Chain tensioner, jamb mounted.

B. Rollers: Corrosion-resistant steel or extruded-aluminum tubes of diameters and wall thicknesses required to accommodate operating mechanisms and weights and widths of shadebands indicated without deflection. Provide with permanently lubricated drive-end assemblies and idle-end assemblies designed to facilitate removal of shadebands for service.

1. Double-Roller Mounting Configuration: Offset, outside roller over and inside roller under.
2. Inside Roller:

    a. Drive-End Location: Right side of interior face of shade
    b. Direction of Shadeband Roll: Regular, from back (exterior face) of roller.

3. Outside Roller:

    a. Drive-End Location: Left side of interior face of shade.
    b. Direction of Shadeband Roll: Regular, from back (exterior face) of roller.

4. Shadeband-to-Roller Attachment: Manufacturer's standard method.

C. Mounting Hardware: Brackets or endcaps, corrosion resistant and compatible with roller mounting configuration, roller assemblies, operating mechanisms, installation accessories, and installation locations and conditions indicated.

D. Inside Shadebands:

1. Shadeband Material: Light-filtering fabric.
2. Shadeband Bottom (Hem) Bar: Steel or extruded aluminum.

    a. Type: Enclosed in sealed pocket of shadeband material.
    b. Color and Finish: As selected by Architect from manufacturer's full range of colors.

E. Outside Shadebands:

1. Shadeband Material: Light-blocking fabric.
2. Shadeband Bottom (Hem) Bar: Steel or extruded aluminum.

    a. Type: Enclosed in sealed pocket of shadeband material.
    b. Color and Finish: As selected by Architect from manufacturer's full range of colors.

F. Installation Accessories:

1. Front Fascia: Aluminum extrusion that conceals front and underside of roller and operating mechanism and attaches to roller endcaps without exposed fasteners.

    a. Shape: L-shaped
    b. Height: Manufacturer's standard height required to conceal roller and shadeband when shade is fully open, but not less than 3 inches.

2. Back Covers: Aluminum extrusion that conceals back and top of roller and operating mechanism and attaches to roller endcaps without exposed fasteners.

    a. Shape: L-shaped
    b. Height: Manufacturer's standard height required to conceal roller and shadeband when shade is fully open, but not less than 8 inches.
    c. Depth: Manufacturer's standard depth required to conceal roller and shadeband when shade is fully open, but not less than 6 inches.

3. Endcap Covers: To cover exposed endcaps.
4. Installation Accessories Color and Finish: As selected from manufacturer's full range.

G. Location: Shades to be applied to exterior applications as indicated on the Drawings; refer to reflected ceiling plans.

2.4 MOTORIZED SHADES WITH SINGLE ROLLERS

A. Motorized Operating System: Provide factory-assembled, shade-operator system of size and capacity and with features, characteristics, and accessories suitable for conditions indicated, complete with electric motor and factory-prewired motor controls, power disconnect switch, enclosures protecting controls and operating parts, and accessories required for reliable operation without malfunction. Include line-wiring from motor controls to motors. Coordinate operator wiring requirements and electrical characteristics with building electrical system.

1. Electrical Components: Listed and labeled as defined in NFPA 70, by a qualified testing agency, and marked for intended location and application.
2. Electric Motor: Manufacturer's standard tubular, enclosed in roller.

    a. Electrical Characteristics: 110-V ac

3. Remote Control: Electric controls with NEMA ICS 6, Type 1 enclosure for recessed or flush mounting. Provide the following for remote-control activation of shades:
    a. Individual/Group Control Station: Momentary-contact, three-position, rocker-style, wall-switch-operated control station with open, close, and center off functions for individual and group control.
    b. Color: As selected by Architect from manufacturer's full range.

4. Operating Features:

    a. Group switching with integrated switch control; single faceplate for multiple switch cutouts.

B. Rollers: Corrosion-resistant steel or extruded-aluminum tubes of diameters and wall thicknesses required to accommodate operating mechanisms and weights and widths of shadebands indicated without deflection. Provide with permanently lubricated drive-end assemblies and idle-end assemblies designed to facilitate removal of shades for service.

1. Roller Drive-End Location: Right side of inside face of shade
2. Direction of Shadeband Roll: Regular, from back of roller.
3. Shadeband-to-Roller Attachment: Manufacturer's standard method.

C. Mounting Hardware: Brackets or endcaps, corrosion resistant and compatible with roller mounting configuration, roller assemblies, operating mechanisms, installation accessories, and installation locations and conditions indicated.

D. Shadebands:

1. Shadeband Material: Light-filtering Series.
2. Shadeband Bottom (Hem) Bar: Steel or extruded aluminum.

    a. Type: Enclosed in sealed pocket of shadeband material
    b. Color and Finish: As selected by Architect from manufacturer's full range of colors.

E. Installation Accessories:

1. Front Fascia: Aluminum extrusion that conceals front and underside of roller and operating mechanism and attaches to roller endcaps without exposed fasteners.

    a. Shape: L-shaped.
    b. Height: Manufacturer's standard height required to conceal roller and shadeband assembly when shade is fully open, but not less than 4 inches.

2. Back Covers: Aluminum extrusion that conceals back and top of roller and operating mechanism and attaches to roller endcaps without exposed fasteners.

a. Shape: L-shaped
b. Height: Manufacturer's standard height required to conceal roller and shadeband when shade is fully open, but not less than 4 inches.
c. Depth: Manufacturer's standard depth required to conceal roller and shadeband when shade is fully open, but not less than 4 inches.

3. Endcap Covers: To cover exposed endcaps.
4. Side Channels: With light seals and designed to eliminate light gaps at sides of shades as are drawn-down.
5. Installation Accessories Color and Finish: As selected from manufacturer's full range.

F. Location: Shades to be applied to exterior applications as indicated on the Drawings; refer to reflected ceiling plans.

2.5 MOTOR-OPERATED, DOUBLE-ROLLER SHADES

A. Motorized Operating System: Provide factory-assembled, shade-operator system of size and capacity and with features, characteristics, and accessories suitable for conditions indicated, complete with electric motor and factory-prewired motor controls, power disconnect switch, enclosures protecting controls and operating parts, and accessories required for reliable operation without malfunction. Include line-wiring from motor controls to motors. Coordinate operator wiring requirements and electrical characteristics with building electrical system.

1. Electrical Components: Listed and labeled as defined in NFPA 70, by a qualified testing agency, and marked for intended location and application.
2. Electric Motor: Manufacturer's standard tubular, enclosed in roller.

a. Electrical Characteristics: 110-V ac

3. Remote Control: Electric controls with NEMA ICS 6, Type 1 enclosure for recessed or flush mounting. Provide the following for remote-control activation of shades:
a. Individual/Group Control Station: Momentary-contact, three-position, rocker-style, wall-switch-operated control station with open, close, and center off functions for individual and group control.
b. Color: As selected by Architect from manufacturer's full range.

4. Operating Features:

a. Group switching with integrated switch control; single faceplate for multiple switch cutouts.

B. Rollers: Corrosion-resistant steel or extruded-aluminum tubes of diameters and wall thicknesses required to accommodate operating mechanisms and weights and widths of shadebands indicated without deflection. Provide with permanently lubricated drive-end assemblies and idle-end assemblies designed to facilitate removal of shades for service.

1. Double-Roller Mounting Configuration: Offset, outside shade over and inside shade under.

2. Inside Roller:

    a. Drive-End Location: Right side of interior face of shade.
    b. Direction of Shadeband Roll: Regular, from back (exterior face) of roller.

3. Outside Roller:

    a. Drive-End Location: Right side of interior face of shade.
    b. Direction of Shadeband Roll: Regular, from back (exterior face) of roller.

4. Shadeband-to-Roller Attachment: Adhesive strip.

C. Mounting Hardware: Brackets or endcaps, corrosion resistant and compatible with roller mounting configuration, roller assemblies, operating mechanisms, installation accessories, and installation locations and conditions indicated.

D. Inside Shadebands:

1. Shadeband Material: Light-filtering fabric.
2. Shadeband Bottom (Hem) Bar: Steel or extruded aluminum.

    a. Type: Enclosed in sealed pocket of shadeband material.
    b. Color and Finish: As selected by Architect from manufacturer's full range.

E. Outside Shadebands:

1. Shadeband Material: Light-blocking fabric.
2. Shadeband Bottom (Hem) Bar: Steel or extruded aluminum.

    a. Type: Enclosed in sealed pocket of shadeband material.
    b. Color and Finish: As selected by Architect from manufacturer's full range.

F. Installation Accessories:

1. Front Fascia: Aluminum extrusion that conceals front and underside of roller and operating mechanism and attaches to roller endcaps without exposed fasteners.

    a. Shape: L-shaped.
    b. Height: Manufacturer's standard height required to conceal roller and shadeband assembly when shade is fully open, but not less than 3 inches.

2. Back Covers: Aluminum extrusion that conceals back and top of roller and operating mechanism and attaches to roller endcaps without exposed fasteners.
    a. Shape: L-shaped
    b. Height: Manufacturer's standard height required to conceal roller and shadeband when shade is fully open, but not less than 8 inches.

3. Endcap Covers: To cover exposed endcaps.

4. Side Channels: With light seals and designed to eliminate light gaps at sides of shades as are drawn-down.
5. Installation Accessories Color and Finish: As selected from manufacturer's full range.

F. Location: Shades to be applied to exterior applications as indicated on the Drawings; refer to reflected ceiling plans.

2.6 SHADEBAND MATERIALS

A. Shadeband Material Flame-Resistance Rating: Comply with NFPA 701 Testing by a qualified testing agency. Identify products with appropriate markings of applicable testing agency.

B. Light-Filtering Fabric: Woven fabric, stain and fade resistant.

1. Source: Mermet, T- Screen
2. Type: PVC Coated Fiberglass.
3. Weight: 13.3 oz per yard.
4. Openness Factor: 1 percent.
5. Color: As selected by Architect from manufacturer’s full range.

C. Blackout Fabric: Woven fabric, stain and fade resistant.

1. Source: Indiana Coated Fabrics (ICF), Apagon Style III
2. Type: Fiberglass textile with PVC film bonded to both sides.
3. Weight: 12.8 oz per square yard
4. Color: As selected by Architect from manufacturer's full range. Provide a minimum of (8) color selections.
5. Location: Refer to drawings.

2.7 ROLLER-SHADE FABRICATION

A. Product Safety Standard: Fabricate roller shades to comply with WCMA A 100.1, including requirements for flexible, chain-loop devices; lead content of components; and warning labels.

B. Unit Sizes: Fabricate units in sizes to fill window and other openings as follows, measured at 74 deg F.

1. Between (Inside) Jamb Installation: Width equal to jamb-to-jamb dimension of opening in which shade is installed less 1/4 inch per side or 1/2-inch total, plus or minus 1/8 inch. Length equal to head-to-sill or -floor dimension of opening in which shade is installed less 1/4 inch plus or minus 1/8 inch.

C. Shadeband Fabrication: Fabricate shadebands without battens or seams to extent possible except as follows:

1. Vertical Shades: Where width-to-length ratio of shadeband is equal to or greater than 1:4 provide battens and seams at uniform spacings along shadeband length to ensure shadeband tracking and alignment through its full range of movement without distortion of the material.

PART 3 - EXECUTION

3.1 EXAMINATION

A. Examine substrates, areas, and conditions, with Installer present, for compliance with requirements for installation tolerances, operational clearances and other conditions affecting performance of the Work.

B. Proceed with installation only after unsatisfactory conditions have been corrected.

3.2 ROLLER-SHADE INSTALLATION

A. Install roller shades level, plumb, and aligned with adjacent units according to manufacturer's written instructions.

1. Hardware shall be mounted to jamb or head of window opening. Mounting to the frame is NOT approved.

3.3 ADJUSTING

A. Adjust and balance roller shades to operate smoothly, easily, safely, and free from binding or malfunction throughout entire operational range.

3.4 CLEANING AND PROTECTION

A. Clean roller-shade surfaces after installation, according to manufacturer's written instructions.

B. Provide final protection and maintain conditions, in a manner acceptable to manufacturer and Installer that ensure that roller shades are without damage or deterioration at time of Substantial Completion.

C. Replace damaged roller shades that cannot be repaired, in a manner approved by Architect, before time of Substantial Completion.

END OF SECTION 122413

SECTION 123216 – EDUCATIONAL CASEWORK

PART 1 - GENERAL

1.1 RELATED DOCUMENTS

A. Drawings, Division 0 - Bidding and Contract Requirements and Division 1 General Requirements apply to this Section.

1.2 SCOPE OF WORK

A. Provide all plastic laminate casework and related accessory items as specified herein. Refer to contract documents for specific details and requirements. Casework includes all storage components, accessory items, closure, fillers, and framing necessary for a complete installation, as identified by manufacturers product/model number, or reference thereto.

B. Specialty product systems as indicated by product designation within contract documents shall include, but not limited to: Steel framed island assemblies, steel framed technology clusters, adjustable and re-locatable casework and computer modules.

C. General Conditions: The General Conditions, Supplementary General Conditions, Special Conditions, and General Requirements apply to all work in this Division.

D. Provide coordination with Mechanical and Electrical contractors for their respective installation of mechanical and electrical fixtures.

1.3 RELATED REQUIREMENTS

A. Division 6 Section "Rough Carpentry" for wood furring, blocking, shims, and hanging strips required for installing paneling and that are concealed within other construction before paneling installation.

B. Division 6 Section “Interior Architectural Millwork” for custom millwork unless specified herein or so noted on plans as included within this section.

C. Division 9 Section “Resilient Base and Accessories” for resilient base applied to casework.

D. Division 12 Section “Simulated Stone Fabrication” for solid surface countertops/backsplashes and transaction ledges.

E. Division 22, 23, 26 for sinks, faucets, fittings, traps, stops, tail pieces, vacuum breakers, and other fixtures, electrical and mechanical runs and connections.

F. Fixture installation/services connections: Setting and installation of equipment and fixtures, and related utility connections, are provided under the other sections of the Project Specification governing the utility.

1.4 SUBMITTALS

A. Submit in accordance with General, Supplementary, and Special Conditions.

B. Submit shop drawings for approval in the form of one reproducible sepia and one print. Show materials, dimensions, cabinet-cut details, and sink locations.

C. Samples: Contractor shall provide manufacturer's color PDFs of images of plastic laminate manufacturers for review & approval. Actual samples are NOT required unless specifically requested by the architect/interior designer. Architect to have color choice from full range of laminates, including premium series.

1.5 QUALIFICATIONS

A. Case System is used to establish a standard of quality subject to compliance with requirements, of the Instructions to Bidders. Products that may be incorporated in the work include:

1. Case Systems.
2. Mastercraft.
3. TMI Systems Corporation.
4. Stevens Advantage Cabinet Systems.
5. Greene Manufacturing (as indicated on drawings).

B. Manufacturers shall submit evidence of at least 5 years experience and installations for similar type of project.

C. Manufacturers shall submit certified product test data in accordance with ANSI A161.1-1980, NEMA LD3-1991, and general static load testing performed and certified by an independent testing agency, covering the following areas of product performance, with these minimum results.

1.	Base cabinet construction/racking test:	800 lbs.
2.	Cabinet front joint loading test:	425 lbs.
3.	Wall cabinet static load test:	2,200 lbs.
4.	Drawer front joint loading test:	600 lbs.
5.	Drawer construction/static load test:	635 lbs.
6.	Cabinet adjustable shelf support device/static load test:	300 lbs.
7.	Particleboard screw holding power:	350 lbs.

D. The following performance details are project requirements and must be met by all Bidders whether named herein, or approved by Addendum. Deviations will not be allowed.

1. Design:

   a. All Casework: Case Systems used to establish a standard of quality. Standard Reveal Overlay Cabinet door design with door/drawer front edge having 3mm PVC and cabinet body edge having Flat Edge PVC.

2. ADA-Americans with Disabilities Act Requirements: The special requirements specified herein shall be met, where specifically indicated on architectural plans as "ADA", or by

General Note. To be in compliance with Federal Register Volume 56, No. 144, Rules and Regulations.

3. Lamination System: Doors, finished end panels, and other decorative exterior laminate surfaces shall be composed of minimum 3/4 inch core, laminated exterior with .030 inch high pressure plastic laminate, and interior with .020 inch high pressure cabinet liner. Lamination with hybrid P.V.A. Type III water resistant adhesives. Total thickness 13/16 inch. No exceptions.
4. Structural Cabinet Body: Cabinet backs shall be minimum 3/8 inch thick, inset from rear of body, fully housed four sides, and back-shimmed. Provide 3/4 inch thick stiffeners glued and fastened to back/body as specified herein. Back perimeter and stiffeners to be fully sealed with hot melt adhesive.
5. Interior Space: All cabinets shall have clear span interiors. No vertical dividers allowed unless by specified architectural design.
6. Heavy Components: Wall cabinet tops and bottoms, and all bookstack shelves shall be minimum 1 inch thick, for additional load support. Shelves in door cabinets 30 inches wide and over shall be 1 inch thick. Shelves in open cabinets, regardless of width, shall be 1 inch thick.
7. Structural Drawer Body: Drawer body material shall be multi-directional fiberboard with bottom recessed, captured all four sides and sealed with hot melt adhesive. Provide under body stiffener as specified herein. Particleboard bodies and/or surface-applied bottoms are not acceptable.
8. Drawer Suspension: Drawer slides shall be self-closing design, epoxy power-coated, with positive instop, outstop, and out-keeper. Kynamic (operational) load rating to be minimum 100 lbs. Minimum 150 lb. static load rating.
9. Structural Cabinet Support: Cabinet sub base shall be of a separate and continuous ladder-type platform design leveled and floor mounted prior to cabinet body replacement. Material to be exterior grade plywood. No cabinet sides-to-floor will be allowed.

E. Architect/Owner's opinion and decision shall be final in the evaluation of manufacturer's products for approval to bid or award of contract.

F. Guarantee: All materials produced by the Casework Manufacturer shall be guaranteed for a period of five years from manufacturer’s defects and workmanship. Other materials and equipment shall carry the Guarantee of the product manufacturer.

PART 2 - PRODUCTS

2.1 MATERIALS

A. Laminated Plastics/Finishes:

1. High pressure plastic laminate, .030 inch thickness, for exterior cabinet surfaces shall meet NEMA LD3-1991 GP28 standards including thickness.

2. Exterior Color Selection Available:

a. Vertical surface laminate finish, standard and premium, from manufacturer's full range of colors consisting of solid colors, patterns and wood grains. Provide a minimum of (125) laminates.
b. Total of 6 different colors available per project.
c. Manufacturers: Laminates to be selected from a combination of the following laminate manufactures.

1. Wilsonart.
2. Formica.
3. Pionite.
4. Nevamar.

3. Plastic Laminate Balancing Sheet: White high pressure cabinet liner, .020 inch thickness shall meet NEMA LD3-1991 CL 20 standards. Use for balancing exterior surface laminates.

4. Pressure Fused Laminate/Interior Surfacing:

a. Melamine resin impregnated, 100 gram PSM minimum, surface laminated to core under pressure.
b. Shall meet NEMA LD3.1-1991 GP28 standards and NEMA LD3-1991 CL20 standards.
c. White pressure fused laminate for cabinet interiors behind door and drawers and underside of wall cabinet unless otherwise specified. Interiors of all open cabinets are to be HPL.
d. Shall be balanced at all concealed surfaces with phenolic backer. Unsurfaced coreboard not allowed.

B. High Performance Particle Board Core:

1. Particleboard to be 47 lb. density, of balanced 3-ply construction with moisture content not to exceed 8%. Particleboard shall conform to ANSI A208-1-1993, Type M-3.
2. Particleboard cabinet components to be of the following minimum core thickness prior to lamination:

a. 3/8" cabinet backs.
b. 1/2": dividers, as detailed.
c. 3/4": base and tall cabinet tops and bottoms, cabinet sides, drawer spreaders, door, drawer head, cabinet back rear hang strips, dividers as detailed, exposed cabinet backs.
d. 1": wall cabinet tops and bottoms, door-cabinet shelving 30 inch width and over, exposed cabinet shelving and off-wall shelving of all widths.

C. Edging Types: Provide one or more of the following in accordance with Paragraph 2.1.D, "Edging Locations":

1. 3mm thick PVC: Solid, high-impact, purified, color-thru, acid resistant, pre-lamination primed edging, machine-applied with hot melt adhesives, automatically trimmed, inside/outside length-radiused for uniform appearance, buffed and corner-radiused for consistent design.
2. Flat Edge PVC, .020 inch. Solid, high impact, purified, color-thru, acid resistant PVC edging machine-applied with hot melt adhesives, automatically trimmed face, back, and

corners for uniform appearance.

D. Edging Locations:

1. Edging locations on ALL Casework: provide edging types at the following locations:

   d. Door/Drawer-Front edging shall be 3mm PVC selected by Architect from manufacturer's full range of colors. Provide a minimum of (52) colors.
   e. Cabinet Body edge, including door/drawer front spacer rail shall be flat edge PVC, color matched to door/drawer face.
   c. Interior body component edging, interior dividers, drawer body, shelf shall be FlatEdge PVC to match cabinet interior surface color, white.

E. Hardware:

1. Hinges:

   a. Heavy duty, five knuckle 2 3/4 inch institutional type hinge shall meet ANSI/BHMA A156.9 Grade 1 requirements. Mill ground, hospital tip, tight pin feature with all edges eased. Hinge to be full wrap around type of tempered steel .095 inch thick. Each hinge to have minimum 9 screws, #7, 5/8 inch FHMS to assure positive door attachment.
   b. One pair per door to 48 inch height. One and one-half pair over 48 inch in height. Hinge to accommodate 13/16 inch thick laminated door and allow 270 degree swing.
   c. Finish to be LH-301 ChromeCoat Powder Finish.

2. Pulls: Wire design, LH-325 nylon, 4 inch; in Brushed Chrome.
3. Drawer Slides:

   a. Standard Drawers: LH-376, self-closing design. White epoxy powder coated with positive in-stop, out-stop, and out-keeper to maintain drawer in 80% open position. Captive nylon rollers, front and rear. Minimum 100 lb. dynamic load rating at 50,000 cycles. Minimum 150 lb. static load rating.
   b. Paper Storage Drawers: Full extension, 3-part progressive opening slide, minimum 100 lb., zinc plated or epoxy coated at manufacturer's option
   c. Student Island Assembly Drawers, Full extension, 3-part progressive opening slide, minimum 100 lb. Zinc plated or epoxy coated at manufacturer's option
   d. File Drawers: Full extension, 3-part progressive opening slide, minimum 100 lb. zinc plated or epoxy coated at manufacturer's option.
   e. Provide body mounted molded rails for hanging file system for legal or letter size as indicated by manufacturer's model number

4. Catches: Catch to provide opening resistance in compliance with the Americans with Disabilities Act.

   a. Provide one top-mounted magnetic catch for base, wall and tall cabinet door. Catch housing to be molded in White. LH-340ADA.
   b. LH-345 Roller catch for mobile cabinets.

5. Adjustable Shelf Supports: To be LH-354 twin pin design with anti tip-up shelf restraints for both 3/4 inch and 1 inch shelves. Design to include keel to retard shelf slide-off, and

slot for ability to mechanically attach shelf to clip. Load rating to be minimum 300 lbs. each support without failure, reference 1.4.D. Cabinet interior sides shall be flush, without shelf system permanent projection.

6. Wardrobe Rod: To be 1 1/16 inch rod, LH-362, supported by LH-363 flanges.

   a. *Note: Wardrobe Rods shall be adjustable with mounting at 48 inches and 72 inches A.F.F. to the center of the rod.*

7. Locks: To be disc tumbler lock keyed alike per room and master keyed. Dull chrome finish.

   a. Hinged doors and drawers National Lock No. M4-7054.

8. Coat Hooks: Note Coat Hooks are to be mounted to the casework at 48 inches A.F.F. to the center of the hook.

   a. Double Coat Hooks, ceiling mount - Satin Aluminum
   b. Single Coat Hooks, ceiling mount - Satin Aluminum
   c. Double Coat hooks, wall mount - Satin Aluminum
   d. Single Coat Hooks, wall mount - Satin Aluminum

9. Wheel Casters:

   a. Casters for low mobile units to be LH-390 4 inch x 1 1/16". Minimum 275 lb. Load rating per caster. Wheel brakes on front two casters.
   b. LH-386 swivel casters for standard mobile cabinets shall be plate type caster with ball bearing swivel. Size shall be 5 inches for tall mobiles, with 1 1/16 inch wide tread for carpet or hard cover floor. Wheel brakes on front two casters. Minimum 300 lb. load rating per caster.

10. Mobile Steel Frame Structure:

    a. Low mobile cabinets shall be designed with a structurally layered base to which above specified plate-type casters are bolted.

11. Molded Personal Pencil Drawer: High-Impact, Medical Grade Polystyrene, FDA approved, with in-stop, out-stop, and self closing features. Compartmented drawer body molded in Black with Black epoxy coated metal slides. Provide where indicated by product designation on plans or as scheduled.

12. Cable Trays: Unless otherwise specified, cable trays shall be 6 inches high x 4 inches deep returned vertically 3 inches. Cable trays shall be of 16 gauge steel with hemmed return, or high impact Styrene with reinforced exist-ends, Black. When so designated by architectural detail, or product number designation, cable trays shall include integral seven plug grounded duplex electrical strip with surge protector, and 6 foot three wire cord/socket.

13. Padlock Hasp: Zinc, two-piece, non-hinged hasp.

14. Grommets: For cable passage through countertops; 1-1/4-inch outside diameter molded-plastic grommets and matching plastic caps with slot for wire passage. Provide standard color selections: Black, Almond, Grey or White.

2.2 CONSTRUCTION

A. Detailed Requirements for Cabinet Construction

1. Sub-Base:

   a. Cabinet Sub-Base: To be separated and continuous (no cabinet body sides-to-floor), water resistant exterior grade plywood with concealed fastening to cabinet bottom. Ladder-type construction of front, back and intermediates to form a secure and level platform to which cabinets attached.
   b. Tubular steel 1 1/4" square base in brushed chrome, or black, furnished where specified.

2. Cabinet Top and Bottom:

   a. Solid sub-top to be furnished for all base and tall cabinets.
   b. Wall cabinet and library stack bottoms and tops to be 1 inch thick.
   c. Exterior exposed wall cabinet bottoms to be Pressure Fused White laminate both sides. Assembly devices to be concealed on bottom side of wall cabinets.

3. Cabinet Ends:

   a. Holes drilled for adjustable shelves 1 1/4 inch on center.
   b. Exposed exterior cabinet ends to be laminated with high pressure plastic laminate, balanced with high pressure cabinet liner interior surface.
   c. Front edges shall be flush with door/drawer face.

4. Fixed and Adjustable Shelves:

   a. Thickness: Behind doors, to be 3/4 inch to 27 inches wide. One inch shelving at 30 inch wide cabinet and over.
   b. Thickness at all widths of open cabinets to be 1 inch.
   c. All tall cabinets shall be provided with an intermediate fixed shelf to maintain internal dimensional stability under heavy loading conditions as well as an intermediate 3/4" thick stretcher located behind the back panel and be secured between the cabinet ends with mechanical fasteners. The stretcher shall be secured to the shelf through the back with #8 x 2" plated flat head screws.

5. Cabinet Backs:

   a. Cabinet back to be fully housed into sides, top, and bottom, recessed 7/8 inch from cabinet rear. Rear, unexposed, side of back to receive continuous bead of hot melt adhesive at joint between back and sides/top/bottom.
   b. Hang rails shall be glued to rear of cabinet back and mechanically fastened to cabinet sides. Provide minimum of 2 at base, 2 at wall, and 3 at tall cabinets.
   c. Exposed exterior backs to be high pressure plastic laminate balanced with high pressure cabinet liner.

6. Door and Drawer Fronts:

   a. Laminated door and drawer fronts to be 13/16 inch thick for all hinged and sliding doors. Drawer fronts and hinged doors are to overlay the cabinet body. Maintain a maximum 1/8 inch reveal between pairs of doors, between door and drawer front, or between multiple drawer fronts within the cabinet.
   b. Stile and Rail doors shall be 13/16 inch thick glazed with full ¼ inch glass. Available

hinged or sliding. All exposed lite-opening edges shall be trimmed and glazed with extruded vinyl glazing bead.

7. Drawers:

   a. Drawer fronts shall be applied to separate drawer body component sub-front.
   b. Drawer sides shall be dadoed and glued to receive front and back, machine squared and held under pressure while hot melt glued and pinned together.
   c. Drawer bottom to be housed into front, sides and back. Underside of drawer to receive continuous bead of hot melt adhesive at joint between bottom and back/sides/front for sealing and rigidity. Reinforce drawer bottoms with 1/2 inch by 4 inch front-to-back intermediate underbelly stiffeners, hot melt glued and fastened. One at 24 inch, two at 36 inch, four at 48 inch.
   d. Paper storage drawers fitted with full width hood at back.
   e. All drawers shall have roller guides as specified under Paragraph 2.1.E.3.

8. Vertical and Horizontal Dividers: One of the following as indicated by cabinet number:

   a. Natural hardboard 1/4 inch thick, smooth both faces. Secured in cabinet with molded plastic clips.
   b. Pressure Fused laminate 3/4 inch thickness. Secured in cabinet with molded plastic clips or dowels.

9. Door/Drawer Front Rail: Provide minimum 3/4 inch x 6 inch x full width cabinet body rails immediately behind all door/drawer and multiple drawer horizontal joints to maintain exact body dimensions, close off reveal, and be locator for lock strikes.

10. ADA-Americans with Disabilities Act Requirements: The following special requirements shall be met, where specifically indicated on architectural plans as "ADA", or by General Note. To be in compliance with Federal Register Volume 56, No. 144, Rules and Regulations:

    a. Countertop height: with or without cabinet below, not to exceed a height of 34 inches A.F.F., (Above Finished Floor), at a surface depth of 24 inches.
    b. Kneecap clearance: to be minimum 27 inches A.F.F., and 30 inches clear span width.
    c. 12 inch deep shelving, adjustable or fixed: not to exceed a range from 9 inches A.F.F. to 54 inches A.F.F.
    d. Wardrobe cabinets: Shall be furnished with rod/shelf adjustable to 48 - 72 inches A.F.F. at a maximum 21 inch shelf depth.
    e. Sink cabinet clearances: in addition to 10.a,b. above, upper kneecap frontal depth to be no less than 8 inches, and lower toe frontal depth to be no less than 11 inches, at a point 9 inches A.F.F., and as further described in Volume 56, Section 4.1.9.

B. Countertops:

1. Stainless Steel Countertop:

   a. Equipment herein specified, when constructed of more than one piece and/or sheet of metal, shall be continuously butt-welded, ground and polished smooth; field joints shall be as few as possible.

b. Welded parts shall be homogeneous, non-porous, and free from pits, cracks, imperfections or discolorations.
c. Welding shall be electric process, with joints ground and polished smooth.
d. The welding rods used shall be of the same composition as sheets of parts welded.
e. Counter tops and like items, unless otherwise specified, shall be 16 gauge, Type 304 No. 4 finish with Marine edges.
f. Tops shall be reinforced on bottom side with hat channels and coated with sound deadening material.
g. Field joints in tops shall be bolted where tops exceed length of available sheets and/or where building access does not permit the top to be brought into the building in one piece.
h. Backsplashes:

    i. Form on three sides of, and integral with, counter top of 14-gauge stainless steel with corners formed with a ¾” radius, both horizontal and vertical.
    ii. Provide ¾” return down backside.
    iii. Close ends of side splashes with ¾” radius.

i. Integral Sinks:

    i. Sinks shall be constructed of 14-gauge stainless steel with corners formed with a ¾” radius, both horizontal and vertical; sink sizes established on the drawings to be inside measurements.

        1) ADA Sink: 22”x19”, 5-1/2” depth.
        2) Single Bowl: 33”x19”, 8” depth.

    ii. Partitions between sink compartments shall be double walled with ¾” radius corners, ¾” radius top edges, welded in place, ground smooth and polished.
    iii. Fronts, bottoms and back of multiple compartment sinks shall be one piece with no overlapping joints or open crevices.
    iv. Bottom of each compartment shall be molded at drain opening at center.
    v. Where sinks occur in counter tops, they shall be entirely welded to the countertops with welds ground smooth and polished, with no trace of welding left, to give the appearance of one continuous piece.
    vi. Counter tops are to have a stainless steel backsplash 4” high.
    vii. Provide appropriate number of holes for specified faucets, drains, eyewash and solids inceptor.

C. Workmanship

1. All exposed exterior cabinet surfaces to be .030 inch high pressure laminate. Laminate surface/balancing liner to core under controlled conditions, by approved and regulated laminating methods to assure a premium lamination. Natural-setting hybrid P.V.A. Type III water resistant adhesives that cure through chemical reaction, containing no health or environmentally hazardous ingredients, are required. Methods requiring heat are not allowed; "contract" methods of laminating are not allowed.
2. Cabinet parts shall be accurately machined and bored for premium grade quality joinery construction utilizing automatic machinery to insure consistent sizing of modular

components. End panels shall be doweled to receive bottom and top.

3. Back panel shall be fully housed into, and recessed 7/8 inch from the back of cabinet sides, top, and bottom to insure rigidity and fully closed cabinet. Cabinet back shall be shimmed from rear of body for tight interior fit.
4. Drawer bottom shall be fully housed into and recessed 1/2 inch up from the bottom of sides, back and subfront. Sides of drawer shall be fully dadoed to receive drawer back, locked in fully to subfront, fastened with glue and mechanical fasteners.
5. 3/4 inch thick hang rails shall be glued to backside and mechanically fastened to end panels of all wall, base, and tall cabinets for extra rigidity and to facilitate installation.
6. Rear of cabinet back and underside of drawer bottom joints to receive a continuous bead of hot melt adhesive to add to unit body strength and develop moisture and vermin seal.
7. All cases shall be square, plumb, and true.
8. Case body and drawer workmanship and quality of construction shall be further evidenced by Independent Testing Laboratory results as described in 1.4.D.
9. Provide removable back panels and closure panels for plumbing access where shown on drawings.

D. Mobile Cabinet Design and Construction:

1. No conventional particleboard-to-particleboard fastening allowed as structural members. Low mobile cabinets shall be designed with a structurally layered base, to which plate-type casters are bolted.
2. No exposed fasteners.
3. Design profile shall be flush inset door and flush inset finished back, between end panels.
4. Unit top shall be 3 mm PVC with radiused corners, and overhand case front, back, and sides to function as a bumper system.

G. Instrument Storage Cabinets: Modular open in sizes as indicated on drawings. Compartment sizes and arrangements as shown on drawings, as manufactured by Case Systems. Manufacturers seeking approval must submit sample of instrument storage cabinet showing shelf system and construction details conforming to the requirements of this specification.

1. Cabinet Body: ¾ inch, 47 lb. Density, ANSI A208.1-1993 type M-3, particleboard core. Back panel 3/8 inch recessed and structurally grooved all four sides of cabinet body, set with hot melt adhesive and ¾ inch thick rear stiffeners. Interior body surfacing, whether open or closed door cabinet, including sides, rear, and shelf underbody, shall be standard laminate, BLACK, and shelf underbody, shall be high pressure laminate to match cabinet exterior.
2. Toe base to be separate and continuous platform of exterior grade plywood of front, back and intermediates for continuous support and moisture resistance.
3. Shelf System: Caseliner™" Shelf shall be melamine faced, charcoal grey and ¾" thick core particleboard. Shelf top shall have drainage grooves running from back to front with a radiused top front edge. Top surface of shelf and front shall be coated with a Polyurethane/Polyurea Elastomer coating to provide superior impact resistance and to allow top and front surface of shelf to be waterproof.
4. Edging: Cabinet Body Edging to be high-impact, color-thru 3 mm PVC, length beveled both sides. Door Edging to be high-impact, color-thru 3mm PVC, length beveled and corner radiused inside and outside. Edging must be hot melt applied, trimmed beveled, Radiused

and buffed by singular automatic machinery for consistency. No exceptions.

5. Doors: Refer to drawings and schedule for type, left and right swing, and location. All doors are to inset flush between cabinet/compartment end panels.

6. Workmanship: Premium standards of consistent reveals, bevels, and edge treatments. No exposed mechanical fasteners. Color choices at exterior exposed cabinet body end panels to be from manufacturer's full range of colors. Instrument Storage Cabinets shall be shipped factory pre-assembled, including doors.

H. Spray Booth: Air Master System (AMS)

1. Explosion Proof Spray Booth with Light and Blower. Provide spray booth with vanity base cabinets, 34 inches high. Upper booth enclosure shall be 47 ½" high constructed of 18 gauge steel with a corrosion proof finish. Provide two air filters 16" by 20" by 1" angled at the rear of the hood. Provide a cage light. Provide blower unit, 1,725 RPM, 100 LFW, 773 CFM ¾ static pressure, duct size 6 ½" by 10 ¾".

   a. Refer to drawings for model numbers and locations.
   b. Colors: As selected by Architect from manufacturer's full range.

I. Metal Casework: Greene Manufacturing, Inc. (GMI)

1. Work Benches constructed of 18-gauge steel and all welded construction. Provide stainless steel work surfaces shall be 1-1/2" thick, 16 -gauge stainless steel with plywood core.

   a. Refer to drawings for model numbers and locations.
   b. Colors: As selected by Architect from manufacturer's full range.

PART 3 – EXECUTION

3.1 COORDINATION

A. Coordinate work of this Section with related work of other Sections as necessary to obtain proper installation of all items.

B. Verify site dimensions of cabinet locations in building prior to fabrication.

3.2 INSTALLATION

A. Storage and Protection: Casework shall be protected in transit. Store under cover in a ventilated building not exposed to extreme temperature and humidity changes. Do not store or install casework in building until concrete, masonry, and drywall/plaster work is dry.

B. Workmen: Install casework under the supervision of the manufacturer's representative with factory-trained mechanics certified by manufacturer.

C. Workmanship

1. Erect casework straight, level and plumb and securely anchor in place. Scribe and closely fit to adjacent work. Cut and fit work around pipes, ducts, etc.
2. Install all items complete and adjust all moving parts to operate properly.
3. Leave surface clean and free from defects at time of final acceptance.

D. Guarantee: All materials shall be guaranteed for a period of 5 years from manufacturer's defects and workmanship.

E. Clean Up: Remove all cartons, debris, sawdust, scraps, etc., and leave spaces clean and all casework ready for Owner's use.

END OF SECTION 123216

SECTION 123627 - LIBRARY FURNITURE

PART 1 - GENERAL

1.1 RELATED DOCUMENTS

A. Drawings and general provisions of the Contract, including General and Supplementary Conditions and Division 1 Specification Sections, apply to this Section.

1.2 SUMMARY

. This Section includes the following:

1. Library Shelving.
2. Library Casegoods.

A. Related Requirements:

1. Division 6 Section "Interior Architectural Woodwork" for custom circulation desk.
2. Division 6 Section “Flush Wood Paneling” for cladding at circular niche seating millwork.
3. Division 10 Section “Specialty Building Products” for library tables and seating.
4. Division 12 Section “Educational Casework” for casework throughout the rest of the building.
5. Division 12 Section “Simulated Stone Fabrication” for solid-surface-material countertops and backsplashes.

1.3 PERFORMANCE REQUIREMENTS

A. Safety and Performance Characteristics for Seating: Provide seating in compliance with ANSI/BIFMA X5.4. Identify furniture with appropriate markings of applicable testing and inspecting agency.

1.4 SUBMITTALS

A. General: Submit each item in this Article according to the Conditions of the Contract and Division 1 Specification Sections.

B. Product data for each type of product specified.

C. Shop drawings detailing fabrication and installation of library furniture. Show types of equipment furniture will support, required service clearances, location of power and data outlets, and conditions requiring accessories. Indicate dimensions taken from field measurements.

1. Indicate anchorage type and location.

D. Samples in the form of manufacturer's color charts consisting of actual units or sections of units showing the full range of colors, textures, and patterns available for each type of unit indicated.

1. Include similar samples of grommets and accessories involving color selection.

E. Maintenance data for library furniture to include in the operation and maintenance manual specified in Division 1. Include the following:

1. Methods for maintaining library furniture and finishes.
2. Precautions for cleaning materials and methods that could be detrimental to finishes and performance.

1.5 QUALITY ASSURANCE

A. Fire-Test-Response Characteristics for Seating: Provide seating materials identical to those tested by UL or another testing and inspecting agency acceptable to authorities having jurisdiction. Identify furniture with appropriate markings of applicable testing and inspecting agency.

B. Electrical Component Standard: Provide components that comply with NFPA 70 "National Electrical Code" and that are listed and labeled by UL.

C. Installer Qualifications: Engage an experience installer who employs workers trained and approved by library furniture manufacturer to install manufacturer's product.

1. Preinstallation Conference: Conduct conference at Project site to comply with requirements of Division 1 Section "Project Meetings."
2. Reinstallation Conference: Conduct conference at Project site to comply with requirements of Division 1 Section "Project Meetings." Review methods and procedures related to library stack systems including, but not limited to the following:
3. Inspect and discuss condition of substrate and other preparatory work performed by other trades.

1.6 PROJECT CONDITIONS

A. Field Measurements: Where library furniture is fixed in place, verify existing dimensions by field measurements before fabrication and indicate measurements on Shop Drawings.

B. Space Enclosure and Environmental Limitations: Do not install library furniture until space is enclosed and weatherproof, wet-work in space is completed and nominally dry, work above ceilings is complete, and ambient temperature and humidity conditions are and will be continuously maintained at values near those indicated for final occupancy.

PART 2 - PRODUCTS

2.1 ACCEPTABLE MANUFACTURER

A. Manufactures: Subject to compliance with requirements, provide the following product:

1. Basis of Design:

a. Classic Wood Series by Brodart Collection by Toledo Furniture.

2. Approved Manufacturers:

a. KI
b. Media Technologies
c. Worden

2.2 MATERIALS

A. Lumber: All hardwood shall be free of imperfections. All woods used in construction of this equipment shall be selected from thoroughly air seasoned stock and kiln-dried lumber, free imperfections and kiln dried to have a moisture content, at time of fabrication, of between 5% to 7%. Glued up panels shall have surfaces faced and shall be uniform in color, using random widths not less than 1" or more than 4".

B. Wood Species: Exposed: All exposed hardwood except chairs or as indicated otherwise below, shall be “Northern Grown Hard Maple” selected for uniform grain and color. Unexposed: Shall be sound hardwoods.

C. Plywood: Shall be constructed with and odd number of plies to resist warpage. All inner plies shall be sound and cross banded. Face veneers shall be selected for uniformity of grain and color on one or both sides, as design of each item requires.

D. Lumber Core Plywood: Shall be 5-ply of best grade with tight joints and controlled strip width to minimize warpage. Lumber core table and carrel tops shall be 1 $^{3}/_{16}$" thick, 5-ply construction meeting American National Standards Institute, Inc. standards for "Clear Grade".

E. Center Core of Lumber Core Panel: Shall be constructed of wood strips 1" thick and not less than 2" nor more than 4" wide. Wood strips shall be the full length of the panel, with no butt end joints, and shall run the longest dimension of the panel. The wood strips shall be free of knots or other defects. All wood strips shall be glued together on all edges to form "tight joint" construction, creating a solid core panel. Panels shall be of solid poplar hardwood.

F. Cross Bands of Lumber Core Panel: Shall be minimum $^{1}/_{10}$" thick poplar, applied to the top and bottom of the center of the center core, with grain direction at a 90 degree angle to the face grain of the center core.

G. High Pressure Laminate: NEMA LD3, plastic laminate for wood surfaces shall be .050" thick balanced by a backer sheet not less than .020" on the reverse side to prevent warpage. Laminate shall be bonded to the core with hybond #80 contact cement under pressure.

2.3 WOOD FINISHING PROCEDURE

A. Finishing: Prior to the finish operation all furniture shall be hand sanded, cleaned and inspected for imperfections. The furniture shall be treated with pre-stain conditioner to promote surface penetration of special-formulated stains designed for maximum penetration and adhesion. Selected stain shall be applied on all visible surfaces in a uniform manner and allowed to dry.

Catalyzed conversion sealer shall then be applied, allowed to dry, and sanded. Furniture shall be inspected for imperfections prior to application of the top coat. A top coat of catalyzed conversion varnish shall then be applied.

B. Finish Performance Criteria: All products must conform to these tests and pass each.

DESCRIPTION	TEST METHOD
1. Shrinkage and Heat Resistance: Expose finished panel to 120° F @ 70% relative humidity for 24 hrs.\	ANSI A161.1, 1985 9.1
2. Hot and Cold Check Resistance: Expose finished panel to one hour @ 120° F for 20 cycles.	ANSI A161.1, 1985 9.2
3. Detergent and Water Resistance: Expose finished panel to -1% detergent solution for 24 hours.	ANSI A161.1, 1985 9.4
4. Stain Resistance: Expose finished panel to 25 household stains and chemicals.	ANSI 161.1, 1985 9.3 NEMA 11-14, 1985 3.9
5. Light Resistance: Expose finished panel to sun-lamp light for 36 hours.	C.D.G., Inc.
6. Adhesion: Evaluate finish by pushing, nickel (coin) against the test surface under pressure, and pushing along the surface.	C.D.G., Inc.
7. Abrasion Resistance: Expose finished panel to falling sand abrasion.	C.D.G., Inc.
8. Humidity Resistance: Expose finished panel to 100° F and 95% relative humidity for 72 hours.	C.D.G., Inc.
9. Print Test: Expose finished panel to print outlined in test for 24 hours	ASTM D209-67

2.4 FABRICATION/CONSTRUCTION - BOOKSHELVING

A. General: Type: Shelving construction shall be modular type, utilizing all natural hardwoods. No particleboard on synthetic materials will be permitted. Design: Shelving units shall be designed with the starter and adder concept.

B. End Panels: 13/16" thick, 3-ply 45# density particleboard core with select plain-sliced, slip-matched Hard Maple veneer on the inside and outside face. The vertical edges and top edge of the end panel have a 1.6 mm Hard Maple external edge band. All panel edges are eased. Exact height and depth of panel must be specified when ordering. End panels are not machined for fastening. No fastening hardware is provided with end panels.

C. Intermediate Upright: Shall be 1" thick, of solid Hard Maple hardwood glued up in flush panel design in heights and depths as scheduled. Random width boards, no more than 4" or less than 1" shall be used. Edges shall be square and eased. Shelf pin holes shall be bored on both sides of the panel and shall be staggered so that pins can be deeply seated without coinciding with the pin holes on the opposite side. Panels shall be drilled through at front and rear, top

and bottom, for attachment of tops and bases with $^5/_{16}$" - 18 x 6" hex head bolts, nuts and washers.

D. Cornice (Top) Unit: Cornice tops shall have a 2 $^1/_4$" fascia, $^3/_4$" thick, of solid Hard Maple banded to a 3/4" plywood panel of specified depth. The top front corner of the fascia shall have a 1/8" radius. On the inside of the surface of the top of each end, butted to the fascia, a solid hardwood bolting cleat 2 $^1/_4$" x 1 $^1/_4$" shall be bolted and glued and stapled. For additional strength, glue blocks shall be added at the intersection of the cleats and top panel as well as at the intersection of the fascia and top panel. Bolting cleats shall be drilled to allow assembly bolts to pass through.

E. Base: The base front shall be 4" high and $^1/_2$" thick solid Hard Maple. A 2" x $^3/_4$" rail shall be tenoned full length to the inside of the front. Bolting cleats 2 $^1/_4$" x 1 $^1/_4$" shall be glued and stapled perpendicular at the ends of the rail and shall be drilled to allow assembly bolts to pass through. A second full length rail shall be glued and stapled to the rear of the bolting cleats for support and proper alignment. Bases shall be made so that the base shelf rests on the bolting cleats and sets behind and flush with the top of the base front.

1. Mobile shelving Units: Shelving construction is the same as the standard shelving with the exception of the base. The base facing is 4-3/8”H, receives four reinforced 14 gauge corner brackets with four 2-1/3” heavy duty swivel casters attached to a 14 gauge caster bracket. Corner brackets are attached to the end panel and the base facing. The caster assembly is hidden within the base, giving the appearance of a standard unit. All mobile units shall receive partitions.

   a. All double-face shelving units shall be mobile.

F. Shelves: Shall be ¾” thick of solid glued-up hardwood. Each shelf will have a 2” nosing of solid northern grown Hard Maple. No plywood core shelves will be accepted. Adjustable shelves will be grooved 11/32” diameter half round on the underside to set firmly on the 1” long, 5/16” diameter shelf pins which are cadmium plated and threaded.

G. Attachments: Four bolts shall be used to attach each single faced base or top, except 16" deep single faced units, on which six bolts shall be used. Eight bolts shall be used to attach each double-faced base or top. All hardware shall be concealed from view after assembly. Each single face unit shall be supplied with a metal bracket, lead anchor and screws for fastening to wall. Double-faced ranges that do not have partitions will receive two steel sway bars 53" long and $^5/_{16}$" square. These attach to each end panel and the next intermediate panel with screws.

H. Backs and Partitions: Shall be $^1/_4$" furniture grade plywood Hard Maple veneered finished to match shelving. Backs shall be finished on one side and used with single shelving. Partitions shall be used with double-faced shelving and therefore finished on both sides.

2.5 FABRICATION/CONSTRUCTION - LIBRARY CASEGOODS

A. Wood Book Trucks (Book Truck Collection):

1. Description: Solid hardwood not less than 3/4" thick. Except when indicated, each truck is supplied with two fixed and two swivel carpet casters with 5" diameter tires. Each caster is attached with four lag screws, except as indicated.

2. Casters: Forks are steel, heat treated, and bright nickel plated. Wheels are gray rubber, 1-9/32"W on ball bearings. Seals and O-rings are used to produce a quiet caster. Load capacity rated at 200# per caster.

3. Double-Faced Display: Shelves are tenoned, glued and screwed into the ends. Top two shelves are 7-1/8" H x 5-3/4" D, double-faced and sloped. Bottom shelf is flat.

4. Depressible Book Receiving Truck: Construction is 3/4" edge-banded plywood in flush panel design. The depressible platform is plastic laminated and mounted on a spring mechanism, and has nylon rollers mounted into all four edges for ease of operation and stability. The truck is supplied with four heavy-duty 3" swivel casters mounted to solid hardwood caster blocks.

PART 3 - EXECUTION

3.1 PREPARATION

A. Obtain actual field dimensions affecting the work of this Section from the site.

B. Where dimensions are not available before starting fabrication confirm rough-in dimensions required.

C. Obtain mechanical and electrical service characteristics and rough-in locations from site.

D. Ensure that components, furniture, and equipment can be located in place of final installation without conflicting with work of other trades or job conditions.

3.2 INSTALLATION

A. Set library equipment and cabinetry plumb, square, and true, securely anchored to building structure.

B. Install items in accordance with manufacturer's instructions and shop drawings, by workmen skilled and familiar with library furnishing installation.

C. Scribe to walls and columns, shim level and rigid, use proper type anchoring devices for the materials encountered and the usage expected.

D. Cut, fit and patch as necessary, coordinating work with other trades.

3.3 FIELD QUALITY CONTROL

A. The manufacturer's representative shall visit the site before any work is shipped and during progress of the work to ensure the spaces are acceptable to receive the work of this Section and coordinated work has been executed.

B. At completion of installation, check the completed system and ensure components operate correctly.

3.4 ADJUSTING AND CLEANING

A. Clean, cabinetwork, counters, sinks and equipment.

B. Adjust doors, drawers, hardware, fixtures, and other moving parts, to operate smoothly and correctly.

3.5 SCHEDULE OF EQUIPMENT

A. Refer to Contract Drawings for elevations, catalog numbers and arrangement of Library equipment and furnishings.

END OF SECTION 123627

SECTION 123661 - SIMULATED STONE FABRICATIONS

PART 1 - GENERAL

1.1 RELATED DOCUMENTS

A. Drawings and general provisions of the Contract, including General and Supplementary Conditions and Division 01 Specification Sections, apply to this Section.

1.2 SUMMARY

A. Section Includes:

1. Solid-surface-material countertops and backsplashes.
2. Solid-surface-material window stools.
3. Solid-surface-material bench seat.

B. Related Requirements:

1. Division 6 Section “Interior Architectural Woodwork” for custom cabinets.
2. Division 7 Section “Joint Sealants” for sealants installed with solid surface materials.
3. Division 22 Section "Plumbing Fixtures" for non-integral sinks and plumbing fittings.

1.3 SUBMITTALS

A. Shop drawings: Indicate dimensions, component sizes, fabrication details, attachment, provisions and coordination requirements with adjacent work.

B. Product data: Indicate product description, fabrication information and compliance with specified performance requirements.

C. Maintenance data: Submit manufacturer’s care and maintenance data, including repair and cleaning instructions. Include in project close-out documents.

D. Samples: Contractor shall provide manufacturer’s color pdf images of solid-surface-material for review & approval. Actual samples are NOT required unless specifically requested by the architect/interior designer.

1.4 PROJECT CONDITIONS

A. Field Measurements: Verify dimensions of countertops by field measurements after base cabinets are installed but before countertop fabrication is complete.

1.5 COORDINATION

A. Coordinate locations of utilities that will penetrate countertops or backsplashes.

PART 2 - PRODUCTS

2.1 SOLID-SURFACE-MATERIAL FABRICATION

A. Configuration: Provide countertops with the following front and backsplash style:

1. Front: Straight, slightly eased at top and bottom.
2. Backsplash: Straight, slightly eased at top and edges.

B. Countertops: 1/2-inch- with front edge built up with same material.

1. Fabrication: Fabricate tops in one piece with shop-applied edges and backsplashes unless otherwise indicated. Comply with solid-surface-material manufacturer's written instructions for adhesives, sealers, fabrication, and finishing.

a. Fabricate with loose backsplashes for field assembly.
b. Install integral sink bowls in countertops in the shop.
c. Make cutouts to templates furnished by the manufacturer.
d. Reinforce edges and cutouts as recommended by the manufacturer.

2. Joints: Fabricate countertops in sections for joining in field, with joints at locations indicated.

a. Joint Locations: Not within 18 inches of a sink or cooktop and not where a countertop section less than 36 inches long would result, unless unavoidable.

C. Backsplashes: 1/2-inch thick, solid surface material.

D. Window Stools: 1/2-inch thick, solid surface material, adhesively joined with inconspicuous seams with built-up edge with slight radius. Refer to drawings for details.

E. Bench Seat: 1/2-inch thick, solid surface material, adhesively joined with inconspicuous seams with built-up edge with slight radius. Refer to drawings for details.

2.2 MATERIALS

A. Plywood: Exterior softwood plywood complying with DOC PS 1, Grade C-C Plugged, touch sanded.

B. Adhesives: Do not use adhesives that contain urea formaldehyde.

C. Adhesives: Adhesives shall comply with the testing and product requirements of the California Department of Health Services' "Standard Practice for the Testing of Volatile Organic Emissions from Various Sources Using Small-Scale Environmental Chambers."

D. Solid Surface Material: Homogeneous solid sheets of filled plastic resin complying with ANSI SS1.

1. Manufacturers: Subject to compliance with requirements, provide the following

a. Dupont, Corian Solid Surface.

2. Colors: As selected from Group 4.

PART 3 - EXECUTION

3.1 EXAMINATION

A. Examine substrates to receive solid surface material countertops and conditions under which countertops will be installed, with Installer present, for compliance with requirements for installation tolerances and other conditions affecting performance of countertops.

B. Proceed with installation only after unsatisfactory conditions have been corrected.

3.2 INSTALLATION

A. Install solid-surface-materials level to a tolerance of 1/8 inch in 8 feet.

B. Fasten countertops by screwing through corner blocks of base units into underside of countertop. Pre-drill holes for screws as recommended by manufacturer. Align adjacent surfaces and, using adhesive in color to match countertop, form seams to comply with manufacturer's written instructions. Carefully dress joints smooth, remove surface scratches, and clean entire surface. Refer to drawings for additional details.

1. Seal edges of cutouts in plywood subtops by saturating with varnish.

C. Complete cutouts not finished in shop. Mask areas of countertops adjacent to cutouts to prevent damage while cutting. Make cutouts to accurately fit items to be installed, and at right angles to finished surfaces unless beveling is required for clearance. Ease edges slightly to prevent snipping.

1. Seal edges of cutouts in particleboard subtops by saturating with varnish.

D. Apply sealant to gaps at walls; comply with Division 7 Section "Joint Sealants."

E. Install all solid-surface-materials to comply with manufacturer's written instructions for adhesives, sealers, fabrication, and finishing.

END OF SECTION 123661

SECTION 144200 - WHEELCHAIR LIFTS

PART 1 - GENERAL

1.1 RELATED DOCUMENTS

A. Drawings and general provisions of the Contract, including General and Supplementary Conditions and Division 01 Specification Sections, apply to this Section.

1.2 SUMMARY

A. Section includes unenclosed, self-contained vertical platform lifts.

B. Related Requirements:

1. Division 3 Section "Cast-in-Place Concrete" for setting sleeves, inserts, and anchoring devices in concrete.
2. Division 4 Section "Unit Masonry" for setting sleeves, inserts, and anchoring devices in masonry.
3. Division 26 Electrical Sections for powering platform lifts.

1.3 DEFINITIONS

A. Definitions in ASME A18.1 apply to Work of this Section.

1.4 ACTION SUBMITTALS

A. Product Data: For each type of product.

1. Include construction details, material descriptions, dimensions of individual components, and finishes for lifts.
2. Include rated capacities, operating characteristics, electrical characteristics, safety features, controls, finishes, and accessories.

B. Sustainable Design Submittals: Refer to Division 1 Section “LEED Requirements.”

C. Shop Drawings: For each lift.

1. Include plans, elevations, sections, details, attachments to other work, and required clearances.
2. Indicate dimensions, weights, loads, and points of load to building structure.
3. Include details of equipment assemblies, method of field assembly, components, and location and size of each field connection.
4. Include diagrams for power, signal, and control wiring.

D. Samples for Initial Selection: For surfaces and components with factory-applied color finishes.

1. Include Samples of integrally colored materials and accessories involving color selection.

1.5 INFORMATIONAL SUBMITTALS

A. Qualification Data: For manufacturer and Installer.

B. Product Certificates: For each type of lift.

1. Include statement that runway, ramp or pit, dimensions as shown on Drawings, and electrical service as shown and specified are adequate for lift being provided.

C. Sample Warranty: For special warranty.

1.6 CLOSEOUT SUBMITTALS

A. Operation and Maintenance Data: For each type of lift to include in operation and maintenance manuals.

1. In addition to items specified in Division 1 Section "Operation and Maintenance Data," include the following:

a. Parts list with sources indicated.
b. Recommended parts inventory list.

B. Inspection and Acceptance Certificates and Operating Permits: As required by authorities having jurisdiction for normal, unrestricted use of lifts.

C. Continuing Maintenance Proposal: Submit a continuing maintenance proposal from Installer to Owner, in the form of a standard one-year maintenance agreement, starting on date initial maintenance service is concluded. State services, obligations, conditions, and terms for agreement period and for future renewal options.

1.7 QUALITY ASSURANCE

A. Installer Qualifications: An authorized representative who is trained and approved by manufacturer.

1. Maintenance Proximity: Not more than two hours' normal travel time from Installer's place of business to Project site.

1.8 WARRANTY

A. Special Warranty: Manufacturer agrees to repair or replace components of lifts that fail in materials or workmanship within specified warranty period.

1. Warranty Period: Five years from date of Substantial Completion.

PART 2 - PRODUCTS

2.1 PERFORMANCE REQUIREMENTS

A. Accessibility Requirements: Comply with applicable provisions in the U.S. Architectural & Transportation Barriers Compliance Board's ADA-ABA Accessibility Guidelines and ICC A117.1.

B. Regulatory Requirements: Comply with ASME A18.1, "Safety Standard for Platform Lifts and Stairway Chairlifts."

2.2 VERTICAL PLATFORM LIFT

A. Vertical Platform Lift, General: Preengineered lift system.

1. Basis-of-Design Product: Subject to compliance with requirements, provide Inclinator Company of America “VL Wheelchair Lift” or comparable product by one of the following:

a. Bruno Independent Living Aids, Inc.
b. Butler Mobility Products.
c. Florlift of New Jersey, Inc.
d. Giant Lift Equipment Mfg. Co. Inc.
e. Liftavator, Inc.
f. Lift-U; Division of Hogan Mfg., Inc.
g. National Wheel-O-Vator Co., Inc. (The).
h. Savaria Corporation.
i. Garaventa Lift

B. Number of Stops: Two.

C. Platform Size: Approximately 33 by 48 inches, clear.

D. Door Operation and Clear Opening Width: Low-energy, power-operated doors that remain open for 20 seconds minimum; end door with minimum 32-inch clear opening width.

E. Rated Speed: 10 fpm.

F. Power Supply: 120 V, 60 Hz, one phase.

G. Emergency Operation: Provide manual operation and battery power system to raise or lower unit in case of malfunction or power loss.

H. Attendant Operation: Provide attendant call device at each landing, keyswitch-operated.

I. Self-Supporting Unit: Support vertical loads of unit only at base, with lateral support only at landing levels.

J. Runway Enclosure: Manufacturer's standard enclosure assembly.

1. Runway Enclosure: Rectangular steel-tube frame with flush steel-sheet panels.
2. Runway-Enclosure Doors: Rectangular steel-tube frame with flush steel-sheet panels.

K. Platform: Steel sheet or galvanized-steel sheet with manufacturer's standard nonskid surface texture.

L. Ramp: Fixed ramp matching platform to provide transition from floor to lift platform at bottom landing.

1. Ramp Size: End ramps a minimum of 32 inches wide; length as required for slope.
2. Ramp Slope: Maximum 1:12.
3. Ramp Finish: Finish ramps to match lift platform.

2.3 MATERIALS

A. Steel Plates, Shapes, and Bars: ASTM A 36.

B. Steel Tubing: ASTM A 500.

C. Steel Pipe: ASTM A 53; standard weight (Schedule 40) unless otherwise indicated or required by loads.

D. Steel Sheet: ASTM A 1008, cold-rolled commercial steel (CS) or ASTM A 101 hot-rolled, commercial steel (CS); as required for each use.

E. Galvanized-Steel Sheet: ASTM A 653, G90 zinc coating,

F. Galvanizing: Hot-dip galvanize items complying with the following:

1. ASTM A 123, for galvanizing steel and iron products.
2. ASTM A 153, for galvanizing steel and iron hardware.

G. Aluminum: Alloy and temper recommended by aluminum producer and finisher for type of use, corrosion resistance, and finish indicated; manufacturer's standard strengths and thicknesses for type of use.

1. Extruded Aluminum: ASTM B 221.
2. Aluminum Sheet and Plate: ASTM B 209.

H. Plastic Laminate Wood Grain Panels: Comply with requirements in Division 6 Section "Interior Architectural Woodwork" to match adjacent wall finishes.

I. Tempered Glass Panels: Comply with requirements in Division 8 Section "General Glazing."

J. Inserts: Furnish required concrete and masonry inserts and similar anchorage devices for installing structural members, guide rails, machines, and other lift components where installation of devices is specified in another Section.

K. Expansion Anchors: Anchor-bolt-and-sleeve assembly of material indicated below with capability to sustain a load equal to 10 times the load imposed as determined by testing according to ASTM E 488 conducted by a qualified independent testing agency.

1. Material: Carbon-steel components, zinc plated to comply with ASTM B 633, Class Fe/Zn 5.

L. Nonshrink, Nonmetallic Grout: Factory-packaged, nonstaining, noncorrosive, nongaseous grout complying with ASTM C 1107.

2.4 GENERAL FINISH REQUIREMENTS

A. Protect mechanical finishes on exposed surfaces from damage by applying a strippable, temporary protective covering before shipping.

B. Appearance of Finished Work: Noticeable variations in same piece are not acceptable. Variations in appearance of adjoining components are acceptable if they are within the range of approved Samples and are assembled or installed to minimize contrast.

2.5 FINISHES

A. Steel Factory Finish:

1. Powder-Coat Finish: After cleaning and pretreating, apply manufacturer's standard two-coat, baked-on finish consisting of prime coat and thermosetting topcoat to a minimum dry film thickness of 2 mils.
2. Color and Gloss: As selected by Architect from manufacturer's full range; provide custom RAL colors, where indicated.

B. Aluminum Finishes:

1. Baked-Enamel or Powder-Coat Finish: AAMA 2603 except with a minimum dry film thickness of 1.5 mils. Comply with coating manufacturer's written instructions for cleaning, conversion coating, and applying and baking finish.

a. Color and Gloss: As selected by Architect from manufacturer's full range; provide custom RAL colors, where indicated.

PART 3 - EXECUTION

3.1 EXAMINATION

A. Examine substrates, areas, and conditions, with Installer present, for compliance with requirements for installation tolerances, critical dimensions, and other conditions affecting performance of the Work.

B. Prepare written report, endorsed by Installer, listing conditions detrimental to performance.

C. Proceed with installation only after unsatisfactory conditions have been corrected.

3.2 INSTALLATION

A. General: Comply with ASME A18.1 and manufacturer's written instructions for installation of lifts unless otherwise indicated.

B. Wiring Method: Conceal conductors and cables within housings of units or building construction. Do not install conduit exposed to view in finished spaces. Bundle, lace, and train conductors to terminal points with no excess and without exceeding manufacturer's limitations on bending radii.

C. Coordinate runway doors with platform travel and positioning, for accurate alignment and minimum clearance between platforms, runway doors, sills, and door frames.

D. Position sills accurately and fill space under sills solidly with nonshrink, nonmetallic grout.

E. Coordinate platform doors with platform travel and positioning.

F. Adjust stops for accurate stopping and leveling at each landing, within required tolerances.

1. Leveling Tolerance: 1/4 inch up or down, regardless of load and direction of travel.

G. Prior to permanent fastening, adjust ramps to meet maximum allowable slope and change-in-elevation requirements, and to lie fully against landing surfaces.

H. Lubricate operating parts of lift, including drive mechanism, guide rails, hinges, safety devices, and hardware.

I. Test safety devices and verify smoothness of required protective enclosures and other surfaces.

3.3 FIELD QUALITY CONTROL

A. Acceptance Testing: On completion of lift installation and before permitting use of lifts, perform acceptance tests as required and recommended by ASME A18.1 and authorities having jurisdiction.

B. Operating Test: In addition to acceptance testing, load lifts to rated capacity and operate continuously for 30 minutes landings. Readjust stops, signal equipment, and other devices for accurate stopping and operation of system.

C. Advise Owner, Architect, Construction Manager and authorities having jurisdiction in advance of dates and times tests are to be performed on lifts.

3.4 MAINTENANCE SERVICE

A. Initial Maintenance Service: Beginning at Substantial Completion, maintenance service shall include 12 months' full maintenance by skilled employees of lift Installer. Include quarterly preventive maintenance, repair or replacement of worn or defective components, lubrication,

cleaning, and adjusting as required for proper lift operation. Parts and supplies shall be manufacturer's authorized replacement parts and supplies.

3.5 PROTECTION

A. Protect installed products until completion of the Project.

B. Touch-up, repair or replace damaged components prior to Substantial Completion.

C. Wheelchair lifts may not be used by Contractor for hoisting of materials, equipment or employees needed for other scope of work.

3.6 DEMONSTRATION

A. Engage a factory-authorized service representative to train Owner's maintenance personnel to adjust, operate, and maintain lifts. Include a review of emergency systems and emergency procedures to be followed at time of operational failure and other building emergencies.

B. Check operation of lifts with Owner's personnel present and before date of Substantial Completion. Determine that operating systems and devices are functioning properly.

C. Check operation of lifts with Owner's personnel present not more than one month before end of warranty period. Determine that operating systems and devices are functioning properly.

END OF SECTION 144200

SECTION 311000 - SITE CLEARING

PART 1 - GENERAL

1.1 RELATED DOCUMENTS

A. Drawings and general provisions of the Contract, including General and Supplementary Conditions and Division 01 Specification Sections, apply to this Section.

1.2 SUMMARY

A. Section Includes:

1. Protecting existing vegetation to remain.
2. Removing existing vegetation.
3. Clearing and grubbing.
4. Stripping and stockpiling topsoil.
5. Removing above- and below-grade site improvements.
6. Disconnecting, capping or sealing, and abandoning site utilities in place.
7. Temporary erosion and sedimentation control.

B. Related Requirements:

1. Section 015000 "Temporary Facilities and Controls" for temporary erosion- and sedimentation-control measures.
2. Section 013200 “Construction Progress Documentation” for project phasing, schedules, and miscellaneous associated information.

1.3 DEFINITIONS

A. Subsoil: Soil beneath the level of subgrade; soil beneath the topsoil layers of a naturally occurring soil profile, typified by less than 1 percent organic matter and few soil organisms.

B. Surface Soil: Soil that is present at the top layer of the existing soil profile. In undisturbed areas, surface soil is typically called "topsoil," but in disturbed areas such as urban environments, the surface soil can be subsoil.

C. Topsoil: Top layer of the soil profile consisting of existing native surface topsoil or existing in-place surface soil; the zone where plant roots grow. Its appearance is generally friable, pervious, and black or a darker shade of brown, gray, or red than underlying subsoil; reasonably free of subsoil, clay lumps, gravel, and other objects larger than 2 inches in diameter; and free of weeds, roots, toxic materials, or other nonsoil materials.

D. Plant-Protection Zone: Area surrounding individual trees, groups of trees, shrubs, or other vegetation to be protected during construction. Plant protection zones are assumed to be the any area within the drip line of existing trees and shrubs to remain.

E. Vegetation: Trees, shrubs, groundcovers, grass, and other plants.

1.4 PREINSTALLATION MEETINGS

A. Preinstallation Conference: Conduct conference at Project site.

1.5 MATERIAL OWNERSHIP

A. Except for materials indicated to be stockpiled offsite at owners' spoils site, salvaged to owner or otherwise remain Owner's property, cleared materials shall become Contractor's property and shall be removed from Project site.

1.6 INFORMATIONAL SUBMITTALS

A. Existing Conditions: Documentation of existing trees and plantings, adjoining construction, and site improvements that establishes preconstruction conditions that might be misconstrued as damage caused by site clearing.

1. Use sufficiently detailed photographs or video recordings.

B. Record Drawings: Identifying and accurately showing locations of capped utilities and other subsurface structural, electrical, and mechanical conditions.

1.7 FIELD CONDITIONS

A. Traffic: Minimize interference with adjoining roads, streets, walks, and other adjacent occupied or used facilities during site-clearing operations.

1. Do not close or obstruct streets, walks, or other adjacent occupied or used facilities without permission from Owner and authorities having jurisdiction.
2. Provide alternate routes around closed or obstructed trafficways if required by Owner or authorities having jurisdiction.

B. Salvageable Improvements: Carefully remove items indicated to be salvaged and store on Owner's premises.

C. Utility Locator Service: Notify PA One Call for area where Project is located before site clearing.

D. Do not commence site clearing operations until temporary erosion- and sedimentation-control and plant-protection measures are in place.

E. The following practices are prohibited within protection zones (protection zones are assumed to be at the limits of the drop line of any existing tree to remain, and any designated protection area on the plan):
   1. Storage of construction materials, debris, or excavated material.
   2. Parking vehicles or equipment.
   3. Erection of sheds or structures.
   4. Impoundment of water.
   5. Excavation or other digging unless otherwise indicated.
   6. Attachment of signs to or wrapping materials around trees or plants unless otherwise indicated.

F. Do not direct vehicle or equipment exhaust towards protection zones.

G. Prohibit heat sources, flames, ignition sources, and smoking within or near protection zones.

H. Soil Stripping, Handling, and Stockpiling: Perform only when the soil is dry or slightly moist.

PART 2 - PRODUCTS

2.1 MATERIALS

A. Satisfactory Soil Material: Requirements for satisfactory soil material are specified in Section 31 20 00 "Earth Moving."

   1. Obtain approved borrow soil material off-site when satisfactory soil material is not available on-site.

PART 3 - EXECUTION

3.1 PREPARATION

A. Protect and maintain benchmarks and survey control points from disturbance during construction.

B. Verify that trees, shrubs, and other vegetation to remain or to be relocated have been flagged and that protection zones have been identified in a manner approved by the Landscape Architect.

C. Protect existing site improvements to remain from damage during construction.

   1. Restore damaged improvements to their original condition, as acceptable to Owner.

3.2 TEMPORARY EROSION AND SEDIMENTATION CONTROL

A. Provide temporary erosion- and sedimentation-control measures to prevent soil erosion and discharge of soil-bearing water runoff or airborne dust to adjacent properties and walkways, according to erosion- and sedimentation-control Drawings and requirements of authorities having jurisdiction.

B. Verify that flows of water redirected from construction areas or generated by construction activity do not enter or cross protection zones.

C. Inspect, maintain, and repair erosion- and sedimentation-control measures during construction until permanent vegetation has been established.

D. Remove erosion and sedimentation controls, and restore and stabilize areas disturbed during removal.

3.3 TREE AND PLANT PROTECTION

A. Repair or replace trees, shrubs, and other vegetation indicated to remain or be relocated that are damaged by construction operations, in a manner approved by the Landscape Architect.

3.4 EXISTING UTILITIES

A. Owner will arrange for disconnecting and sealing indicated utilities that serve existing structures before site clearing, when requested by Contractor.

1. Verify that utilities have been disconnected and capped before proceeding with site clearing.

B. Locate, identify, disconnect, and seal or cap utilities indicated to be removed or abandoned in place.

1. Arrange with utility companies to shut off indicated utilities.
2. Owner will arrange to shut off indicated utilities when requested by Contractor.

C. Locate, identify, and disconnect utilities indicated to be abandoned in place.

D. Interrupting Existing Utilities: Do not interrupt utilities serving facilities occupied by Owner or others, unless permitted under the following conditions and then only after arranging to provide temporary utility services according to requirements indicated:

1. Notify Architect not less than two days in advance of proposed utility interruptions.
2. Do not proceed with utility interruptions without Architect's written permission.

E. Excavate for and remove underground utilities indicated to be removed.

F. Removal of underground utilities is included in earthwork sections; in applicable fire suppression, plumbing, HVAC, electrical, communications, electronic safety and security, and

utilities sections; and in Section 02 41 16 "Structure Demolition" and Section 02 41 19 "Selective Demolition."

3.5 CLEARING AND GRUBBING

A. Remove obstructions, trees, shrubs, and other vegetation to permit installation of new construction.

1. Do not remove trees, shrubs, and other vegetation indicated to remain or to be relocated.
2. Grind down stumps and remove roots, obstructions, and debris to a depth of 18 inches below exposed subgrade.
3. Use only hand methods for grubbing within protection zones.
4. Chip removed tree branches and stockpile in areas approved by Owner, Contractor is responsible for the legal disposal of all debris.

B. Fill depressions caused by clearing and grubbing operations with satisfactory soil material unless further excavation or earthwork is indicated.

1. Place fill material in horizontal layers not exceeding a loose depth of 8 inches, and compact each layer to a density equal to adjacent original ground.

3.6 TOPSOIL STRIPPING

A. Remove sod and grass before stripping topsoil.

B. Strip topsoil to a minimum depth of 6 inches or as identified in the geotechnical report in a manner to prevent intermingling with underlying subsoil or other waste materials.

1. Remove subsoil and nonsoil materials from topsoil, including clay lumps, gravel, and other objects larger than 2 inches in diameter; trash, debris, weeds, roots, and other waste materials.

C. Stockpile topsoil away from edge of excavations without intermixing with subsoil or other materials. Grade and shape stockpiles to drain surface water. Cover to prevent windblown dust and erosion by water.

1. Limit height of topsoil stockpiles to 35 feet.
2. Do not stockpile topsoil within protection zones.
3. Surplus topsoil shall become the property of the contractor. Surplus topsoil is that which exceeds quantity indicated to be stockpiled or reused.
4. Refer to Section 013200 “Construction Progress Documentation” for more information about offsite spoils locations.

3.7 SITE IMPROVEMENTS

A. Remove existing above- and below-grade improvements as indicated and necessary to facilitate new construction.

B. Remove slabs, paving, curbs, gutters, and aggregate base as indicated.

1. Unless existing full-depth joints coincide with line of demolition, neatly saw-cut along line of existing pavement to remain before removing adjacent existing pavement. Saw-cut faces vertically.
2. Paint cut ends of steel reinforcement in concrete to remain with two coats of antirust coating, following coating manufacturer's written instructions. Keep paint off surfaces that will remain exposed.

3.8 DISPOSAL OF SURPLUS AND WASTE MATERIALS

A. Remove surplus soil material, unsuitable topsoil, obstructions, demolished materials, and waste materials including trash and debris, and legally dispose of them off Owner's property.

B. Separate recyclable materials produced during site clearing from other nonrecyclable materials. Store or stockpile without intermixing with other materials, and transport them to recycling facilities. Do not interfere with other Project work.

END OF SECTION 31 10 00

SECTION 312000 - EARTH MOVING

PART 1 - GENERAL

1.1 RELATED DOCUMENTS

A. Drawings and general provisions of the Contract, including General and Supplementary Conditions and Division 01 Specification Sections, apply to this Section.

1.2 SUMMARY

A. Section Includes:

1. Excavating and filling for rough grading the Site.
2. Preparing subgrades for slabs-on-grade, walks, pavements, turf and grasses, and plants.
3. Excavating and backfilling for buildings and structures.
4. Subbase course for slab on grades.
5. Subbase course and base course for asphalt paving.
6. Subsurface drainage backfill for trenches.
7. Excavating and backfilling trenches for utilities and pits for buried utility structures.

B. Related Requirements:

1. Section 01 51 10 “Temporary Facilities and Controls” for temporary controls, utilities, and support facilities; also for temporary site fencing if not in another Section.
2. Section 31 10 00 "Site Clearing" for site stripping, grubbing, stripping and stockpiling topsoil, and removal of above- and below-grade improvements and utilities.
3. Section 31 50 00 "Excavation Support and Protection" for shoring, bracing, and sheet piling of excavations.
4. Section 31 23 19 “Dewatering” for lowering and disposing of groundwater during construction.
5. Section 32 92 00 "Turf and Grasses" for finish grading in turf and grass areas, including preparing and placing planting soil for turf areas.

1.3 DEFINITIONS

A. Backfill: Soil material or controlled low-strength material used to fill an excavation.

1. Initial Backfill: Backfill placed beside and over pipe in a trench, including haunches to support sides of pipe.
2. Final Backfill: Backfill placed over initial backfill to fill a trench.

B. Base Course: Aggregate layer placed between the subbase course and hot-mix asphalt paving.

C. Bedding Course: Aggregate layer placed over the excavated subgrade in a trench before laying pipe.

D. Borrow Soil: Satisfactory soil imported from off-site for use as fill or backfill. Any imported soil should meet the definition of Clean Fill according to the PA DEP Management of Fill Policy, 258-2182-773 prior to receiving it from the outside source(s).

E. Drainage Course: Aggregate layer supporting the slab-on-grade that also minimizes upward capillary flow of pore water.

F. Excavation: Removal of material encountered above subgrade elevations and to lines and dimensions indicated.

1. Authorized Additional Excavation: Excavation below subgrade elevations or beyond indicated lines and dimensions as directed by Professional. Authorized additional excavation and replacement material will be paid for according to Contract provisions for changes in the Work.
2. Bulk Excavation: Excavation more than 10 feet in width and more than 30 feet in length.
3. Unauthorized Excavation: Excavation below subgrade elevations or beyond indicated lines and dimensions without direction by Professional. Unauthorized excavation, as well as remedial work directed by Professional, shall be without additional compensation.

G. Fill: Soil materials used to raise existing grades.

H. Rock: Rock material in beds, ledges, unstratified masses, conglomerate deposits, and boulders of rock material that exceed 1 cu. yd. for bulk excavation or 3/4 cu. yd. for footing, trench, and pit excavation that cannot be removed by rock-excavating equipment equivalent to the following in size and performance ratings, without systematic drilling, ram hammering, ripping, or blasting, when permitted:

1. Equipment for Footing, Trench, and Pit Excavation: Late-model, track-mounted hydraulic excavator; equipped with a 42-inch-maximum-width, short-tip-radius rock bucket; rated at not less than 138-hp flywheel power with bucket-curling force of not less than 28,700 lbf and stick-crowd force of not less than 18,400 lbf with extra-long reach boom.
2. Equipment for Bulk Excavation: Late-model, track-mounted loader; rated at not less than 230-hp flywheel power and developing a minimum of 47,992-lbf breakout force with a general-purpose bare bucket; measured according to SAE J-732.

I. Structures: Buildings, footings, foundations, retaining walls, slabs, tanks, curbs, mechanical and electrical appurtenances, or other man-made stationary features constructed above or below the ground surface.

J. Subbase Course: Aggregate layer placed between the subgrade and base course for hot-mix asphalt pavement, or aggregate layer placed between the subgrade and a cement concrete pavement or a cement concrete or hot-mix asphalt walk.

K. Subgrade: Uppermost surface of an excavation or the top surface of a fill or backfill immediately below subbase, drainage fill, drainage course, or topsoil materials.

L. Utilities: On-site underground pipes, conduits, ducts, and cables as well as underground services within buildings.

1.4 PREINSTALLATION MEETINGS

A. Preinstallation Conference: Conduct pre-excavation conference at Project site. The General Contractor shall invite any and all representatives from the municipality and other authorities having jurisdiction as required. GC shall also invite the site contractor and any other prime contractor that may be performing any site excavation as part of their work.

1.5 SUBMITTALS

A. Material Test Reports: From a qualified testing agency indicating and interpreting test results for compliance of the following with requirements indicated:

1. Classification according to ASTM D 2487 of each on-site or borrow soil material proposed for fill and backfill.
2. Laboratory compaction curve according to ASTM D 698 for each on-site or borrow soil material proposed for fill and backfill.
3. Laboratory compaction curve according to ASTM D 1557 for each on-site or borrow soil material proposed for fill and backfill.

1.6 QUALITY ASSURANCE

A. Blasting is not permitted based on the proximity of the existing building(s) and the stadium grandstand.

B. Geotechnical Testing Agency Qualifications: Qualified according to ASTM E 329 and ASTM D 3740 for testing indicated.

C. PennDOT Publication 408 Specifications (latest Edition, as amended).

1.7 FIELD CONDITIONS

A. Traffic: Minimize interference with adjoining roads, streets, walks, and other adjacent occupied or used facilities during earth-moving operations.

1. Do not close or obstruct streets, walks, or other adjacent occupied or used facilities without permission from Owner and authorities having jurisdiction.
2. Provide alternate routes around closed or obstructed traffic ways if required by Owner or authorities having jurisdiction.

B. Utility Locator Service: Notify “PA One Call” for area where Project is located before beginning earth-moving operations.

C. Do not commence earth-moving operations until temporary site fencing and erosion- and sedimentation-control measures specified in Section 01 50 00 "Temporary Facilities and Controls" and Section 31 10 00 "Site Clearing" are in place.

D. Do not commence earth-moving operations until plant-protection measures identified on the drawings are in place.

E. The following practices are prohibited within protection zones:

1. Storage of construction materials, debris, or excavated material.
2. Parking vehicles or equipment.
3. Erection of sheds or structures.
4. Impoundment of water.
5. Excavation or other digging unless otherwise indicated.
6. Attachment of signs to or wrapping materials around trees or plants unless otherwise indicated.

F. Do not direct vehicle or equipment exhaust towards protection zones.

G. Prohibit heat sources, flames, ignition sources, and smoking within or near protection zones.

PART 2 - PRODUCTS

2.1 SOIL MATERIALS

A. General: Provide borrow soil materials when sufficient satisfactory soil materials are not available from excavations. Borrow soil materials should meet the following criteria:
1. Relatively free of debris, waste, frozen materials, vegetation, organics, ash cinders.
2. Homogeneous.
3. Having a plasticity index of less than 10.
4. Free of rock or gravel larger than 3 inches in any dimension.
5. Containing less than 30 percent by weight smaller than the No. 200 sieve (fine particulars).
6. Meeting the definition of Clean Fill according to PA DEP Management of Fill Policy, 258-2182-773.
7. Containing less than 0.5 percent sulfur.
8. Borrow soil materials should be reviewed by a representative of the Geotechnical Engineer of Record.

B. Satisfactory Soils: Soil Classification Groups GW, GP, GM, GC, SW, SP, SM, SC, ML and CL according to ASTM D 2487, or a combination of these groups; free of rock or gravel larger than 3 inches in any dimension, debris, waste, frozen materials, vegetation, and other deleterious matter.

C. Unsatisfactory Soils: Soil Classification Groups OL, CH, MH, OH, and PT according to ASTM D 2487, or a combination of these groups.

1. Unsatisfactory soils also include satisfactory soils not maintained within 2 percent of optimum moisture content at time of compaction. However, the earthwork contractor is obligated to dry the material prior to determining the material as unsatisfactory. The Geotechnical Engineering of Record should also be consulted prior to deeming the material as unsatisfactory.

D. Subbase Material: PennDOT No. 2A material, as defined by PennDOT Publication 408 (latest Edition, as amended).

E. Base Course: Naturally or artificially graded mixture of natural or crushed gravel, crushed stone, and natural or crushed sand; ASTM D 294/D 2940M 0; with at least 95 percent passing a 1-1/2-inch sieve and not more than 8 percent passing a No. 200 sieve.

F. Bedding Course: In accordance with PennDOT Publication 408 (latest Edition, as amended) for all drainage piping and structures, in accordance with utility providers for all other utility trenches and structures.

G. Drainage Course: Narrowly graded mixture of washed crushed stone or crushed or uncrushed gravel; ASTM D 448; coarse-aggregate grading Size 57; with 100 percent passing a 1-1/2-inch sieve and zero to 5 percent passing a No. 8 sieve.

H. Sand: ASTM C 33; fine aggregate.

2.2 GEOTEXTILES

A. Subsurface Drainage Geotextile (underdrains): In accordance with PennDOT Publication 408 (latest Edition, as amended), Section 212 for Class 1 Geotextile.

B. Subsurface Detention Basin Geotextile: Refer to Detail on drawings for required geotextiles.

C. Separation Geotextile: In accordance with PennDOT Publication 408 (latest Edition, as amended), Section 212 for Class 4 Geotextile.

2.3 ACCESSORIES

A. Warning Tape: Acid- and alkali-resistant, polyethylene film warning tape manufactured for marking and identifying underground utilities, 6 inches wide and 4 mils thick, continuously inscribed with a description of the utility; colored as follows:

1. Red: Electric.
2. Yellow: Gas, oil, steam, and dangerous materials.
3. Orange: Telephone and other communications.
4. Blue: Water systems.
5. Green: Sewer systems.

B. Detectable Warning Tape: Acid- and alkali-resistant, polyethylene film warning tape manufactured for marking and identifying underground utilities, a minimum of 6 inches wide

and 4 mils thick, continuously inscribed with a description of the utility, with metallic core encased in a protective jacket for corrosion protection, detectable by metal detector when tape is buried up to 30 inches deep; colored as follows:

1. Red: Electric.
2. Yellow: Gas, oil, steam, and dangerous materials.
3. Orange: Telephone and other communications.
4. Blue: Water systems.
5. Green: Sewer systems.

PART 3 - EXECUTION

3.1 PREPARATION

A. Protect structures, utilities, sidewalks, pavements, and other facilities from damage caused by settlement, lateral movement, undermining, washout, and other hazards created by earth-moving operations.

B. Protect and maintain erosion and sedimentation controls during earth-moving operations.

C. Protect subgrades and foundation soils from freezing temperatures and frost. Remove temporary protection before placing subsequent materials.

3.2 DEWATERING

A. Prevent surface water and groundwater from entering excavations, from ponding on prepared subgrades, and from flooding Project site and surrounding area.

B. Dewatering program shall be completed in a manner that will not impact adjacent structures.

C. Protect subgrades from softening, undermining, washout, and damage by rain or water accumulation.

1. Reroute surface water runoff away from excavated areas. Do not allow water to accumulate in excavations. Do not use excavated trenches as temporary drainage ditches.
2. Install a dewatering system to keep subgrades dry and convey ground water away from excavations. Maintain until dewatering is no longer required.

D. Dispose of water removed by dewatering in a manner that avoids endangering public health, property, and portions of work under construction or completed. Dispose of water and sediment in a manner that avoids inconvenience to others.

3.3 EXPLOSIVES

A. Explosives: Do not use explosives. Blasting is not permitted.

3.4 EXCAVATION, GENERAL

A. Unclassified Excavation: Excavate to design subgrade elevations (refer to structural drawings for the defined design subgrade associated with the building expansion), lines, and dimensions as required by the Contract Drawings, regardless of the character of surface and subsurface conditions encountered. No changes in the Contract Sum or the Contract Time will be authorized.

1. If excavated materials intended for fill and backfill include unsatisfactory soil materials and rock, replace with satisfactory soil materials.
2. Remove rock to lines and grades indicated to permit installation of permanent construction without exceeding the following dimensions:

    a. 24 inches outside of concrete forms other than at footings.
    b. 12 inches outside of concrete forms at footings.
    c. 6 inches outside of minimum required dimensions of concrete cast against grade.
    d. Outside dimensions of concrete walls indicated to be cast against rock without forms or exterior waterproofing treatments.
    e. 6 inches beneath bottom of concrete slabs-on-grade.
    f. 6 inches beneath pipe in trenches, and 24 inches wider than pipe.
    g. 12 inches beneath bottom of pavement subgrade.

3. Waste excavation includes removal and disposal of waste. Excavate waste to lines and elevations indicated to permit installation of permanent construction and in all areas where less than 24 inches exists between the waste and finished site grades without exceeding the following dimensions:

    a. 24 inches outside of roadway stabilization area and lined swales.

3.5 EXCAVATION FOR STRUCTURES

A. Excavate to indicated elevations and dimensions within a tolerance of plus or minus 1 inch. If applicable, extend excavations a sufficient distance from structures for placing and removing concrete formwork, for installing services and other construction, and for inspections.

1. Excavations for Footings and Foundations: Do not disturb bottom of excavation. Excavate by hand to final grade just before placing concrete reinforcement. Trim bottoms to required lines and grades to leave solid base to receive other work.

B. Excavations at Edges of Tree- and Plant-Protection Zones:

1. Excavate by hand or with an air spade to indicated lines, cross sections, elevations, and subgrades. If excavating by hand, use narrow-tine spading forks to comb soil and expose roots. Do not break, tear, or chop exposed roots. Do not use mechanical equipment that rips, tears, or pulls roots.

3.6 EXCAVATION FOR WALKS AND PAVEMENTS

A. Excavate surfaces under walks and pavements to indicated lines, cross sections, elevations, and subgrades.

3.7 EXCAVATION FOR UTILITY TRENCHES

A. Excavate trenches to indicated gradients, lines, depths, and elevations.

B. Excavation shall be in accordance with PennDOT Publication 408 for all storm sewer piping and in accordance with the requirements of the associated utility provider for all other utilities.

C. Excavate trenches to uniform widths to provide the following clearance on each side of pipe or conduit. Excavate trench walls vertically from trench bottom to 12 inches higher than top of pipe or conduit unless otherwise indicated.

   1. Clearance: as indicated.

D. Trench Bottoms: Excavate trenches to the bottom of proposed pipe bedding to allow for placement of bedding course. Hand-excavate deeper for bells of pipe.

3.8 SUBGRADE INSPECTION

A. Notify Professional when excavations have reached required subgrade.

B. If Professional determines that unsatisfactory soil is present, continue excavation and replace with compacted backfill or fill material as directed.

C. Proof-roll subgrade and undercut subgrade where required with a minimum 10-ton smooth, single drum roller to pass slowly over the surface at a speed of approximately 3 miles per hour to identify soft pockets and areas of excess yielding. Do not proof-roll wet or saturated subgrades.

   1. Completely proof-roll subgrade in one direction, repeating proof-rolling in direction perpendicular to first direction. Limit vehicle speed to 3 mph.
   2. Excavate soft spots, unsatisfactory soils, and areas of excessive pumping or rutting, as determined by Professional, and replace with compacted backfill or fill as directed.

D. Authorized additional excavation and replacement material will be paid for according to Contract provisions for changes in the Work.

E. Reconstruct subgrades damaged by freezing temperatures, frost, rain, accumulated water, or construction activities, as directed by Professional, without additional compensation.

3.9 UNAUTHORIZED EXCAVATION

A. Fill unauthorized excavation under utility pipe and construction other than footings and foundations as directed by Professional.

3.10 STORAGE OF SOIL MATERIALS

A. Stockpile borrow soil materials and excavated satisfactory soil materials without intermixing. Place, grade, and shape stockpiles to drain surface water. Cover to prevent windblown dust.

1. Stockpile soil materials away from edge of excavations. Do not store within drip line of remaining trees.

3.11 BACKFILL

A. Place and compact backfill in excavations promptly, but not before completing the following:

1. Construction below finish grade including, where applicable, subdrainage, dampproofing, waterproofing, and perimeter insulation.
2. Surveying locations of underground utilities for Record Documents.
3. Testing and inspecting underground utilities.
4. Removing concrete formwork.
5. Removing trash and debris.
6. Removing temporary shoring, bracing, and sheeting.
7. Installing permanent or temporary horizontal bracing on horizontally supported walls.

B. Place backfill on subgrades free of mud, frost, snow, or ice.

3.12 UTILITY TRENCH BACKFILL

A. Place backfill on subgrades free of mud, frost, snow, or ice.

B. Backfill shall be placed in accordance with PennDOT Publication 408 for all storm sewer piping and in accordance with the requirements of the associated utility provider for all other utilities.

C. Place and compact bedding course on trench bottoms and where indicated. Shape bedding course to provide continuous support for bells, joints, and barrels of pipes and for joints, fittings, and bodies of conduits.

D. Backfill voids with satisfactory soil while removing shoring and bracing.

E. Place and compact final backfill of satisfactory soil to final subgrade elevation.

F. Warning Tape: Install warning tape directly above utilities, 12 inches below finished grade, except 6 inches below subgrade under pavements and slabs.

3.13 SOIL FILL

A. Plow, scarify, bench, or break up sloped surfaces steeper than 1 vertical to 4 horizontal so fill material will bond with existing material.

B. Place and compact fill material in layers to required elevations as follows:

1. Under grass and planted areas, use satisfactory soil material.
2. Under walks and pavements, use satisfactory soil material.
3. Under steps and ramps, use satisfactory fill.
4. Under building slabs, use satisfactory fill.
5. Under footings and foundations, use satisfactory fill.

C. Place soil fill on subgrades free of mud, frost, snow, or ice.

3.14 SOIL MOISTURE CONTROL

A. Uniformly moisten or aerate subgrade and each subsequent fill or backfill soil layer before compaction to within 2 percent of optimum moisture content.

1. Do not place backfill or fill soil material on surfaces that are muddy, frozen, or contain frost or ice.
2. Remove and replace, or scarify and air dry, otherwise satisfactory soil material that exceeds optimum moisture content by 2 percent and is too wet to compact to specified dry unit weight.

3.15 COMPACTION OF SOIL BACKFILLS AND FILLS

A. Place backfill and fill soil materials in layers not more than 12 inches in loose depth for material compacted by heavy compaction equipment (minimum equivalency to that of a 10-ton, smooth, single drum roller) and not more than 4 inches in loose depth for material compacted by hand-operated tampers. A plate attachment to a backhoe or a vibratory plate tamper is not considered suitable compaction equipment.

B. Place backfill and fill soil materials evenly on all sides of structures to required elevations and uniformly along the full length of each structure.

C. Compact soil materials to not less than the following percentages of maximum dry unit weight according to ASTM D 698:

1. Under structures, building slabs, pavements, and within trenches in structural areas, compact each layer of backfill or fill soil material at 98 percent.
2. Under walkways, compact each layer of backfill or fill soil material at 98 percent.
3. Under turf or unpaved areas, compact each layer of backfill or fill soil material at 92 percent.
4. For utility trenches not in structural areas, compact each layer of initial and final backfill soil material at 95 percent.

3.16 GRADING

A. General: Uniformly grade areas to a smooth surface, free of irregular surface changes. Comply with compaction requirements and grade to cross sections, lines, and elevations indicated.

1. Provide a smooth transition between adjacent existing grades and new grades.
2. Cut out soft spots, fill low spots, and trim high spots to comply with required surface tolerances.

B. Site Rough Grading: Slope grades to direct water away from buildings and to prevent ponding. Finish subgrades to elevations required to achieve indicated finish elevations, within the following subgrade tolerances:

1. Turf or Unpaved Areas: Plus or minus 1 inch.
2. Walks: Plus or minus 1/4 inch.
3. Pavements: Plus or minus 1/4 inch.

C. Grading inside Building Lines: Finish subgrade to a tolerance of 1/2 inch when tested with a 10-foot straightedge.

3.17 SUBSURFACE DRAINAGE

A. Subsurface Drain: Place subsurface drainage geotextile around perimeter of subdrainage trench. Place a 6-inch course of filter material on subsurface drainage geotextile to support subdrainage pipe. Encase subdrainage pipe in a minimum of 12 inches of filter material, placed in compacted layers 6 inches thick, and wrap in subsurface drainage geotextile, overlapping sides and ends at least 6 inches.

3.18 SUBBASE UNDER PAVEMENTS AND WALKS

A. Place subbase on subgrades free of mud, frost, snow, or ice.

B. On prepared subgrade, place subbase under the pavements and walks in accordance with PennDOT Publication 408 (latest Edition, as amended).

C. In accordance with PennDOT Publication 408 (latest Edition, as amended).

3.19 FIELD QUALITY CONTROL

A. Testing Agency: Owner will engage a qualified geotechnical engineering testing agency to perform tests and inspections.

B. Allow testing agency to inspect and test subgrades and each fill or backfill layer. Proceed with subsequent earth moving only after test results for previously completed work comply with requirements.

C. Footing Subgrade: At footing subgrades, at least one test of each soil stratum will be performed to verify design bearing capacities. Subsequent verification and approval of other footing subgrades may be based on a visual comparison of subgrade with tested subgrade when approved by Professional.

D. Testing agency will test compaction of soils in place according to ASTM D 1556, ASTM D 2167, ASTM D 2937, and ASTM D 6938, as applicable. Tests will be performed at the following locations and frequencies:

1. Paved Areas: Refer to PennDOT Publication 408, Section 210 – subgrade.
2. Trench Backfill: At each compacted initial and final backfill layer, at least one test for every 150 feet or less of trench length but no fewer than two tests.
3. Building Slab Areas: At subgrade and at each compacted fill and backfill layer, at least one test for every 2000 sq. ft. or less of paved area or building slab, but in no case fewer than three tests
4. Foundation Wall Backfill: At each compacted backfill layer, at least one test for each 100 feet or less of wall length, but no fewer than two tests.

E. When testing agency reports that subgrades, fills, or backfills have not achieved degree of compaction specified, scarify and moisten or aerate, or remove and replace soil materials to depth required; recompact and retest until specified compaction is obtained.

3.20 PROTECTION

A. Protecting Graded Areas: Protect newly graded areas from traffic, freezing, and erosion. Keep free of trash and debris.

B. Repair and reestablish grades to specified tolerances where completed or partially completed surfaces become eroded, rutted, settled, or where they lose compaction due to subsequent construction operations or weather conditions.

1. Scarify or remove and replace soil material to depth as directed by Professional; reshape and recompact.

C. Where settling occurs before Project correction period elapses, remove finished surfacing, backfill with additional soil material, compact, and reconstruct surfacing.

1. Restore appearance, quality, and condition of finished surfacing to match adjacent work, and eliminate evidence of restoration to greatest extent possible.

3.21 DISPOSAL OF SURPLUS AND WASTE MATERIALS

A. Adjust erosion control measures as necessary to compensate for size and location of topsoil stockpile.
1. Remove waste materials, including unsatisfactory soil, trash, and debris, and legally dispose of them off Owner's property.

2. Any exported soil should meet the definition of Clean Fill according to the PA DEP Management of Fill Policy, 258-2182-773 prior to removing it from the site.

END OF SECTION 312000

SECTION 312319 - DEWATERING

PART 1 - GENERAL

1.1 SUMMARY

A. Section includes construction dewatering, if necessary.

1.2 PREINSTALLATION MEETINGS

A. Preinstallation Conference: Conduct conference at Project site.

1.3 FIELD CONDITIONS

A. Survey Work: Engage a qualified land surveyor or professional engineer to survey adjacent existing buildings, structures, and site improvements; establish exact elevations at fixed points to act as benchmarks. Clearly identify benchmarks and record existing elevations.

PART 2 - PRODUCTS

2.1 PERFORMANCE REQUIREMENTS

A. Dewatering Performance: Design, furnish, install, test, operate, monitor, and maintain dewatering system of sufficient scope, size, and capacity to control hydrostatic pressures and to lower, control, remove, and dispose of ground water and permit excavation and construction to proceed on dry, stable subgrades.

PART 3 - EXECUTION

3.1 PREPARATION

A. Provide temporary grading to facilitate dewatering and control of surface water.

B. Protect and maintain temporary erosion and sedimentation controls, which are shown on the drawings and referenced in Section 015000 "Temporary Facilities and Controls," and Section 31 10 00 "Site Clearing," during dewatering operations.

3.2 INSTALLATION

A. Install dewatering system utilizing wells, well points, or similar methods complete with pump equipment, standby power and pumps, filter material gradation, valves, appurtenances, water disposal, and surface-water controls.

1. Space well points or wells at intervals required to provide sufficient dewatering.
2. Use filters or other means to prevent pumping of fine sands or silts from the subsurface.

B. Place dewatering system into operation to lower water to specified levels before excavating below groundwater level.

C. Provide standby equipment on-site, installed and available for immediate operation, to maintain dewatering on continuous basis if any part of system becomes inadequate or fails.

D. Groundwater level should be maintained a minimum of 2 feet below the proposed subgrade elevations during structural fill placement, foundation construction, and concrete placement.

3.3 OPERATION

A. Operate system continuously until drains, sewers, and structures have been constructed and fill materials have been placed or until dewatering is no longer required.

B. Operate system to lower and control ground water to permit excavation, construction of structures, and placement of fill materials on dry subgrades. Drain water-bearing strata above and below bottom of foundations, drains, sewers, and other excavations.

1. Do not permit open-sump pumping that leads to loss of fines, soil piping, subgrade softening, and slope instability.
2. Reduce hydrostatic head in water-bearing strata below subgrade elevations of foundations, drains, sewers, and other excavations.
3. Maintain piezometric water level a minimum of 24 inches below bottom of excavation.

C. Remove dewatering system from Project site on completion of dewatering. Plug or fill well holes with sand or cut off and cap wells a minimum of 36 inches below overlying construction.

3.4 FIELD QUALITY CONTROL

A. Survey-Work Benchmarks: Resurvey benchmarks regularly during dewatering and maintain an accurate log of surveyed elevations for comparison with original elevations. Promptly notify Architect if changes in elevations occur or if cracks, sags, or other damage is evident in adjacent construction.

END OF SECTION 312319

SECTION 315000 - EXCAVATION SUPPORT AND PROTECTION

PART 1 - GENERAL

1.1 RELATED DOCUMENTS

A. Drawings and general provisions of the Contract, including General and Supplementary Conditions and Division 01 Specification Sections, apply to this Section.

1.2 SUMMARY

A. Section includes temporary excavation support and protection systems.

1.3 PREINSTALLATION MEETINGS

A. Preinstallation Conference: Conduct conference at Project site.

1.4 ACTION SUBMITTALS

A. Shop Drawings: For excavation support and protection system, prepared by or under the supervision of a qualified professional engineer.

B. Delegated-Design Submittal: For excavation support and protection systems, including analysis data signed and sealed by the qualified professional engineer responsible for their preparation.

1.5 INFORMATIONAL SUBMITTALS

A. Qualification Data: For the following:

1. Professional Engineer: Experience with providing delegated-design engineering services of the type indicated, including documentation that engineer is licensed in the state in which Project is located.

B. Contractor Calculations: For excavation support and protection system. Include analysis data signed and sealed by the qualified professional engineer responsible for their preparation.

C. Existing Conditions: Using photographs or video recordings, show existing conditions of adjacent construction and site improvements that might be misconstrued as damage caused by inadequate performance of excavation support and protection systems. Submit before Work begins.

1.6 CLOSEOUT SUBMITTALS

A. Record Drawings: Identify locations and depths of capped utilities, abandoned-in-place support and protection systems, and other subsurface structural, electrical, or mechanical conditions.

1.7 FIELD CONDITIONS

A. Interruption of Existing Utilities: Do not interrupt any utility-serving facilities occupied by Owner or others unless permitted under the following conditions and then only after arranging to provide temporary utility according to requirements indicated:

1. Notify Professional no fewer than two days in advance of proposed interruption of utility.
2. Do not proceed with interruption of utility without Professional's written permission.

B. Survey Work: Engage a qualified land surveyor or professional engineer to survey adjacent existing buildings, structures, and site improvements; establish exact elevations at fixed points to act as benchmarks. Clearly identify benchmarks and record existing elevations.

PART 2 - PRODUCTS

2.1 PERFORMANCE REQUIREMENTS

A. Delegated Design: Engage a qualified professional engineer, as defined in Section 014000 "Quality Requirements," to design excavation support and protection systems to resist all lateral loading and surcharge, including but not limited to, retained soil, groundwater pressure, adjacent building loads, adjacent traffic loads, construction traffic loads, material stockpile loads, and seismic loads, based on the following:

1. Compliance with OSHA Standards and interpretations, 29 CFR 1926, Subpart P.
2. Compliance with requirements of authorities having jurisdiction.
3. Compliance with utility company requirements.
4. Compliance with railroad requirements.

2.2 MATERIALS

A. Provide materials that are either new or in serviceable condition.

B. Structural Steel: ASTM A 36/A 36M, ASTM A 690/A 690M, or ASTM A 992/A 992M.

C. Wood Lagging: Lumber, mixed hardwood, nominal rough thickness of 3 inches.

D. Shotcrete: Comply with Section 033713 "Shotcrete" for shotcrete materials and mixes, reinforcement, and shotcrete application.

E. Cast-in-Place Concrete: ACI 301, of compressive strength required for application.

F. Reinforcing Bars: ASTM A 615/A 615M, Grade 60, deformed.

G. Tiebacks: Steel bars, ASTM A 722/A 722M.

H. Tiebacks: Steel strand, ASTM A 416/A 416M.

PART 3 - EXECUTION

3.1 INSTALLATION - GENERAL

A. Locate excavation support and protection systems clear of permanent construction, so that construction and finishing of other work is not impeded.

B. Install excavation support and protection systems to ensure minimum interference with roads, streets, walks, and other adjacent occupied and used facilities.

1. Do not close or obstruct streets, walks, or other adjacent occupied or used facilities without permission from Owner and authorities having jurisdiction.
2. Provide alternate routes around closed or obstructed traffic ways if required by authorities having jurisdiction.

C. Install excavation support and protection systems without damaging existing buildings, structures, and site improvements adjacent to excavation.

3.2 SOLDIER PILES AND LAGGING

A. Install steel soldier piles before starting excavation.

1. Extend soldier piles below excavation grade level to depths adequate to prevent lateral movement.
2. Space soldier piles at regular intervals not to exceed allowable flexural strength of wood lagging.
3. Accurately align exposed faces of flanges to vary not more than 2 inches from a horizontal line and not more than 1:120 out of vertical alignment.

B. Install wood lagging within flanges of soldier piles as excavation proceeds.

1. Trim excavation as required to install lagging.
2. Fill voids behind lagging with soil, and compact.

C. Install wales horizontally at locations indicated on Drawings and secure to soldier piles.

3.3 TIEBACKS

A. Drill, install, grout, and tension tiebacks.

B. Test load-carrying capacity of each tieback, and replace and retest deficient tiebacks.

1. Have test loading observed by a qualified professional engineer responsible for design of excavation support and protection system.

C. Maintain tiebacks in place until permanent construction is able to withstand lateral earth and hydrostatic pressures.

3.4 BRACING

A. Locate bracing to clear columns, floor framing construction, and other permanent work. If necessary to move brace, install new bracing before removing original brace.

1. Do not place bracing where it will be cast into or included in permanent concrete work unless otherwise approved by Professional.
2. Install internal bracing if required to prevent spreading or distortion of braced frames.
3. Maintain bracing until structural elements are supported by other bracing or until permanent construction is able to withstand lateral earth and hydrostatic pressures.

3.5 MAINTENANCE

A. Monitor and maintain excavation support and protection system.

B. Prevent surface water from entering excavations by grading, dikes, or other means.

C. Continuously monitor vibrations, settlements, and movements to ensure stability of excavations and constructed slopes and to ensure that damage to permanent structures is prevented.

3.6 REMOVAL AND REPAIRS

A. Remove excavation support and protection systems when construction has progressed sufficiently to support excavation and earth and hydrostatic pressures.

1. Remove in stages to avoid disturbing underlying soils and rock or damaging structures, pavements, facilities, and utilities.
2. Remove excavation support and protection systems to a minimum depth of 48 inches below overlying construction, and abandon remainder.
3. Fill voids immediately with approved backfill compacted to density specified in Section 312000 "Earth Moving."
4. Repair or replace, as approved by Professional, adjacent work damaged or displaced by removing excavation support and protection systems.

END OF SECTION 315000

SECTION 321216 - ASPHALT PAVING

PART 1 - GENERAL

1.1 SUMMARY

A. Section Includes:
   1. Hot-mix asphalt patching.
   2. Hot-mix asphalt paving.
   3. Hot-mix asphalt overlay.

B. Related Requirements:

   1. Section 312000 "Earth Moving" for subgrade preparation, fill material, separation geotextiles, unbound-aggregate subbase and base courses, and aggregate pavement shoulders.
   2. Section 321373 "Concrete Paving Joint Sealants" for joint sealants and fillers at pavement terminations.

1.2 PREINSTALLATION MEETINGS

A. Preinstallation Conference: Conduct conference at Project site.

1.3 ACTION SUBMITTALS

A. Product Data: For each type of product.

1.4 INFORMATIONAL SUBMITTALS

A. Material Certificates: For each paving material. Include statement that mixes containing recycled materials will perform equal to mixes produced from all new materials.

1.5 QUALITY ASSURANCE

A. Manufacturer Qualifications: A paving-mix manufacturer registered with and approved by PennDOT.

B. Regulatory Requirements: Comply with materials, workmanship, and other applicable requirements of PennDOT for asphalt paving work.

PART 2 - PRODUCTS

2.1 AGGREGATES

A. Aggregate shall be provided in accordance with the specifications set forth in PennDOT Publication 408 (latest Edition, as amended).

2.2 ASPHALT MATERIALS

A. Asphalt materials shall be provided in accordance with the specifications set forth in PennDOT Publication 408 (latest Edition, as amended).

2.3 AUXILIARY MATERIALS

A. General: The following auxiliary materials shall be provided in accordance with specifications set forth in PennDOT Publication 408 (latest Edition, as amended):
   1. Joint Sealant
   2. Pavement Marking Paint.
   3. Thermoplastic Pavement Markings

2.4 MIXES

A. General: Hot-mix asphalt shall be provided in accordance with the specifications set forth in PennDOT Publication 408 (latest Edition, as amended). Payment is in accordance with terms of contract. There is no asphalt escalator associated with this project.

PART 3 - EXECUTION

3.1 PREPARATION

A. Proof-roll subgrade below pavements with heavy pneumatic-tired equipment to identify soft pockets and areas of excess yielding. Do not proof-roll wet or saturated subgrades. Proof-roll subgrade and undercut subgrade where required with a minimum 10-ton smooth, single drum roller to pass slowly over the surface at a speed of approximately 3 miles per hour to identify soft pockets and areas of excess yielding. Do not proof-roll wet or saturated subgrades.

   1. Completely proof-roll subgrade in one direction, repeating proof-rolling in direction perpendicular to first direction. Limit vehicle speed to 3 mph.
   2. Excavate soft spots, unsatisfactory soils, and areas of excessive pumping or rutting, as determined by Professional, and replace with compacted backfill or fill as directed.

3.2 PATCHING

A. Asphalt Pavement: Saw cut perimeter of patch and excavate existing pavement section to sound base. Excavate rectangular or trapezoidal patches, extending 12 inches into perimeter of adjacent sound pavement, unless otherwise indicated. Cut excavation faces vertically. Remove excavated material. Recompact existing unbound-aggregate base course to form new subgrade.

B. Tack Coat: Apply uniformly to vertical surfaces abutting or projecting into new, hot-mix asphalt paving at a rate of 0.05 to 0.15 gal/sq. yd.
   1. Allow tack coat to cure undisturbed before applying hot-mix asphalt paving.
   2. Avoid smearing or staining adjoining surfaces, appurtenances, and surroundings. Remove spillages and clean affected surfaces.

C. Placing Patch Material: Fill excavated pavement areas with hot-mix asphalt base mix for full thickness of patch and, while still hot, compact flush with adjacent surface.

3.3 SURFACE PREPARATION

A. Immediately before placing asphalt materials, remove loose and deleterious material from substrate surfaces. Ensure that prepared subgrade is ready to receive paving.

B. Tack Coat: Apply uniformly to surfaces of existing pavement in accordance with the specifications set forth in PennDOT Publication 408 (latest addition, as amended).

3.4 PLACING HOT-MIX ASPHALT

A. Machine place hot-mix asphalt on prepared surface in accordance with the specifications set forth in PennDOT Publication 408 (latest Edition, as amended).

3.5 JOINTS

A. Construct joints in accordance with the specifications set forth in PennDOT Publication 408 (latest Edition, as amended).

B. Seal all joints around inlets, manholes, curblines, and any other existing concrete structures which abut the new pavement.

3.6 COMPACTION

A. General: Compaction and rolling shall be performed in accordance with the specifications set forth in PennDOT Publication 408 (latest Edition, as amended).

B. Protection: After final rolling, do not permit vehicular traffic on pavement until it has cooled and hardened.

C. Erect barricades to protect paving from traffic until mixture has cooled enough not to become marked.

3.7 INSTALLATION TOLERANCES

A. Pavement Thickness: Compact each course to produce the thickness indicated within the tolerances outlined in PennDOT Publication 408 (latest Edition, as amended).

B. Pavement Surface Smoothness: Compact each course to produce a surface smoothness within the tolerances outlined in PennDOT Publication 408 (latest Edition, as amended).

3.8 PAVEMENT MARKING

A. Do not apply pavement-marking paint until layout, colors, and placement have been verified with Professional.

B. General: Apply pavement-marking paint pavement markings in accordance with the specifications set forth in PennDOT Publication 408 (latest Edition, as amended).

3.9 FIELD QUALITY CONTROL

A. Testing Agency: Owner will engage a qualified testing agency to perform tests and inspections.

B. Testing: Testing shall be performed in accordance with the specifications set forth in PennDOT Publication 408 (latest Edition, as amended) using the Nuclear, Moisture-Density Gauge method.

C. Replace and compact hot-mix asphalt where core tests were taken.

D. Remove and replace or install additional hot-mix asphalt where test results or measurements indicate that it does not comply with specified requirements.

3.10 WASTE HANDLING

A. Except for material indicated to be recycled, remove excavated materials from Project site and legally dispose of them in an EPA-approved landfill.

1. Do not allow milled materials to accumulate on-site.

END OF SECTION 321216

SECTION 321313 – CEMENT CONCRETE AND CONCRETE PAVING

PART 1 - GENERAL

1.1 RELATED DOCUMENTS

A. Drawings and general provisions of the Contract, including General and Supplementary Conditions and Division 01 Specification Sections, apply to this Section.

1.2 SUMMARY

A. This Section includes exterior cement concrete pavement for the following:

1. Concrete Paving (Walks & Pads)
2. Concrete Curb

B. Related Sections include the following:

1. Division 31 Section "Earth Moving" for subgrade preparation, grading, and subbase course.
2. Division 32 Section "Concrete Pavement Joint Sealants" for joint sealants of joints in concrete pavement and at isolation joints of concrete pavement with adjacent construction.

1.3 DEFINITIONS

A. Cementitious Materials: Portland cement alone or in combination with one or more of blended hydraulic cement, fly ash and other pozzolans, and ground granulated blast-furnace slag.

1.4 SUBMITTALS

A. Product Data: For each type of manufactured material and product indicated.

B. Design Mixtures: For each concrete pavement mixture. Include alternate mixture designs when characteristics of materials, Project conditions, weather, test results, or other circumstances warrant adjustments.

C. Qualification Data: For manufacturer.

D. Material Test Reports: From a qualified testing agency indicating and interpreting test results for compliance of the following with requirements indicated, based on comprehensive testing of current materials:

1. Aggregates. Include service record data indicating absence of deleterious expansion of concrete due to alkali-aggregate reactivity.

E. Material Certificates: Signed by manufacturers certifying that each of the following materials complies with requirements:

1. Cementitious materials.
2. Steel reinforcement and reinforcement accessories.
3. Fiber reinforcement.
4. Admixtures.
5. Curing compounds.
6. Applied finish materials.
7. Bonding agent or epoxy adhesive.
8. Joint fillers.

F. Field quality-control test reports.

1.5 QUALITY ASSURANCE

A. Manufacturer Qualifications: Manufacturer of ready-mixed concrete products who complies with ASTM C 94/C 94M requirements for production facilities and equipment.

1. Manufacturer certified according to NRMCA's "Certification of Ready Mixed Concrete Production Facilities."

B. Testing Agency: The Owner will engage a qualified testing and inspecting agency to perform field tests and inspections and prepare test reports.

C. ACI Publications: Comply with ACI 301, "Specification for Structural Concrete," unless modified by requirements in the Contract Documents.

D. Concrete Testing Service: Engage a qualified independent testing agency to perform material evaluation tests.

E. Preinstallation Conference: Conduct conference at Project site to comply with requirements in Division 1 Section "Project Management and Coordination."

1. Before submitting design mixtures, review concrete pavement mixture design and examine procedures for ensuring quality of concrete materials and concrete pavement construction practices. Require representatives, including the following, of each entity directly concerned with concrete pavement, to attend conference:

a. Contractor's superintendent.
b. Independent testing agency responsible for concrete design mixtures.
c. Ready-mix concrete producer.
d. Concrete pavement subcontractor.

1.6 PROJECT CONDITIONS

A. Traffic Control: Maintain access for vehicular and pedestrian traffic as required for other construction activities.

PART 2 - PRODUCTS

2.1 CURB

A. Curbing construction products shall meet the requirements of PENNDOT Publication 408 (latest Edition), Section 630, “Plain Cement Concrete Curb”, as amended.

2.2 CONCRETE PAVING / SIDEWALK

A. Concrete Paving construction products shall meet the requirements of PENNDOT Publication 408 (latest Edition), Section 676, “Cement Concrete Sidewalks”, as amended.

PART 3 - EXECUTION

3.1 EXAMINATION

A. Examine exposed subgrades and subbase surfaces for compliance with requirements for dimensional, grading, and elevation tolerances.

3.2 PREPARATION

A. Remove loose material from compacted subbase surface immediately before placing concrete.

3.3 CONCRETE PLACEMENT, FINISHING, PROTECTION, CURING

A. Sidewalks shall be constructed in accordance with PENNDOT Publication 408 (latest Edition), Section 676, “Cement Concrete Sidewalks”, as amended, and in addition to the details on the drawings.

B. Concrete curb construction shall meet the requirements of PENNDOT Publication 408 (latest Edition), Section 630, “Plain Cement Concrete Curb”, as amended.

C. <u>All joints shall be hand tooled.</u>

3.4 PAVEMENT TOLERANCES

A. Comply with tolerances of ACI 117 and as follows:

1. Elevation: 1/8 inch.
2. Thickness: Plus 3/8 inch, minus 1/4 inch.
3. Surface: Gap below 10-foot- long, unleveled straightedge not to exceed 1/4 inch.
4. Joint Spacing: 3 inches.
5. Contraction Joint Depth: Plus 1/4 inch, no minus.
6. Joint Width: Plus 1/8 inch, no minus.

3.5 FIELD QUALITY CONTROL

A. Testing Agency: The Owner will engage a qualified testing and inspecting agency to perform field tests and inspections and prepare test reports.

B. Testing Services: Testing of composite samples of fresh concrete obtained according to ASTM C 172 shall be performed according to the following requirements:

1. Testing Frequency: Obtain at least 1 composite sample for each 100 cubic yard or fraction thereof of each concrete mix placed each day.

    a. When frequency of testing will provide fewer than five compressive-strength tests for each concrete mixture, testing shall be conducted from at least five randomly selected batches or from each batch if fewer than five are used.

2. Slump: ASTM C 143/C 143M; one test at point of placement for each composite sample, but not less than one test for each day's pour of each concrete mix. Perform additional tests when concrete consistency appears to change.
3. Air Content: ASTM C 231, pressure method; one test for each composite sample, but not less than one test for each day's pour of each concrete mix.
4. Concrete Temperature: ASTM C 1064; one test hourly when air temperature is 40 deg F and below and when 80 deg F and above, and one test for each composite sample.
5. Compression Test Specimens: ASTM C 31/C 31M; cast and laboratory cure one set of three standard cylinder specimens for each composite sample.
6. Compressive-Strength Tests: ASTM C 39/C 39M; test 1 specimen at 7 days and 2 specimens at 28 days.

    a. A compressive-strength test shall be the average compressive strength from 2 specimens obtained from same composite sample and tested at 28 days.

C. Strength of each concrete mix will be satisfactory if average of any 3 consecutive compressive-strength tests equals or exceeds specified compressive strength and no compressive-strength test value falls below specified compressive strength by more than 500 psi.

D. Test results shall be reported in writing to Professional, concrete manufacturer, and Contractor within 48 hours of testing. Reports of compressive-strength tests shall contain Project identification name and number, date of concrete placement, name of concrete testing and inspecting agency, location of concrete batch in Work, design compressive strength at 28 days, concrete mixture proportions and materials, compressive breaking strength, and type of break for both 7- and 28-day tests.

E. Nondestructive Testing: Impact hammer, sonoscope, or other nondestructive device may be permitted by Professional but will not be used as sole basis for approval or rejection of concrete.

F. Additional Tests: Testing and inspecting agency shall make additional tests of concrete when test results indicate that slump, air entrainment, compressive strengths, or other requirements have not been met, as directed by Professional.

G. Remove and replace concrete where test results indicate that it does not comply with specified requirements.

H. Additional testing and inspecting, at Contractor's expense, will be performed to determine compliance of replaced or additional work with specified requirements.

I. Prepare test and inspection reports.

3.6 REPAIRS AND PROTECTION

A. Remove and replace concrete that is broken, damaged, or defective or that does not comply with requirements in this Section.

B. Drill test cores, where directed by Professional, when necessary to determine magnitude of cracks or defective areas. Fill drilled core holes in satisfactory pavement areas with Portland cement concrete bonded to pavement with epoxy adhesive.

C. Protect concrete from damage. Exclude traffic from pavement for at least 14 days after placement. When construction traffic is permitted, maintain pavement as clean as possible by removing surface stains and spillage of materials as they occur.

D. Maintain concrete pavement free of stains, discoloration, dirt, and other foreign material. Sweep concrete pavement not more than two days before date scheduled for Substantial Completion inspections.

END OF SECTION 321313

SECTION 321373 - CONCRETE PAVING JOINT SEALANTS

PART 1 - GENERAL

1.1 RELATED DOCUMENTS

A. Drawings and general provisions of the Contract, including General and Supplementary Conditions and Division 01 Specification Sections, apply to this Section.

1.2 SUMMARY

A. Section Includes:
   1. Expansion and contraction joints within cement concrete pavement and concrete sidewalks.
   2. Joints between cement concrete and asphalt pavement.

B. Related Requirements:
   1. Division 32 Section “Asphalt Paving” for constructing joints between concrete and asphalt pavement.
   2. Division 32 Section "Concrete Paving” for constructing joints in concrete.

1.3 SUBMITTALS

A. Product Data: For each type of product.

B. Samples for Verification: For each kind and color of joint sealant required, provide Samples with joint sealants in 1/2-inch- (13-mm) wide joints formed between two 6-inch (150-mm) long strips of material matching the appearance of exposed surfaces adjacent to joint sealants.

C. Paving-Joint-Sealant Schedule: Include the following information:
   1. Joint-sealant application, joint location, and designation.
   2. Joint-sealant manufacturer and product name.
   3. Joint-sealant formulation.
   4. Joint-sealant color.

D. Qualification Data: For installer. Retain “Product Certificates” Paragraph below to require submittal of product certificates from manufacturers.

E. Product Certificates: For each type of joint sealant and accessory.

1.4 QUALITY ASSURANCE

A. Installer Qualifications: An entity that employs installers and supervisors who are trained and approved by manufacturer.

B. Source Limitations: Obtain each type of joint sealant through one source from a single manufacturer.

C. Preconstruction Compatibility and Adhesion Testing: Submit to joint-sealant manufacturers, for testing indicated below, samples of materials that will contact or affect joint sealants.
   1. Use manufacturer's standard test methods to determine whether priming and other specific joint preparation techniques are required to obtain rapid, optimum adhesion of joint sealants to joint substrates.
   2. Submit not fewer than eight pieces of each type of material, including joint substrates, shims, joint-sealant backings, secondary seals, and miscellaneous materials.
   3. Schedule sufficient time for testing and analyzing results to prevent delaying the Work.
   4. For materials failing tests, obtain joint-sealant manufacturer's written instructions for corrective measures including use of specially formulated primers.
   5. Testing will not be required if joint-sealant manufacturers submit joint preparation data that are based on previous testing of current sealant products for adhesion to, and compatibility with, joint substrates and other materials matching those.

D. Product Testing: Obtain test results for "Product Test Reports" Paragraph in "Submittals" Article from a qualified testing agency based on testing of current sealant products within a 36-month period preceding the Notice to Proceed with the Work.

   1. Testing Agency Qualifications: An independent testing agency qualified. According to ASTM C 1021 for testing indicated, as documented according to ASTM E 548

PART 2 - PRODUCTS

2.1 MANUFACTURERS

A. Available Products: Subject to compliance with requirements, products that may be incorporated into the Work include, but are not limited to, products listed in other Part 2 sections.

2.2 MATERIALS, GENERAL

A. Compatibility: Provide joint sealants, backing materials, and other related materials that are compatible with one another and with joint substrates under conditions of service and application, as demonstrated by joint-sealant manufacturer, based on testing and field experience.

2.3 COLD-APPLIED JOINT SEALANTS

A. General: Cold-applied joint sealants shall be provided in accordance with the specifications set forth in PENNDOT Publication 408 (latest Edition), as amended.

2.4 HOT-APPLIED JOINT SEALANTS

A. General: Hot-applied joint sealants shall be provided in accordance with the specifications set forth in PENNDOT Publication 408 (latest Edition), as amended.

2.5 JOINT-SEALANT BACKER MATERIALS

A. General: Provide joint-sealant backer materials in accordance with the specifications set forth in PENNDOT Publication 408 (latest Edition), as amended.

2.6 PRIMERS

A. Primers: Provide primers in accordance with the specifications set forth in PENNDOT Publication 408 (latest Edition), as amended.

PART 3 – EXECUTION

3.1 EXAMINATION

A. Examine joints indicated to receive joint sealants, with Installer present, for compliance with requirements for joint configuration, installation tolerances, and other conditions affecting joint-sealant performance.
   1. Proceed with installation only after unsatisfactory conditions have been corrected.

3.2 PREPARATION

A. Surface Cleaning of Joints: Clean out joints in accordance with the specifications set forth in PENNDOT Publication 408 (latest Edition), as amended.

B. Joint Priming: Prime joint substrates in accordance with the specifications set forth in PENNDOT Publication 408 (latest Edition), as amended.

3.3 INSTALLATION OF JOINT SEALANTS

A. General: Install joint sealants in accordance with the specifications set forth in PENNDOT Publication 408 (latest Edition), as amended, including joint sealants associated with concrete sidewalks.

3.4 CLEANING

A. Clean off excess sealants or sealant smears adjacent to joints as the Work progresses by methods and with cleaning materials approved by manufacturers of joint sealants and of products in which joints occur.

3.5 PROTECTION

A. Protect joint sealants during and after curing period from contact with contaminating substances and from damage resulting from construction operations or other causes so sealants are without deterioration or damage at time of Substantial Completion. If, despite such protection, damage or deterioration occurs, cut out and remove damaged or deteriorated joint sealants immediately and replace with joint sealant so installations with repaired areas are indistinguishable from the original work.

END OF SECTION 321373

SECTION 321726 - TACTILE WARNING SURFACING

PART 1 - GENERAL

1.1 RELATED DOCUMENTS

A. Drawings and general provisions of the Contract, including General and Supplementary Conditions and Division 01 Specification Sections, apply to this Section.

1.2 SUMMARY

A. Section Includes:

1. Detectable warning unit pavers.

B. Related Requirements:

1. Section 321313 "Concrete Paving" for concrete walkways serving as substrates for tactile warning surfacing.

1.3 ACTION SUBMITTALS

A. Product Data: For each type of product.

B. Samples for Initial Selection: For each type of exposed finish requiring color selection.

C. Samples for Verification: For each type of tactile warning surface, in manufacturer's standard sizes unless otherwise indicated, showing edge condition, truncated-dome pattern, texture, color, and cross section; with fasteners and anchors.

1.4 CLOSEOUT SUBMITTALS

A. Maintenance Data: For tactile warning surfacing, to include in maintenance manuals.

1.5 QUALITY ASSURANCE

A. Provide composite Cast In Place Replaceable Tactile Warning Surface Tiles (REP) as produced by a single manufacturer with a minimum of five years' experience in manufacturing Cast In Place Replaceable Tactile Warning Surface Tiles (REP).

B. Installer's Qualifications: Engage an experienced installer certified in writing by the Tactile Warning Surface manufacturer, who has successfully completed Tactile Warning Surface installations similar in material, design, and extent to that indicated for the Contract.

C. Cast In Place Replaceable Tactile Warning Surface Tiles (REP) must be compliant with ADAAG, PROWAG, and CA Title 24 requirements. Division of the State Architect IR 11B-3 (1/26/05) and IR 11B-4 (1/01/11). IR 11B-4 (1/01/11) removed the requirement for a "staggered" pattern and now calls for the "square grid" (in-line) pattern.

A. Cast In Place Replaceable Tactile Warning Surface Tiles (REP) shall meet or exceed the following test criteria using the most current test methods:

1. Compressive Strength: 28,900 psi minimum, when tested in accordance with ASTM D695.
2. Flexural Strength: 29,300 psi minimum, when tested in accordance with ASTM D790.
3. Water Absorption: Not to exceed 0.10%, when tested in accordance with ASTMD570.
4. Slip Resistance: 1.05 minimum wet and 1.18 dry static coefficient of friction when tested in accordance with ASTM C1028.
5. Flame Spread: 25 maximum, when tested in accordance with ASTM E84.
6. Salt and Spray Performance of Tactile Warning Surface: No deterioration or other defects after 200 hours of exposure, when tested in accordance with ASTM-B117.
7. Chemical Stain Resistance: No reaction to 1% hydrochloric acid, motor oil, calcium chloride, gum, soap solution, bleach, and antifreeze, when tested in accordance with ASTM D543.
8. Abrasion Resistance: 500 minimum, when tested in accordance with ASTM C501.
9. Accelerated Weathering of Tactile Warning Surface when tested by ASTM-G155 or ASTM G151 shall exhibit the following result: $\Delta E<5.0$ at 2,000 hours minimum exposure.
10. Tensile Strength: 11,000 psi minimum, when tested in accordance with ASTM D638.
11. AASHTO-H20 Load Bearing Test: No Damage at 16,000# loading.
12. Freeze/Thaw/Heat: No deterioration when tested in accordance with ASTM C 1026

1.6 PREINSTALLATION MEETINGS

A. Preinstallation Conference: Conduct conference at Project site.

1.7 PROJECT CONDITIONS

A. Cold-Weather Protection: Do not use frozen materials or materials mixed or coated with ice or frost. Do not build on frozen subgrade or setting beds. Remove and replace unit paver work damaged by frost or freezing.

B. Weather Limitations for Adhesive Application:

1. Apply adhesive only when ambient temperature is above 50 deg F (10 deg C) and when temperature has not been below 35 deg F (2 deg C) for 12 hours immediately before application. Do not apply when substrate is wet or contains excess moisture.

C. Weather Limitations for Mortar and Grout:

1. Cold-Weather Requirements: Comply with cold-weather construction requirements contained in ACI 530.1/ASCE 6/TMS 602.
2. Hot-Weather Requirements: Comply with hot-weather construction requirements contained in ACI 530.1/ASCE 6/TMS 602. Provide artificial shade and windbreaks, and use cooled materials as required. Do not apply mortar to substrates with temperatures of 100 deg F (38 deg C) and higher.

    a. When ambient temperature exceeds 100 deg F (38 deg C), or when wind velocity exceeds 8 mph (13 km/h) and ambient temperature exceeds 90 deg F (32 deg C), set unit pavers within 1 minute of spreading setting-bed mortar.

1.8 WARRANTY

A. Special Warranty: Manufacturer agrees to repair or replace components of tactile warning surfaces that fail in materials or workmanship within specified warranty period.

1. Failures include, but are not limited to, the following:

    a. Deterioration of finishes beyond normal weathering and wear.
    b. Separation or delamination of materials and components.

2. Warranty Period: Five years from date of Substantial Completion.

PART 2 - PRODUCTS

2.1 TACTILE WARNING SURFACING, GENERAL

A. Accessibility Requirements: Comply with applicable provisions in the U.S. Architectural & Transportation Barriers Compliance Board's ADA-ABA Accessibility Guidelines for Buildings and Facilities and ICC A117.1 for tactile warning surfaces.

1. For tactile warning surfaces composed of multiple units, provide units that when installed provide consistent side-to-side and end-to-end dome spacing that complies with requirements.

B. Source Limitations: Obtain each type of tactile warning surfacing, joint material, setting material, anchor, and fastener from single source with resources to provide materials and products of consistent quality in appearance and physical properties.

2.2 DETECTABLE WARNING PANELS

A. Detectable Warning Panels: Cast-In-Place (wet set) Replaceable Tactile Panels as manufactured by ADA Solutions Inc., Chelmsford, MA (Phone: 800-372-0519, Fax: 978-262-9125, Web Site: www.adatile.com , E: info@adatile.com), or approved equal.

1. Length and Width: Rectangular REP Tile: 2.35” Dome Spacing: 24”x36”, 24”x48”, 24”x60”, 36”x48”, 36”x60”, as needed to conform to ADA requirements
2. Radius REP Tile: 1.6” - 2.4” Dome Spacing [24”x33.25”]
3. Dome Spacing and Configuration: Manufacturer's standard compliant spacing, in manufacturer's standard pattern.
4. Color: Brick Red per Federal Standard 595B Table IV, Color No. 20109.
5. Cleaning materials used on site shall have code acceptable low VOC solvent content and low flammability.
6. The Specifications of the concrete, sealants and related materials shall be in accordance with the Contract Documents and the guidelines set by their respective manufacturers.

2.3 EQUIPMENT

A. Contractor shall provide all tools, equipment and services required for satisfactory installation per manufacturer’s instruction as Incidental Work. Equipment, which may be required include typical mason’s tools, a 2-foot long level with electronic slope readout, (2) 25-pound weights, and a rubber mallet with a piece of wood for tamping down the Tactile Warning Unit(s).

PART 3 - EXECUTION

3.1 EXAMINATION

A. Verify that pavement is in suitable condition to begin installation according to manufacturer's written instructions. Verify that installation of tactile warning surfacing will comply with accessibility requirements upon completion.

B. Proceed with installation only after unsatisfactory conditions have been corrected.

3.2 INSTALLATION OF TACTILE WARNING SURFACING

A. Contractor will not be allowed to install Tactile Warning Surface Tiles until all submittals have been reviewed and approved by the Engineer.

B. REP Tile shall be installed per manufacturer’s instructions.

C. To the maximum extent possible, the REP Tiles shall be oriented such that the rows of in-line truncated domes are parallel with the direction of the ramp. When multiple REP Tiles regardless of size are used, the truncated domes shall be aligned between the tactile warning surface tiles and throughout the entire tactile warning surface installation.

D. In accordance with the Proposed Accessibility Guidelines for Pedestrian Facilities in the Public Rights of Way (7/23/11, Access Board): Sections 304 + 305), Tactile Warning Surface Tile shall be located relative to the curb line as shown within Sections 304+305 of the Guidelines.

E. The REP Tiles shall be tamped or vibrated into the fresh concrete to ensure that there are no voids or air pockets, and the field level of the Tactile Warning Surface Tile is flush to the adjacent concrete surface or as the Drawings indicate to permit proper water drainage and eliminate tripping hazards between adjacent finishes.

F. On Continuous Runs: The Installer shall leave a 1/8" nominal gap between successive Tactile Warning Surface Tiles. As part of the concrete finishing operation, the Installer shall apply ¼" edge treatment around the perimeter of the Tactile Warning Surface Tiles to facilitate future replacement of the Tactile Warning Surface Tile. A Urethane Sealant such as Sikaflex 1a or BASF NP1 shall be applied to the edge treatment for a watertight Tactile Warning Surface Tile installation.

G. The manufacturer recommends that a maximum of 30 feet be installed in any single pour. Please call (800) 372-0519 for further details.

3.3 CLEANING AND PROTECTION

A. Protect tactile warning surfacing from damage and maintain free of stains, discoloration, dirt, and other foreign material. Protect REP Tiles against damage during construction period to comply with REP Tiles manufacturer's Specifications.

B. During and after the REP Tile installation and the concrete curing stage, it is imperative that there are no walking, leaning or external forces placed on the REP Tile to rock the REP Tile, causing a void between the underside of the REP Tile and the concrete substrate.

C. Remove Protective Plastic Sheeting from REP Tile within 24 hours of installation of the REP Tile. Particularly under hot weather conditions (80 degrees or higher), plastic sheeting will adhere strongly (resulting in difficult removal of same) to Tactile Warning Surface Tile when not removed quickly.

D. If requested by the Project Manager, clean REP Tiles not more than four (4) days prior to date scheduled for inspection intended to establish date of substantial completion in each area of project. Clean REP Tile by method specified by Tactile Warning Surface Products manufacturer.

END OF SECTION 321726

SECTION 321833 – MISC. SITE IMPROVEMENTS

PART-1 GENERAL

1.1 RELATED DOCUMENTS

A. Drawings and general provisions of the Contract, including General and Supplementary Conditions and Division 1 Specification Sections, apply to this Section.

1.2 SUMMARY

A. Section Includes:

1. Miscellaneous site improvements.

1.3 SUBMITTALS

A. Product Data: Manufacturer's technical and descriptive literature for each item specified.

B. Shop Drawings: Submit shop drawings which fully and comprehensively detail all items of equipment, with erection and installation requirements. Submit footing design stamped by Professional Engineer registered in Commonwealth of PA.

C. Samples:

1. Show selected finishes for equipment and furnishings.

1.3 REFERENCES

A. Certain specifications of the following organizations are referred to and included herein as though repeated in full.

1. PDT, PaDOT, or PennDOT: Pennsylvania Department of Transportation - Publication 408.
2. ASTM: American Society for Testing Materials, Latest Edition.

PART 2 - PRODUCTS

2.1 BASIC MATERIALS

A. Poured-in-place concrete work (class AA – 3500 psi) shall be as specified in PennDOT publication 408 Specifications for Cement Concrete, Section 704.1.

B. Precast Concrete Components: Standard products of manufacturers having regular production of types and quality of roadway type fittings conforming to Penn DOT Publication 408 specifications.

2.2 OUTDOOR IMPROVEMENTS

A. FLAGPOLE

1. Furnish and install one (1) Continental Series 40’ flagpole, Model Number ESR35D61-ABL, Black Anodized finish, TRK-9446-GDT 8” Gold Exterior Ball Truck, CCA-8030-BLK Padlocking Cleat Cover, COL1-A06S-BLK FC-11 Spun Aluminum Collar, with Ground Sleeve components, as provided by Concord American Flagpole, 4155 Patriot Drive, Suite 100, Grapevine, TX 76051, 800-527-3902, or approved equal.
2. Furnish one (1) 6’ x 10’ nylon outdoor American flag, as provided by Concord American Flagpole, 4155 Patriot Drive, Suite 100, Grapevine, TX 76051, 800-527-3902, or approved equal.

PART 3 - EXECUTION

3.1 INSTALLATION: GENERAL

A. Assemble and install miscellaneous improvements in accordance with manufacturer’s written instructions, the requirements specified under Parts 1 and 2 of this Section, and in conformance with the Drawings and Shop Drawings.

END OF SECTION 321833

SECTION 323113 - CHAIN LINK FENCES AND GATES

PART 1 - GENERAL

1.1 RELATED DOCUMENTS

A. Drawings and general provisions of the Contract, including General and Supplementary Conditions and Division 01 Specification Sections, apply to this Section.

1.2 SUMMARY

A. Section Includes:

1. Chain-link fences.
2. Swing gates.

B. Related Requirements:

1. Section 281500 "Access Control Hardware Devices" for gate controls.

1.3 ACTION SUBMITTALS

A. Product Data: For each type of product.

1. Include construction details, material descriptions, dimensions of individual components and profiles, and finishes for the following:

a. Fence and gate posts, rails, and fittings.
b. Chain-link fabric, reinforcements, and attachments.
c. Gates and hardware.

B. Shop Drawings: For each type of fence and gate assembly.

1. Include plans, elevations, sections, details, and attachments to other work.
2. Include accessories, hardware, gate operation, and operational clearances.

C. Samples for Verification: For each type of component with factory-applied finish, prepared on Samples of size indicated below:

1. Polymer-Coated Components: In 6-inch (150-mm) lengths for components and on full-sized units for accessories.

D. Delegated-Design Submittal: For structural performance of chain-link fence and gate frameworks, including analysis data signed and sealed by the qualified professional engineer responsible for their preparation.

1.4 INFORMATIONAL SUBMITTALS

A. Qualification Data: For factory-authorized service representative.

B. Product Certificates: For each type of chain-link fence and gate.

C. Product Test Reports: For framework strength according to ASTM F1043, for tests performed by manufacturer and witnessed by a qualified testing agency or a qualified testing agency.

D. Sample Warranty: For special warranty.

1.5 CLOSEOUT SUBMITTALS

A. Operation and Maintenance Data: For gate operators to include in emergency, operation, and maintenance manuals.

1.6 FIELD CONDITIONS

A. Field Measurements: Verify layout information for chain-link fences and gates shown on Drawings in relation to property survey and existing structures. Verify dimensions by field measurements.

1.7 WARRANTY

A. Special Warranty: Installer agrees to repair or replace components of chain-link fences and gates that fail in materials or workmanship within specified warranty period.

1. Failures include, but are not limited to, the following:

a. Failure to comply with performance requirements.
b. Deterioration of metals, metal finishes, and other materials beyond normal weathering.
c. Faulty operation of gate operators and controls.

2. Warranty Period: Five (5) years from date of Substantial Completion.

PART 2 - PRODUCTS

2.1 PERFORMANCE REQUIREMENTS

A. Delegated Design: Engage a qualified professional engineer, as defined in Section 014000 "Quality Requirements," to design chain-link fence and gate frameworks.

B. Structural Performance: Chain-link fence and gate frameworks shall withstand the design wind loads and stresses for fence height(s) and under exposure conditions indicated according to ASCE/SEI 7.

1. Design Wind Load: 120 MPH.

a. Minimum Post Size and Maximum Spacing: Determine according to CLFMI WLG 2445, based on mesh size and pattern specified.

C. Lightning Protection System: Maximum resistance-to-ground value of 25 ohms at each grounding location along fence under normal dry conditions.

2.2 CHAIN-LINK FENCE FABRIC

A. General: Provide fabric in one-piece heights measured between top and bottom of outer edge of selvage knuckle or twist according to "CLFMI Product Manual" and requirements indicated below:

1. Fabric Height: Six (6) feet.
2. Steel Wire for Fabric: Wire diameter of 0.120 inch (3.05 mm).

a. Mesh Size: 1 inch (25 mm).
b. Polymer-Coated Fabric: ASTM F668, Class 2b over zinc -coated steel wire.

1) Color: Black, according to ASTM F934.

3. Selvage: Knuckled at both selvages.

2.3 FENCE FRAMEWORK

A. Posts and Rails: ASTM F1043 for framework, including rails, braces, and line; terminal; and corner posts. Provide members with minimum dimensions and wall thickness according to ASTM F1043 based on the following:

1. Fence Height: 72 inches (1830 mm).

a. Line Post: 2.375 inches (60 mm) in diameter.
b. End, Corner, and Pull Posts: 2.875 inches (73 mm).

2. Horizontal Framework Members: Intermediate, top, and bottom rails according to ASTM F1043.

a. Top Rail: 1.66 inches (42 mm) in diameter.

3. Polymer coating over metallic coating.

a. Color: Black, according to ASTM F934.

2.4 SWING GATES

A. General: ASTM F900 for gate posts and single & double swing gate types.

1. Gate Leaf Width: As indicated.
2. Framework Member Sizes and Strength: Based on gate fabric height of 72 inches (1830 mm) or less.

B. Pipe and Tubing:

1. Zinc-Coated Steel: ASTM F1043 and ASTM F1083; protective coating and finish to match fence framework.
2. Gate Posts: Round tubular steel.
3. Gate Frames and Bracing: Round tubular steel.

C. Frame Corner Construction: Welded.

D. Hardware:

1. Hinges: 180-degree outward swing.
2. Latch: Permitting operation from both sides of gate with provision for padlocking accessible from both sides of gate.
3. Closer: Manufacturer's standard.
4. Panic hardware: TBD by Architect.

2.5 FITTINGS

A. Provide fittings according to ASTM F626.

B. Post Caps: Provide for each post.

1. Provide line post caps with loop to receive tension wire or top rail.

C. Rail and Brace Ends: For each gate, corner, pull, and end post.

D. Rail Fittings: Provide the following:

1. Top Rail Sleeves: Pressed-steel or round-steel tubing not less than 6 inches (152 mm) long.
2. Rail Clamps: Line and corner boulevard clamps for connecting intermediate and bottom rails to posts.

E. Tension and Brace Bands: Pressed steel.

F. Tension Bars: **Steel**, length not less than 2 inches (50 mm) shorter than full height of chain-link fabric. Provide one bar for each gate and end post, and two for each corner and pull post, unless fabric is integrally woven into post.

G. Tie Wires, Clips, and Fasteners: According to ASTM F626.

1. Standard Round Wire Ties: For attaching chain-link fabric to posts, rails, and frames, according to the following:

    a. Hot-Dip Galvanized Steel: 0.148-inch- (3.76-mm-) diameter wire; galvanized coating thickness and coating matching coating thickness of chain-link fence fabric.

H. Finish:

1. Metallic Coating for Pressed Steel or Cast Iron: Not less than 1.2 oz./sq. ft. (366 g/sq. m) of zinc.

    a. Polymer coating over metallic coating.

2.6 GROUT AND ANCHORING CEMENT

A. Nonshrink, Nonmetallic Grout: Factory-packaged, nonstaining, noncorrosive, nongaseous grout complying with ASTM C1107/C1107M. Provide grout, recommended in writing by manufacturer, for exterior applications.

B. Anchoring Cement: Factory-packaged, nonshrink, nonstaining, hydraulic-controlled expansion cement formulation for mixing with water at Project site to create pourable anchoring, patching, and grouting compound. Provide formulation that is resistant to erosion from water exposure without needing protection by a sealer or waterproof coating, and that is recommended in writing by manufacturer for exterior applications.

2.7 GROUNDING MATERIALS

A. Comply with requirements in Section 260526 "Grounding and Bonding for Electrical Systems."

B. Connectors and Grounding Rods: Listed and labeled for complying with UL 467.

1. Connectors for Below-Grade Use: Exothermic welded type.
2. Grounding Rods: Copper-clad steel, 5/8 by 96 inches (16 by 2440 mm).

PART 3 - EXECUTION

3.1 EXAMINATION

A. Examine areas and conditions, with Installer present, for compliance with requirements for site clearing, earthwork, pavement work, and other conditions affecting performance of the Work.

1. Do not begin installation before final grading is completed unless otherwise permitted by Architect.

B. Proceed with installation only after unsatisfactory conditions have been corrected.

3.2 PREPARATION

A. Stake locations of fence lines, gates, and terminal posts. Do not exceed intervals of 500 feet (152 m) or line of sight between stakes. Indicate locations of utilities, lawn sprinkler system, underground structures, benchmarks, and property monuments.

3.3 CHAIN-LINK FENCE INSTALLATION

A. Install chain-link fencing according to ASTM F567 and more stringent requirements specified.

1. Install fencing on established boundary lines inside property line.

B. Post Excavation: Drill or hand-excavate holes for posts to diameters and spacings indicated, in firm, undisturbed soil.

C. Post Setting: Set posts in concrete at indicated spacing into firm, undisturbed soil.

1. Verify that posts are set plumb, aligned, and at correct height and spacing, and hold in position during setting with concrete or mechanical devices.
2. Concrete Fill: Place concrete around posts to dimensions indicated and vibrate or tamp for consolidation. Protect aboveground portion of posts from concrete splatter.

a. Concealed Concrete: Place top of concrete 2 inches (50 mm) below grade to allow covering with surface material.

D. Terminal Posts: Install terminal end, corner, and gate posts according to ASTM F567 and terminal pull posts at changes in horizontal or vertical alignment of 15 degrees or more. For runs exceeding 500 feet (152 m), space pull posts an equal distance between corner or end posts.

E. Line Posts: Space line posts uniformly at 10 feet (3 m), o.c.

F. Post Bracing and Intermediate Rails: Install according to ASTM F567, maintaining plumb position and alignment of fence posts. Diagonally brace terminal posts to adjacent line posts with truss rods and turnbuckles. Install braces at end and gate posts and at both sides of corner and pull posts.

1. Locate horizontal braces at midheight of fabric 72 inches (1830 mm) or higher, on fences with top rail, and at two-third fabric height on fences without top rail. Install so posts are plumb when diagonal rod is under proper tension.

G. Top Rail: Install according to ASTM F567, maintaining plumb position and alignment of fence posts. Run rail continuously through line post caps, bending to radius for curved runs and terminating into rail end attached to posts or post caps fabricated to receive rail at terminal posts. Provide expansion couplings as recommended in writing by fencing manufacturer.

H. Intermediate and Bottom Rails: Secure to posts with fittings.

I. Chain-Link Fabric: Apply fabric to **outside** of enclosing framework. Leave 2-inch (50-mm) bottom clearance between finish grade or surface and bottom selvage unless otherwise indicated. Pull fabric taut and tie to posts, rails, and tension wires. Anchor to framework so fabric remains under tension after pulling force is released.

J. Tension or Stretcher Bars: Thread through fabric and secure to end, corner, pull, and gate posts, with tension bands spaced not more than 15 inches (380 mm) o.c.

K. Tie Wires: Use wire of proper length to firmly secure fabric to line posts and rails. Attach wire at one end to chain-link fabric, wrap wire around post a minimum of 180 degrees, and attach other end to chain-link fabric according to ASTM F626. Bend ends of wire to minimize hazard to individuals and clothing.

1. Maximum Spacing: Tie fabric to line posts and to braces at 12 inches (300 mm) o.c.

3.4 GATE INSTALLATION

A. Install gates according to manufacturer's written instructions, level, plumb, and secure for full opening without interference. Attach fabric as for fencing. Attach hardware using tamper-resistant or concealed means. Install ground-set items in concrete for anchorage. Adjust hardware for smooth operation.

3.5 ADJUSTING

A. Gates: Adjust gates to operate smoothly, easily, and quietly, free of binding, warp, excessive deflection, distortion, nonalignment, misplacement, disruption, or malfunction, throughout entire operational range. Confirm that latches and locks engage accurately and securely without forcing or binding.

B. Lubricate hardware and other moving parts.

3.6 DEMONSTRATION

A. Engage a factory-authorized service representative to train Owner's maintenance personnel to adjust, operate, and maintain chain-link fences and gates.

END OF SECTION 323113

SECTION 329200 - TURF AND GRASSES

PART 1 - GENERAL

1.1 SUMMARY

A. Section Includes:

1. Seeding.
2. Hydroseeding.

1.2 DEFINITIONS

A. Pesticide: A substance or mixture intended for preventing, destroying, repelling, or mitigating a pest. This includes insecticides, miticides, herbicides, fungicides, rodenticides, and molluscicides. It also includes substances or mixtures intended for use as a plant regulator, defoliant, or desiccant.

B. Planting Soil: Existing, on-site soil; imported soil; or manufactured soil that has been modified with soil amendments and perhaps fertilizers to produce a soil mixture best for plant growth.

1.3 PREINSTALLATION MEETINGS

A. Preinstallation Conference: Conduct conference at Project site.

1.4 INFORMATIONAL SUBMITTALS

A. Certification of grass seed.

1. Certification of each seed mixture for turfgrass seed and sod.

B. Product certificates.

1.5 QUALITY ASSURANCE

A. Installer Qualifications: A qualified landscape Installer whose work has resulted in successful turf establishment.

1. Installer's Field Supervision: Require Installer to maintain an experienced full-time supervisor on Project site when work is in progress.
2. Personnel Certifications: Installer's field supervisor shall have certification in one of the following categories from the Professional Landcare Network:

a. Landscape Industry Certified Technician - Exterior.
b. Landscape Industry Certified Lawncare Manager.
c. Landscape Industry Certified Lawncare Technician.

3. Pesticide Applicator: State licensed, commercial.

1.6 DELIVERY, STORAGE, AND HANDLING

A. Seed and Other Packaged Materials: Deliver packaged materials in original, unopened containers showing weight, certified analysis, name and address of manufacturer, and indication of compliance with state and Federal laws, as applicable.

1.7 PROJECT CONDITIONS

A. Planting Restrictions: Plant during one of the periods as specified in PennDOT Publication 408, Sections 808 and 809, latest edition as amended. Coordinate planting periods with initial maintenance periods to provide required maintenance from date of Substantial Completion.

B. Weather Limitations: Proceed with planting only when existing and forecasted weather conditions permit planting to be performed when beneficial and optimum results may be obtained. Apply products during favorable weather conditions according to manufacturer's written instructions and warranty requirements.

1.8 MAINTENANCE SERVICE

A. Initial Maintenance Service for Turfs and Grasses: Provide maintenance by skilled employees of lawn Installer. Maintain as required in Part 3. Begin maintenance immediately after lawns are installed and continue until lawns are acceptably healthy, well established and meeting requirements of satisfactory turf described in Part 3, but for not less than maintenance period below.

1. Maintenance Period: 1 month from date of Substantial Completion.

PART 2 - PRODUCTS

2.1 SEED

A. Grass Seed: Fresh, clean, dry, new-crop seed complying with AOSA's "Rules for Testing Seeds" for purity and germination tolerances.

B. Seed Species: Seed shall be furnished in separate varieties, individually packaged, and subject to examination by the Construction Manager before mixing. State-certified seed of grass species as follows:

1. Temporary Seed Mixture

a. Temporary seeding shall consist of annual ryegrass (100 percent by weight), or equivalent, and shall be placed at the rate of 40 lbs per acre. Temporary seeding shall be applied to those areas that are a potential erosion problem during construction and to those areas exposed for longer than 20 calendar days. If conditions do not permit temporary seeding, mulching shall be employed. Additionally, nitrogen fertilizer (50-50-50) at one (1) ton per acre, agricultural lime at one (1) ton per acre, and straw mulch at three (3) tons per acre. Straw mulch shall be applied in long strands, not chopped or finely broken.

2. Permanent seed Mixture

a. 100 percent turf type tall fescue (by Jacklin Seed, or approved equal). See plans for additional information.

2.2 FERTILIZERS

A. Commercial Fertilizer: Commercial-grade complete fertilizer of neutral character, consisting of fast- and slow-release nitrogen, 50 percent derived from natural organic sources of urea formaldehyde, phosphorous, and potassium in the following composition:

1. Composition: 1 lb/1000 sq. ft. of actual nitrogen, 4 percent phosphorous, and 2 percent potassium, by weight.

B. Slow-Release Fertilizer: Granular or pelleted fertilizer consisting of 50 percent water-insoluble nitrogen, phosphorus, and potassium in the following composition:

1. Composition: 20 percent nitrogen, 10 percent phosphorous, and 10 percent potassium, by weight.

2.3 MULCHES

A. Straw Mulch: Provide air-dry, clean, mildew- and seed-free, salt hay or threshed straw of wheat, rye, oats, or barley.

B. Sphagnum Peat Mulch: Partially decomposed sphagnum peat moss, finely divided or of granular texture, and with a pH range of 3.4 to 4.8.

C. Muck Peat Mulch: Partially decomposed moss peat, native peat, or reed-sedge peat, finely divided or of granular texture, with a pH range of 6 to 7.5, and having a water-absorbing capacity of 1100 to 2000 percent, and containing no sand.

D. Compost Mulch: Well-composted, stable, and weed-free organic matter, pH range of 5.5 to 8; moisture content 35 to 55 percent by weight; 100 percent passing through 1-inch sieve; soluble salt content of 2 to 5 decisiemens/m; not exceeding 0.5 percent inert contaminants and free of substances toxic to plantings; and as follows:

2.4 PESTICIDES

A. General: Pesticide, registered and approved by the EPA, acceptable to authorities having jurisdiction, and of type recommended by manufacturer for each specific problem and as required for Project conditions and application. Do not use restricted pesticides unless authorized in writing by authorities having jurisdiction.

PART 3 - EXECUTION

3.1 TURF AREA PREPARATION

A. General: Prepare planting area for soil placement and mix planting soil.

B. Moisten prepared area before planting if soil is dry. Water thoroughly and allow surface to dry before planting. Do not create muddy soil.

C. Before planting, obtain Architect's acceptance of finish grading; restore planting areas if eroded or otherwise disturbed after finish grading.

3.2 SEEDING

A. Sow seed with spreader or seeding machine. Do not broadcast or drop seed when wind velocity exceeds 5 mph.

1. Evenly distribute seed by sowing equal quantities in two directions at right angles to each other.
2. Do not use wet seed or seed that is moldy or otherwise damaged.
3. Do not seed against existing trees. Limit extent of seed to outside edge of planting saucer.

B. Sow seed at a total rate of 2 lb/1000 sq. ft.

C. Rake seed lightly into top 1/8 inch of soil, roll lightly, and water with fine spray.

D. Protect seeded areas with slopes not exceeding 1:6 by spreading straw mulch. Spread uniformly at a minimum rate of 2 tons/acre to form a continuous blanket 1-1/2 inches in loose thickness over seeded areas.

1. Anchor straw mulch by crimping into soil with suitable mechanical equipment.

E. Protect seeded areas from hot, dry weather or drying winds by applying planting soil within 24 hours after completing seeding operations. Soak areas, scatter mulch uniformly to a thickness of 3/16 inch, and roll surface smooth.

3.3 HYDROSEEDING

A. Protect structures, utilities, sidewalks, pavements, and other facilities, trees, shrubs, and plantings from damage caused by planting operations.
   1. Protect adjacent and adjoining areas from hydroseeding and hydromulching overspray.
   2. Protect grade stakes set by others until directed to remove them.

B. Provide erosion-control measures to prevent erosion and displacement of soils and discharge of soil-bearing water runoff or airborne dust to adjacent properties and walkways.

3.4 TURF MAINTENANCE

A. General: Maintain and establish turf by watering, fertilizing, weeding, mowing, trimming, replanting, and performing other operations as required to establish healthy, viable turf. Roll, regrade, and replant bare or eroded areas and re-mulch to produce a uniformly smooth turf. Provide the same materials and installation as those used in the original installation.

B. Mow turf as soon as top growth reaches 3 to 3½ inches. Repeat mowing to maintain specified height without cutting more than one-third of grass height. Remove no more than one-third of grass-leaf growth in initial or subsequent mowings.

3.5 SATISFACTORY TURF

A. Turf installations shall meet the following criteria as determined by Architect:

   1. Satisfactory Seeded Turf: At end of maintenance period, a healthy, uniform, close stand of grass has been established, free of weeds and surface irregularities, with coverage exceeding 90 percent over any 10 sq. ft. and bare spots not exceeding 5 by 5 inches.

B. Use specified materials to reestablish turf that does not comply with requirements, and continue maintenance as described above until turf is satisfactory.

END OF SECTION 329200

SECTION 329300 - PLANTS

PART 1 - GENERAL

1.1 RELATED DOCUMENTS

A. Drawings and general provisions of the Contract, including General and Supplementary Conditions and Division 01 Specification Sections, apply to this Section.

1.2 SUMMARY

A. Section Includes:

1. Plants.
2. Planting soils.
3. Edging.

B. Related Sections:

1. Section 31 10 00 "Site Clearing" for protection of existing trees and plantings, topsoil stripping and stockpiling, and site clearing.
2. Section 31 20 00 "Earth Moving" for excavation, filling, and rough grading and for subsurface aggregate drainage and drainage backfill materials.
3. Section 32 92 00 "Turf and Grasses" for turf (lawn) planting.

1.3 DEFINITIONS

A. Backfill: The earth used to replace or the act of replacing earth in an excavation.

B. Container-Grown Stock: Healthy, vigorous, well-rooted plants grown in a container, with a well-established root system reaching sides of container and maintaining a firm ball when removed from container. Container shall be rigid enough to hold ball shape and protect root mass during shipping and be sized according to ANSI Z60.1 for type and size of plant required.

C. Duff Layer: The surface layer of native topsoil that is composed of mostly decayed leaves, twigs, and detritus.

D. Finish Grade: Elevation of finished surface of planting soil.

E. Pesticide: A substance or mixture intended for preventing, destroying, repelling, or mitigating a pest. This includes insecticides, miticides, herbicides, fungicides, rodenticides, and molluscicides. It also includes substances or mixtures intended for use as a plant regulator, defoliant, or desiccant.

F. Pests: Living organisms that occur where they are not desired, or that cause damage to plants, animals, or people. These include insects, mites, grubs, mollusks (snails and slugs), rodents (gophers, moles, and mice), unwanted plants (weeds), fungi, bacteria, and viruses.

G. Planting Area: Areas to be planted.

H. Planting Soil: Standardized topsoil; existing, native surface topsoil; existing, in-place surface soil; or imported topsoil that is modified with soil amendments and perhaps fertilizers to produce a soil mixture best for plant growth.

I. Plant; Plants; Plant Material: These terms refer to vegetation in general, including trees, shrubs, vines, ground covers, ornamental grasses, bulbs, corms, tubers, or herbaceous vegetation.

J. Subgrade: Surface or elevation of subsoil remaining after excavation is complete, or the top surface of a fill or backfill before planting soil is placed.

K. Subsoil: All soil beneath the topsoil layer of the soil profile, and typified by the lack of organic matter and soil organisms.

L. Surface Soil: Soil that is present at the top layer of the existing soil profile at the Project site. In undisturbed areas, the surface soil is typically topsoil; but in disturbed areas such as urban environments, the surface soil can be subsoil.

1.4 SUBMITTALS

A. Product Data: For each type of product indicated, including soils.

1. Plant Materials: Include quantities, sizes, quality, and sources for plant materials.
2. Pesticides and Herbicides: Include product label and manufacturer's application instructions specific to the Project.
3. Plant Photographs: Include color photographs in digital or 3- by 5-inch print format of each required species and size of plant material as it will be furnished to the Project. Take photographs from an angle depicting true size and condition of the typical plant to be furnished. Include a scale rod or other measuring device in each photograph. For species where more than 20 plants are required, include a minimum of three photographs showing the average plant, the best quality plant, and the worst quality plant to be furnished. Identify each photograph with the full scientific name of the plant, plant size, and name of the growing nursery.

B. Samples for Verification: For each of the following:

1. Organic Mulch: 1-pint volume of each organic mulch required; in sealed plastic bags labeled with composition of materials by percentage of weight and source of mulch. Each Sample shall be typical of the lot of material to be furnished; provide an accurate representation of color, texture, and organic makeup.

C. Qualification Data: For qualified landscape Installer. Include list of similar projects completed by Installer demonstrating Installer's capabilities and experience. Include project names, addresses, and year completed, and include names and addresses of owners' contact persons.

D. Product Certificates: For each type of manufactured product, from manufacturer, and complying with the following:

1. Manufacturer's certified analysis of standard products.
2. Analysis of other materials by a recognized laboratory made according to methods established by the Association of Official Analytical Chemists, where applicable.

E. Material Test Reports: For existing native surface topsoil and imported topsoil.

F. Maintenance Instructions: Recommended procedures to be established by Owner for maintenance of plants during a calendar year. Submit before start of required maintenance periods.

G. Warranty: Sample of special warranty.

1.5 QUALITY ASSURANCE

A. Installer Qualifications: A qualified landscape Installer whose work has resulted in successful establishment of plants.

1. Professional Membership: Installer shall be a member in good standing of either the Professional Landcare Network or the American Nursery and Landscape Association.
2. Experience: Three years' experience in landscape installation in addition to requirements in Section 014500 "Quality Control."
3. Installer's Field Supervision: Require Installer to maintain an experienced full-time supervisor on Project site when work is in progress.
4. Personnel Certifications: Installer's field supervisor shall have certification in one of the following categories from the Professional Landcare Network:

   a. Certified Landscape Technician - Exterior, with installation and maintenance specialty area(s), designated CLT-Exterior.
   b. Certified Ornamental Landscape Professional, designated COLP.

5. Pesticide Applicator: State licensed, commercial.

B. Soil-Testing Laboratory Qualifications: An independent or university laboratory, recognized by the State Department of Agriculture, with the experience and capability to conduct the testing indicated and that specializes in types of tests to be performed.

C. Soil Analysis: For each unamended soil type, furnish soil analysis and a written report by a qualified soil-testing laboratory stating percentages of organic matter; gradation of sand, silt, and clay content; cation exchange capacity; deleterious material; pH; and mineral and plant-nutrient content of the soil.

1. Testing methods and written recommendations shall comply with USDA's Handbook No. 60.
2. The soil-testing laboratory shall oversee soil sampling; with depth, location, and number of samples to be taken per instructions from Landscape Architect. A minimum of three representative samples shall be taken from varied locations for each soil to be used or amended for planting purposes.
3. Report suitability of tested soil for plant growth.

    a. Based upon the test results, state recommendations for soil treatments and soil amendments to be incorporated. State recommendations in weight per 1000 sq. ft. or volume per cu. yd. for nitrogen, phosphorus, and potash nutrients and soil amendments to be added to produce satisfactory planting soil suitable for healthy, viable plants.
    b. Report presence of problem salts, minerals, or heavy metals, including aluminum, arsenic, barium, cadmium, chromium, cobalt, lead, lithium, and vanadium. If such problem materials are present, provide additional recommendations for corrective action.

D. Provide quality, size, genus, species, and variety of plants indicated, complying with applicable requirements in ANSI Z60.1.

E. Measurements: Measure according to ANSI Z60.1.

F. Plant Material Observation: Landscape Architect may observe plant material either at place of growth or at site before planting for compliance with requirements for genus, species, variety, cultivar, size, and quality. Landscape Architect retains right to observe plants further for size and condition of balls and root systems, pests, disease symptoms, injuries, and latent defects and to reject unsatisfactory or defective material at any time during progress of work. Remove rejected plants immediately from Project site.

    1. Notify Landscape Architect of sources of planting materials seven days in advance of delivery to site.

G. Preinstallation Conference: Conduct conference at Project site.

1.6 DELIVERY, STORAGE, AND HANDLING

A. Packaged Materials: Deliver packaged materials in original, unopened containers showing weight, certified analysis, name and address of manufacturer, and indication of conformance with state and federal laws if applicable.

B. Bulk Materials:

    1. Do not dump or store bulk materials near structures, utilities, walkways and pavements, or on existing turf areas or plants.
    2. Provide erosion-control measures to prevent erosion or displacement of bulk materials, discharge of soil-bearing water runoff, and airborne dust reaching adjacent properties, water conveyance systems, or walkways.

3. Accompany each delivery of bulk fertilizers, lime, and soil amendments with appropriate certificates.

C. Provide protective covering of plants during shipping and delivery. Do not drop plants during delivery and handling.

D. Handle planting stock by root ball or container.

E. Deliver plants after preparations for planting have been completed, and install immediately. If planting is delayed more than six hours after delivery, set plants and trees in their appropriate aspect (sun, filtered sun, or shade), protect from weather and mechanical damage, and keep roots moist.
   1. Do not remove container-grown stock from containers before time of planting.
   2. Water root systems of plants stored on-site deeply and thoroughly with a fine-mist spray. Water as often as necessary to maintain root systems in a moist, but not overly-wet condition.

1.7 PROJECT CONDITIONS

A. Field Measurements: Verify actual grade elevations, service and utility locations, irrigation system components, and dimensions of plantings and construction contiguous with new plantings by field measurements before proceeding with planting work.

B. Interruption of Existing Services or Utilities: Do not interrupt services or utilities to facilities occupied by Owner or others unless permitted under the following conditions and then only after arranging to provide temporary services or utilities according to requirements indicated:

   1. Notify Landscape Architect no fewer than two days in advance of proposed interruption of each service or utility.
   2. Do not proceed with interruption of services or utilities without Landscape Architect's written permission.

C. Planting Restrictions: Plant during one of the periods as specified in PennDOT Publication 408, Section 808 “Plants, Planting, and Transplanting,” latest edition as amended. Coordinate planting periods with initial maintenance periods to provide required maintenance from date of Substantial Completion.

D. Weather Limitations: Proceed with planting only when existing and forecasted weather conditions permit planting to be performed when beneficial and optimum results may be obtained. Apply products during favorable weather conditions according to manufacturer's written instructions and warranty requirements.

E. Coordination with Turf Areas (Lawns): Plant material after finish grades are established and before planting turf areas unless otherwise indicated.

   1. When planting trees, shrubs, and other plants after planting turf areas, protect turf areas, and promptly repair damage caused by planting operations.

1.8 WARRANTY

A. Special Warranty: Installer agrees to repair or replace plantings and accessories that fail in materials, workmanship, or growth within specified warranty period.

1. Failures include, but are not limited to, the following:

a. Death and unsatisfactory growth, except for defects resulting from abuse, lack of adequate maintenance, or neglect by Owner, or incidents that are beyond Contractor's control.
b. Structural failures including plantings falling or blowing over.
c. Faulty performance of tree stabilization.
d. Deterioration of metals, metal finishes, and other materials beyond normal weathering.

2. Warranty Periods from Date of Substantial Completion:

a. Ornamental Grasses and Groundcovers: 12 months.

3. Include the following remedial actions as a minimum:

a. Immediately remove dead plants and replace unless required to plant in the succeeding planting season.
b. Replace plants that are more than 25 percent dead or in an unhealthy condition at end of warranty period.
c. A limit of one replacement of each plant will be required except for losses or replacements due to failure to comply with requirements.
d. Provide extended warranty for period equal to original warranty period, for replaced plant material.

1.9 MAINTENANCE SERVICE

A. Initial Maintenance Service for Trees and Shrubs: Provide maintenance by skilled employees of landscape Installer. Maintain as required in Part 3. Begin maintenance immediately after plants are installed and continue until plantings are acceptably healthy and well established but for not less than maintenance period below.

1. Maintenance Period: 1 month from date of Substantial Completion.

PART 2 - PRODUCTS

2.1 PLANT MATERIAL

A. General: Furnish nursery-grown plants true to genus, species, variety, cultivar, stem form, shearing, and other features indicated in Plant Schedule or Plant Legend shown on Drawings and complying with ANSI Z60.1; and with healthy root systems developed by transplanting or root pruning. Provide well-shaped, fully branched, healthy, vigorous stock, densely foliated

when in leaf and free of disease, pests, eggs, larvae, and defects such as knots, sun scald, injuries, abrasions, and disfigurement.

B. Provide plants of sizes, grades, and ball or container sizes complying with ANSI Z60.1 for types and form of plants required. Plants of a larger size may be used if acceptable to Landscape Architect, with a proportionate increase in size of roots or balls.

C. Labeling: Label at least one plant of each variety, size, and caliper with a securely attached, waterproof tag bearing legible designation of common name and full scientific name, including genus and species. Include nomenclature for hybrid, variety, or cultivar, if applicable for the plant as shown on Drawings.

D. If formal arrangements or consecutive order of plants is shown on Drawings, select stock for uniform height and spread, and number the labels to assure symmetry in planting.

2.2 FERTILIZERS

A. Commercial Fertilizer: Commercial-grade complete fertilizer of neutral character, consisting of fast- and slow-release nitrogen, 50 percent derived from natural organic sources of urea formaldehyde, phosphorous, and potassium in the following composition:

1. Composition: Nitrogen, phosphorous, and potassium in amounts shown on approved Erosion and Sedimentation Control Plan.

2.3 PLANTING SOILS

A. Planting Soil: Existing, native surface topsoil formed under natural conditions with the duff layer retained during excavation process and stockpiled on-site. Verify suitability of native surface topsoil to produce viable planting soil. Clean soil of roots, plants, sod, stones, clay lumps, and other extraneous materials harmful to plant growth.

1. Supplement with imported topsoil planting soil when quantities are insufficient.
2. Mix existing, native surface topsoil with the following soil amendments and fertilizers in the following quantities to produce planting soil:

   a. Ratio of Loose Sphagnum Peat to Topsoil by Volume: 1:3.
   b. Weight of Lime per acre: 1 ton.
   c. Weight of Sulfur, Iron Sulfate, and Aluminum Sulfate per 1000 Sq. Ft.: as recommended through soil testing.
   d. Weight of Agricultural Gypsum per 1000 Sq. Ft.: as recommended through soil testing.
   e. Weight of Commercial Fertilizer per 1000 Sq. Ft.: 1200 lbs.

B. Planting Soil: Imported topsoil from off-site sources. Obtain topsoil displaced from naturally well-drained construction or mining sites where topsoil occurs at least 4 inches deep; do not obtain from agricultural land, bogs, or marshes.

1. Additional Properties of Imported Topsoil: Screened and free of stones 1 inch or larger in any dimension; free of roots, plants, sod, clods, clay lumps, pockets of coarse sand, paint, paint washout, concrete slurry, concrete layers or chunks, cement, plaster, building debris, oils, gasoline, diesel fuel, paint thinner, turpentine, tar, roofing compound, acid, and other extraneous materials harmful to plant growth; free of obnoxious weeds and invasive plants including quackgrass, Johnsongrass, poison ivy, nutsedge, nimblewill, Canada thistle, bindweed, bentgrass, wild garlic, ground ivy, perennial sorrel, and bromegrass; not infested with nematodes; grubs; or other pests, pest eggs, or other undesirable organisms and disease-causing plant pathogens; friable and with sufficient structure to give good tilth and aeration. Continuous, air-filled pore space content on a volume/volume basis shall be at least 15 percent when moisture is present at field capacity. Soil shall have a field capacity of at least 15 percent on a dry weight basis.
2. Mix imported topsoil with the following soil amendments and fertilizers in the following quantities to produce planting soil:
    a. Ratio of Loose Sphagnum Peat to Topsoil by Volume: 1:3.
    b. Weight of Lime per acre: 1 ton.
    c. Weight of Sulfur, Iron Sulfate, and Aluminum Sulfate per 1000 Sq. Ft.: as recommended through soil testing.
    d. Weight of Agricultural Gypsum per 1000 Sq. Ft.: as recommended through soil testing.
    e. Weight of Commercial Fertilizer per 1000 Sq. Ft.: 1200 lbs.

2.4 MULCHES

A. Organic Mulch: Free from deleterious materials and suitable as a top dressing of trees and shrubs, consisting of one of the following:

1. Type: Triple Shredded hardwood – color -black.
2. Size Range: 3 inches -thickness in planting beds.

2.5 PESTICIDES

A. General: Pesticide registered and approved by EPA, acceptable to authorities having jurisdiction, and of type recommended by manufacturer for each specific problem and as required for Project conditions and application. Do not use restricted pesticides unless authorized in writing by authorities having jurisdiction.

B. Pre-Emergent Herbicide (Selective and Non-Selective): Effective for controlling the germination or growth of weeds within planted areas at the soil level directly below the mulch layer.

C. Post-Emergent Herbicide (Selective and Non-Selective): Effective for controlling weed growth that has already germinated.

PART 3 - EXECUTION

3.1 EXAMINATION

A. Examine areas to receive plants for compliance with requirements and conditions affecting installation and performance.

1. Verify that no foreign or deleterious material or liquid such as paint, paint washout, concrete slurry, concrete layers or chunks, cement, plaster, oils, gasoline, diesel fuel, paint thinner, turpentine, tar, roofing compound, or acid has been deposited in soil within a planting area.
2. Do not mix or place soils and soil amendments in frozen, wet, or muddy conditions.
3. Suspend soil spreading, grading, and tilling operations during periods of excessive soil moisture until the moisture content reaches acceptable levels to attain the required results.
4. Uniformly moisten excessively dry soil that is not workable and which is too dusty.

B. Proceed with installation only after unsatisfactory conditions have been corrected.

C. If contamination by foreign or deleterious material or liquid is present in soil within a planting area, remove the soil and contamination as directed by Landscape Architect and replace with new planting soil.

3.2 PREPARATION

A. Protect structures, utilities, sidewalks, pavements, and other facilities and turf areas and existing plants from damage caused by planting operations.

B. Install erosion-control measures to prevent erosion or displacement of soils and discharge of soil-bearing water runoff or airborne dust to adjacent properties and walkways.

C. Lay out individual tree and shrub locations and areas for multiple plantings. Stake locations, outline areas, adjust locations when requested, and obtain Landscape Architect's acceptance of layout before excavating or planting. Make minor adjustments as required.

D. Apply antidesiccant to trees and shrubs using power spray to provide an adequate film over trunks (before wrapping), branches, stems, twigs, and foliage to protect during digging, handling, and transportation.

1. If deciduous trees or shrubs are moved in full leaf, spray with antidesiccant at nursery before moving and again two weeks after planting.

E. Wrap trees and shrubs with tree wrap over trunks, branches, stems, twigs, and foliage to protect from wind and other damage during digging, handling, and transportation.

3.3 PLANTING AREA ESTABLISHMENT

A. Loosen subgrade of planting areas to a minimum depth of 6 inches. Remove stones larger than 1 inch in any dimension and sticks, roots, rubbish, and other extraneous matter and legally dispose of them off Owner's property.

1. Apply fertilizer directly to subgrade before loosening.
2. Thoroughly blend planting soil off-site before spreading or spread topsoil, apply soil amendments and fertilizer on surface, and thoroughly blend planting soil.

    a. Delay mixing fertilizer with planting soil if planting will not proceed within a few days.
    b. Mix lime with dry soil before mixing fertilizer.

3. Spread planting soil to a depth of 6 inches but not less than required to meet finish grades after natural settlement. Do not spread if planting soil or subgrade is frozen, muddy, or excessively wet.

    a. Spread approximately one-half the thickness of planting soil over loosened subgrade. Mix thoroughly into top 2 inches of subgrade. Spread remainder of planting soil.

B. Finish Grading: Grade planting areas to a smooth, uniform surface plane with loose, uniformly fine texture. Roll and rake, remove ridges, and fill depressions to meet finish grades.

C. Before planting, obtain Landscape Architect's acceptance of finish grading; restore planting areas if eroded or otherwise disturbed after finish grading.

3.4 EXCAVATION FOR TREES AND SHRUBS

A. Planting Pits and Trenches: Excavate circular planting pits with sides sloping inward at a 45-degree angle. Excavations with vertical sides are not acceptable. Trim perimeter of bottom leaving center area of bottom raised slightly to support root ball and assist in drainage away from center. Do not further disturb base. Ensure that root ball will sit on undisturbed base soil to prevent settling. Scarify sides of planting pit smeared or smoothed during excavation.

1. Excavate approximately two times as wide as ball diameter for balled and burlapped and container-grown stock.
2. Do not excavate deeper than depth of the root ball, measured from the root flare to the bottom of the root ball.
3. If area under the plant was initially dug too deep, add soil to raise it to the correct level and thoroughly tamp the added soil to prevent settling.
4. Maintain required angles of repose of adjacent materials as shown on the Drawings. Do not excavate subgrades of adjacent paving, structures, hardscapes, or other new or existing improvements.
5. Maintain supervision of excavations during working hours.
6. Keep excavations covered or otherwise protected overnight.

B. Subsoil and topsoil removed from excavations may be used as planting soil.

C. Obstructions: Notify Landscape Architect if unexpected rock or obstructions detrimental to trees or shrubs are encountered in excavations.

D. Drainage: Notify Landscape Architect if subsoil conditions evidence unexpected water seepage or retention in tree or shrub planting pits.

3.5 ORNAMENTAL GRASSES AND GROUNDCOVER PLANTING

A. Remove stem girdling roots and kinked roots. Remove injured roots by cutting cleanly; do not break.

B. Set balled and burlapped stock plumb and in center of planting pit or trench with root flare 1 inch adjacent finish grades.

C. Set container-grown stock plumb and in center of planting pit or trench with root flare 1 inch adjacent finish grades.

1. Use planting soil for backfill.
2. Carefully remove root ball from container without damaging root ball or plant.
3. Backfill around root ball in layers, tamping to settle soil and eliminate voids and air pockets. When planting pit is approximately one-half filled, water thoroughly before placing remainder of backfill. Repeat watering until no more water is absorbed.
4. Place planting tablets in each planting pit when pit is approximately one-half filled; in amounts recommended in soil reports from soil-testing laboratory. Place tablets beside the root ball about 1 inch from root tips; do not place tablets in bottom of the hole.
5. Continue backfilling process. Water again after placing and tamping final layer of soil.

D. When planting on slopes, set the plant so the root flare on the uphill side is flush with the surrounding soil on the slope; the edge of the root ball on the downhill side will be above the surrounding soil. Apply enough soil to cover the downhill side of the root ball.

E. Groundcover must be planted in topsoil.

3.6 PLANTING AREA MULCHING

A. Mulch backfilled surfaces of planting areas and other areas indicated.
1. Organic Mulch in Shrubs and Groundcover Planting Areas: Apply 3-inch average thickness of organic mulch (triple shredded black mulch) over whole surface of planting area, and finish level with adjacent finish grades. Do not place mulch within 3 inches of trunks or stems.
2. In areas of mass plantings, including groundcovers, provide continuous mulching for entire beds.

3.7 PLANT MAINTENANCE

A. Maintain plantings by pruning, cultivating, *watering, weeding, fertilizing, mulching, restoring planting saucers, adjusting and repairing tree-stabilization devices, resetting to proper grades or vertical position, and performing other operations as required to establish healthy, viable plantings. Spray or treat as required to keep trees and shrubs free of insects and disease.

*Contractor is required to water plants a minimum thirty (30) days after substantial completion. Coordinate with owner prior to ending watering to transition watering requirements.

B. Fill in as necessary soil subsidence that may occur because of settling or other processes. Replace mulch materials damaged or lost in areas of subsidence.

C. Apply treatments as required to keep plant materials, planted areas, and soils free of pests and pathogens or disease. Use integrated pest management practices whenever possible to minimize the use of pesticides and reduce hazards. Treatments include physical controls such as hosing off foliage, mechanical controls such as traps, and biological control agents.

3.8 PESTICIDE APPLICATION

A. Apply pesticides and other chemical products and biological control agents in accordance with authorities having jurisdiction and manufacturer's written recommendations. Coordinate applications with Owner's operations and others in proximity to the Work. Notify Owner before each application is performed.

B. Pre-Emergent Herbicides (Selective and Non-Selective): Apply to tree, shrub, and ground-cover areas in accordance with manufacturer's written recommendations. Do not apply to seeded areas.

C. Post-Emergent Herbicides (Selective and Non-Selective): Apply only as necessary to treat already-germinated weeds and in accordance with manufacturer's written recommendations.

3.9 CLEANUP AND PROTECTION

A. During planting, keep adjacent paving and construction clean and work area in an orderly condition.

B. Protect plants from damage due to landscape operations and operations of other contractors and trades. Maintain protection during installation and maintenance periods. Treat, repair, or replace damaged plantings.

C. After installation and before Substantial Completion, remove nursery tags, nursery stakes, tie tape, labels, wire, burlap, and other debris from plant material, planting areas, and Project site.

3.10 DISPOSAL

A. Remove surplus soil and waste material including excess subsoil, unsuitable soil, trash, and debris and legally dispose of them off Owner's property.

END OF SECTION 329300

SECTION 329600 - TRANSPLANTING

PART 1 - GENERAL

1.1 RELATED DOCUMENTS

A. Drawings and general provisions of the Contract, including General and Supplementary Conditions and Division 01 Specification Sections, apply to this Section.

1.2 SUMMARY

A. Section includes transplanting non-nursery-grown trees by tree spade or digging and boxing.

B. Related Requirements:

1. Section 015639 "Temporary Tree and Plant Protection" for protecting, trimming, pruning, repairing, and replacing existing trees to remain that interfere with, or are affected by, execution of the Work.
2. Section 329300 "Plants" for new trees from nursery-grown sources.

1.3 DEFINITIONS

A. General: See definitions in ANSI A300 (Part 6) and in ANSI Z60.1 pertaining to field-grown trees, except as otherwise defined in this Section.

B. Caliper: Diameter of a trunk as measured by a diameter tape at a height 6 inches (150 mm) above the root flair for trees up to, and including, 4-inch (100-mm) size at this height; and as measured at a height of 12 inches (300 mm) above the root flair for trees larger than 4-inch (100-mm) size.

C. Root-Ball Depth: Measured from bottom of trunk flare to the bottom of root ball.

D. Root-Ball Width: Measured horizontally across the root ball with an approximately circular form or the least dimension for non-round root balls, not necessarily centered on the tree trunk**,** but within tolerance according to ANSI Z60.1.

E. Root Flare: Also called "trunk flare." The area at the base of the tree's stem or trunk where the stem or trunk broadens to form roots; the area of transition between the root system and the stem or trunk.

1.4 ACTION SUBMITTALS

A. Product Data: For each type of product.

B. Pruning Schedule: Written schedule prepared by arborist detailing scope and extent of pruning each tree in preparation for and subsequent to transplanting, as needed.

1. Species and size of plant.
2. Location on site plan. Include unique identifier for each.
3. Reason for pruning.
4. Seasonal limitations on pruning.
5. Preparatory Pruning: Time schedule and description of preparatory pruning to be performed.

    a. Indicate time in months preceding the extraction of the tree.
    b. Indicate diameter of root ball and depth of root pruning for each tree.

6. Description of root and crown pruning during and subsequent to transplanting.
7. Description of maintenance following pruning.

1.5 INFORMATIONAL SUBMITTALS

A. Qualification Data: For qualified tree-service firm and arborist.

B. Certification: From arborist, certifying that transplanted trees have been protected during construction and that trees were promptly and properly treated and repaired when damaged.

C. Maintenance Recommendations: From arborist, recommended procedures to be established by Owner for care and protection of trees after completing the Work.

1. Submit before completing the Work.

D. Existing Conditions: Documentation of existing trees indicated to be transplanted, which establishes preconstruction conditions that might be misconstrued as damage caused by construction activities.

1. Use sufficiently detailed color photographs or video recordings. Color shall accurately depict hue condition of foliage and bark.
2. Include drawings and notations to indicate specific wounds and damage conditions of each tree designated to be transplanted.

E. Tree-Transplanting Program: Submit before work begins.

F. Sample Warranties: For special warranties.

G. Tree-maintenance reports.

1.6 QUALITY ASSURANCE

A. Tree-Service Firm Qualifications: An experienced landscaping contractor or tree-moving firm that has successfully completed transplanting work similar to that required for this Project and that will assign an experienced, qualified arborist to Project site during execution of the Work.

1. Arborist Qualifications: Certified Arborist as certified by ISA.

1.7 DELIVERY, STORAGE, AND HANDLING

A. Packaged Materials: Deliver packaged materials in original, unopened containers showing weight, certified analysis, name and address of manufacturer, and indication of conformance with state and federal laws if applicable.

B. Bulk Materials:

1. Do not dump or store bulk materials near structures, utilities, walkways and pavements, or on existing turf areas or trees.
2. Provide erosion-control measures to prevent erosion or displacement of bulk materials, discharge of soil-bearing water runoff, and airborne dust reaching adjacent properties, water conveyance systems, or walkways.
3. Accompany each delivery with appropriate certificates.

C. Protect bark, branches, and root systems from sun scald, drying, wind burn, sweating, whipping, and other handling and tying damage. Do not bend or bind-tie trees in such a manner as to destroy their natural shape.

D. Completely cover foliage when transporting trees while they are in foliage.

E. Handle trees by root ball. Do not drop trees.

F. Move trees after preparations for planting have been completed, and install immediately. If planting is delayed more than six hours after moving, set trees in their appropriate aspect (sun, filtered sun, or shade), protect from weather and mechanical damage, and keep roots moist.

1.8 FIELD CONDITIONS

A. Field Measurements: Verify final grade elevations and final locations of trees and construction contiguous with trees by field measurements before proceeding with transplanting work. Perform transplanting only after finish grades are established.

B. Seasonal Restrictions: Transplant trees during the following in-season periods:

1. Spring: Late March to Mid-April, prior to tree leafing out.
2. Fall: Mid-September to Mid-November, after leaf drop and prior to first heavy frost.

C. Weather Limitations: Proceed with transplanting only when existing and forecasted weather conditions permit planting to be performed when beneficial and optimum results may be

obtained. Do not transplant during excessively wet or frozen conditions. Apply products during favorable weather conditions according to manufacturer's written instructions and warranty requirements.

D. Coordination with Turf Areas (Lawns): Perform transplanting before planting turf areas unless otherwise indicated.

1. When transplanting after planting turf areas, protect turf areas, and promptly repair damage caused by transplanting operations.

1.9 WARRANTY

A. Installer's Special Warranty: Tree-service firm agrees to repair or replace trees and related materials that fail within specified warranty period.

1. Failures include, but are not limited to, the following:

a. Death and unsatisfactory growth except for defects resulting from abuse, lack of adequate maintenance, or neglect by Owner, or incidents that are beyond Contractor's control.
b. Death and unsatisfactory growth is defined as more than 25 percent dead or in an unhealthy condition or failure to meet general performance requirements at end of warranty period.
c. Structural failures including trees falling or blowing over.
d. Faulty performance of materials and devices related to tree plantings including tree stabilization and watering devices.

2. Warranty Periods from Date of Transplanting Completion

a. Trees: 12 months.

3. Include the following remedial actions as a minimum:

a. Remove dead trees and trees with unsatisfactory growth at end of warranty period; replace when directed.
b. A limit of one replacement of each tree will be required except for losses or replacements due to failure to comply with requirements.
c. Replace materials and devices related to tree plantings.
d. Provide extended warranty for period equal to original warranty period, for replaced trees.

1.10 MAINTENANCE SERVICE

A. Initial Maintenance Service: Provide tree maintenance by skilled employees of tree-service firm and as required in Part 3. Begin maintenance immediately after trees are installed and continue until plantings are healthy and well established but for not less than maintenance period below.

1. Maintenance Period: 12 months from date of transplanting completion.

PART 2 - PRODUCTS

2.1 PERFORMANCE REQUIREMENTS

A. General Performance: Transplanted trees shall be healthy and resume vigorous growth within one year of transplanting without dieback due to defective extracting, handling, planting, maintenance, or other defects in the Work.

2.2 PLANTING MATERIALS

A. Backfill Soil: Excavated soil mixed with planting soil of suitable moisture content and granular texture for placing and compacting in planting pit around tree, and free of stones, roots, plants, sod, clods, clay lumps, pockets of coarse sand, concrete slurry, concrete layers or chunks, cement, plaster, building debris, and other extraneous materials harmful to plant growth.

1. Mixture: Well-blended mix of two parts excavated soil to one part planting soil.
2. Planting Soil: Planting soil as specified in Section 329300 "Plants."

2.3 TREE-STABILIZATION MATERIALS

A. Trunk-Stabilization Materials:

1. Upright and Guy Stakes: Rough-sawn, sound, new hardwood, free of knots, holes, cross grain, and other defects, 2-by-2-inch nominal (38-by-38-mm actual) by length indicated, pointed at one end.
2. Guys and Tie Wires: ASTM A641/A641M, Class 1, galvanized-steel wire, two-strand, twisted, 0.106 inch (2.7 mm) in diameter.

2.4 WATERING DEVICES

A. Slow-Release Watering Device: Standard product manufactured for drip-irrigation of plants and emptying its water contents over a period of 5 to 9 hours; manufactured from UV-light stabilized nylon-reinforced polyethylene sheet, PVC, or HDPE plastic.

2.5 MISCELLANEOUS PRODUCTS

A. Organic Mulch: Shredded hardwood as specified in Section 329300 "Plants."

B. Antidesiccant: Water-insoluble emulsion, permeable moisture retarder, film forming, for trees. Deliver in original, sealed, and fully labeled containers and mix according to manufacturer's written instructions.

C. Burlap: Non-synthetic, biodegradable.

D. Pesticides: Pesticide registered and approved by EPA, acceptable to authorities having jurisdiction, and of type recommended in writing by manufacturer for each specific problem and as required for Project conditions and application. Do not use restricted pesticides unless authorized in writing by authorities having jurisdiction.

1. Pre-Emergent Herbicide (Selective and Non-Selective): Effective for controlling the germination or growth of weeds within planted areas at the soil level directly below the mulch layer.
2. Post-Emergent Herbicide (Selective and Non-Selective): Effective for controlling weed growth that has already germinated.

E. Planting Tablets: Tightly compressed chip type, long-lasting, slow-release, commercial-grade planting fertilizer in tablet form. Tablets shall break down with soil bacteria, converting nutrients into a form that can be absorbed by plant roots.

1. Size: 21-gram tablets.
2. Nutrient Composition: 20 percent nitrogen, 10 percent phosphorous, and 5 percent potassium, by weight plus micronutrients.

F. Wood Preservative Treatment by Pressure Process: AWPA U1; Use Category UC4a, using preservative chemicals acceptable to authorities having jurisdiction and containing no arsenic or chromium.

PART 3 - EXECUTION

3.1 EXAMINATION

A. Erosion and Sedimentation Control: Examine the site to verify that temporary erosion- and sedimentation-control measures are in place. Verify that flows of water redirected from construction areas or generated by construction activity do not enter or cross transplanting areas.

B. For the record, prepare written report, endorsed by arborist, listing conditions detrimental to transplanting work and tree protection and health.

C. Proceed with transplanting only after unsatisfactory conditions have been corrected.

3.2 PREPARATION

A. Protect structures, utilities, sidewalks, pavements, other facilities, turf areas, and other plants and planting areas from damage caused by transplanting operations.

B. Utility Locator Service: Notify "PA One Call" for area where Project is located before beginning excavation.

C. Locate and clearly identify trees for transplanting. Flag each tree at 54 inches (1372 mm) above the ground.

D. Lay out individual transplant locations as shown on the drawings. Stake locations, adjust locations when requested, and obtain Architect's acceptance of layout before transplanting. Make minor adjustments as required.

3.3 PREPARATORY PRUNING

A. Root Pruning: Perform preparatory root pruning under direction of arborist as far in advance of extracting each tree as the Project Schedule allows.

1. Dig trench by hand or with tree spade around perimeter of tree at indicated root-ball width to the depth of the root system. Do not use a backhoe or other equipment that rips, tears, or pulls roots.
2. Root-Ball Width: Minimum 9 inches (229 mm) of root-ball diameter, or least dimension for non-round root balls, for each inch (25 mm) of tree caliper being transplanted.
3. If encountering large, main lateral roots, expose roots beyond excavation limits as required to bend and redirect them without breaking.
4. Use narrow-tine spading forks to comb soil to expose roots with minimal damage to root system.
5. Cut exposed roots manually with sharp pruning instruments; do not break, tear, chop, or slant the cuts. Do not use a backhoe or other equipment that rips, tears, or pulls roots.
6. Do not paint or apply sealants on cut root ends.
7. Backfill trench with excavated soil.

B. Crown Pruning (Tip Pruning):

1. Do not perform preparatory crown pruning (tip pruning).

3.4 EXCAVATION AND PLANTING EQUIPMENT

A. Tree Spade: Track-mounted mechanized tree mover; sized according to manufacturer's size recommendation for each tree being transplanted.

3.5 EXCAVATING PLANTING PITS

A. General: Excavate under supervision of the arborist.

1. Excavate planting pits or trenches with sides sloping. Trim perimeter of bottom leaving center area of bottom raised slightly to support root ball and assist in drainage away from center. Do not further disturb base. Ensure that root ball will sit on undisturbed base soil. Scarify sides of planting pit smeared or smoothed during excavation.
2. Excavate approximately two times as wide as root ball.
3. Keep excavations covered or otherwise protected until replanting trees.

B. Subsoil and topsoil removed from excavations may be used as planting soil.

C. Obstructions: Notify Architect if unexpected rock or obstructions detrimental to trees are encountered in excavations.

3.6 EXTRACTING TREES

A. General: Extract trees under supervision of the arborist.

B. Orientation Marking: Mark the north side of each tree with non-permanent paint before extracting.

C. Root-Ball Width: Minimum 10 inches (250 mm) of root-ball diameter, or least dimension for non-round root balls, for each inch (25 mm) of tree caliper being transplanted.

D. Root-Ball Depth: As determined by the arborist for each species and size of tree and for site conditions at original and planting locations.

E. Digging:

1. Dig and clear a pit by hand or with tree spade to the depth of the root system. Do not use a backhoe or other equipment that rips, tears, or pulls roots.
2. Use narrow-tine spading forks to comb soil to expose roots with minimal damage to root system.
3. If encountering large, main lateral roots, expose roots beyond excavation limits as required to bend and redirect them without breaking.
4. Cut exposed roots manually with sharp pruning instruments; do not break, tear, chop, or slant the cuts. Do not paint or apply sealants on cut root ends.
5. Temporarily support and protect exposed roots from damage until they are permanently redirected and covered with soil. Cover roots with burlap and keep them moist until planted.

F. Extracting with Tree Spade: Use the same tree spade to extract the tree as will be used to transport and plant the tree.

1. Do not use tree spade to move trees larger than the manufacturer's maximum size recommendation for the tree spade being used.
2. When extracting the tree, center the trunk within the tree spade and move tree with a solid ball of earth.

3.7 PLANTING

A. Planting Standard: Perform planting according to ANSI A300 (Part 6) unless otherwise indicated.

B. Ensure that root flare is visible after planting.

C. Remove injured roots by cutting cleanly; do not break. Do not paint or apply sealants on cut root ends.

D. Orientation: Position the tree so that its north side, marked before extracting, is facing north in its new location.

E. Set tree plumb and in center of planting pit with top of root flare 2 inches (50 mm) above adjacent finish grades.

1. Use specified backfill soil for backfill.
2. If area under the tree was initially dug too deep, add backfill to raise it to the correct level and thoroughly tamp the added soil to prevent settling.
3. After placing some backfill around root ball to stabilize plant, begin backfilling.
4. Backfill around root ball in layers, tamping to settle soil and eliminate voids and air pockets. When planting pit is approximately one-half filled, water thoroughly before placing remainder of backfill. Repeat watering until no more water is absorbed.
5. Redirect exposed root ends downward in backfill areas where possible. Hand-expose roots as required to bend and redirect them without breaking. If encountered immediately adjacent to location of new construction and redirection is not practical, cut roots approximately 3 inches (75 mm) back from new construction and as required for root pruning.
6. Place planting tablets in each planting pit when pit is approximately one-half filled; in amounts recommended by arborist. Place tablets beside the root ball about 1 inch (25 mm) from root tips; do not place tablets in bottom of the hole.
7. Continue backfilling process. Water again after placing and tamping final layer of soil.

F. Planting with Tree Spade: Use the same tree spade for planting as was used to extract and transport the tree. Do not use tree spade for trees larger than the manufacturer's maximum size recommendation for the tree spade being used.

G. Slopes: When planting on slopes, set the tree so the root flare on the uphill side is flush with the surrounding soil on the slope; the edge of the root ball on the downhill side will be above the surrounding soil. Apply enough soil to cover the downhill side of the root ball.

3.8 CROWN PRUNING

A. Prune branches as directed by arborist.

1. Prune to remove only injured, broken, dying, or dead branches. Do not prune for shape.
2. Do not remove or reduce living branches to compensate for root loss caused by cutting root system or to improve natural tree form.
3. Pruning Standards: Perform pruning according to ANSI A300 (Part 1).

B. Unless otherwise directed by arborist and acceptable to Architect, do not cut tree leaders.

C. Cut branches with sharp pruning instruments; do not break or chop.

D. Do not paint or apply sealants to wounds.

E. Provide subsequent maintenance during Contract period as recommended by arborist.

F. Dispose of removed branches legally off-site.

3.9 TREE STABILIZATION

A. Trunk Stabilization by Upright Staking and Tying: Install trunk stabilization as follows unless otherwise indicated on Drawings or directed by arborist.

1. Upright Staking and Tying: Stake only as required to prevent wind tip out. Use a minimum of **three** stakes of length required to penetrate at least 18 inches (450 mm) below bottom of backfilled excavation and to extend one-third of trunk height above grade. Set stakes vertical and space to avoid penetrating root balls or root masses.
2. Support trees with two strands of tie wire, connected to the brass grommets of tree-tie webbing at contact points with tree trunk. Allow enough slack to avoid rigid restraint of tree.

B. Trunk Stabilization by Staking and Guying: Install trunk stabilization as follows unless otherwise indicated on Drawings **or directed by arborist**.

1. Site-Fabricated Staking-and-Guying Method: Install no fewer than three guys spaced equally around tree.

   a. Securely attach guys to stakes 30 inches (760 mm) long, driven to grade. Adjust spacing to avoid penetrating root balls or root masses. Provide turnbuckle for each guy wire and tighten securely.
   b. For trees more than 6 inches (150 mm) in caliper, anchor guys to wood deadmen buried at least 36 inches (900 mm) below grade. Provide turnbuckle for each guy wire and tighten securely.
   c. Support trees with guy cable or multiple strands of tie wire, connected to the brass grommets of tree-tie webbing at contact points with tree trunk and reaching to a turnbuckle. Allow enough slack to avoid rigid restraint of tree.
   d. Attach flags to each guy wire, 30 inches (760 mm) above finish grade.

3.10 MULCHING

A. Organic Mulch: Apply 3-inch (75-mm) average thickness of organic mulch extending 12 inches (300 mm) beyond edge of individual planting pit, and finish level with adjacent finish grades. Do not place mulch within 3 inches (75 mm) of trunks or stems.

3.11 INSTALLING SLOW-RELEASE WATERING DEVICE

A. Provide one device for each tree, unless otherwise recommended by manufacturer.

B. Place device on top of the mulch at base of tree and fill with water according to manufacturer's written instructions.

3.12 TREE MAINTENANCE

A. Perform tree maintenance as recommended by arborist. Maintain arborist observation of transplanting work.

B. Maintain trees by pruning, cultivating, watering, weeding, fertilizing, mulching, restoring planting saucers, adjusting and repairing tree-stabilization devices, resetting to proper grades or vertical position, and performing other operations as required to establish healthy, viable plantings. Treat as required to keep trees free of insects and disease.

C. From time of tree extraction measure soil moisture adjacent to edge of each root ball weekly. Record findings and weather conditions.

D. Fill areas of soil subsidence with backfill soil. Replenish mulch materials damaged or lost in areas of subsidence.

E. Apply treatments as required to keep tree materials, planted areas, and soils free of pests and pathogens or disease. Use integrated pest management practices whenever possible to minimize the use of pesticides and reduce hazards. Treatments include physical controls such as hosing off foliage, mechanical controls such as traps, and biological control agents.

F. Pesticide Application: Apply pesticides and other chemical products and biological control agents in accordance with authorities having jurisdiction and manufacturer's written instructions. Coordinate applications with Owner's operations and others in proximity to the Work. Notify Owner before each application is performed.

1. Pre-Emergent Herbicides (Selective and Non-Selective): Apply in accordance with manufacturer's written instructions. Do not apply to seeded areas.
2. Post-Emergent Herbicides (Selective and Non-Selective): Apply only as necessary to treat already-germinated weeds and in accordance with manufacturer's written instructions.

3.13 REPAIR AND REPLACEMENT

A. General: Repair or replace transplanted trees and other plants indicated to remain or be relocated that are damaged by construction operations, in a manner recommended by the arborist and approved by Architect.

1. Submit details of proposed pruning and repairs.
2. Perform repairs of damaged trunks, branches, and roots within 24 hours according to arborist's written instructions.
3. Replace trees and other plants that cannot be repaired and restored to full-growth status, as determined by Architect.

B. Remove and replace trees that are more than 25 percent dead or in an unhealthy condition before the end of the corrections period or are damaged during construction operations that Architect determines are incapable of restoring to normal growth pattern.

1. Provide new trees of same size as those being replaced for each tree of 6 inches (150 mm) or smaller in caliper size.
2. Species of Replacement Trees: Same species being replaced.

3.14 CLEANUP AND PROTECTION

A. During transplanting, keep adjacent paving and construction clean and work area in an orderly condition.

B. Protect trees from damage due to transplanting operations and operations of other contractors and trades. Maintain protection during transplanting and maintenance periods. Treat, repair, or replace damaged plantings.

C. After planting and before Substantial Completion, remove tags, markings, tie tape, labels, wire, burlap, and other debris from transplanted trees, planting areas, and Project site.

3.15 DISPOSAL OF SURPLUS AND WASTE MATERIALS

A. Except for materials indicated to be recycled or re-used on-site, remove surplus soil, excess excavated material, waste materials, displaced plants, trash, and debris, and legally dispose of them off Owner's property.

END OF SECTION 329600

SECTION 334100 - STORM UTILITY DRAINAGE PIPING

PART 1 – GENERAL

1.1 RELATED DOCUMENTS

A. Drawings and general provisions of the Contract, including General and Supplementary Conditions and Division 1 Specification Sections, apply to this Section.

1.2 SUMMAR

A. Section Includes:
   1. PE Pipe and fittings.
   2. PVC Pipe and fittings
   3. Nonpressure pipe couplings.
   4. Stormwater inlets and manholes

1.3 SUBMITTALS

A. Product Data: For each type of product indicated.
B. Shop Drawings:
   1. Stormwater inlets and manholes. Include plans, elevations, sections, details, frames, covers, and grates.

C. Coordination Drawings: Show pipe sizes, locations, and elevations. Show other piping in same trench and clearances from storm drainage system piping. Indicate interface and spatial relationship between manholes, piping, and proximate structures.
D. Field quality-control reports.

1.4 DELIVERY, STORAGE, AND HANDLING

A. Do not store impervious liners, plastic manholes, pipe, and fittings in direct sunlight.
B. Protect pipe, pipe fittings, and seals from dirt and damage.
C. Handle stormwater inlets and manholes according to manufacturer's written rigging instructions.

1.5 PROJECT CONDITIONS

A. Interruption of Existing Storm Drainage Service: Do not interrupt service to facilities occupied by Owner or others unless permitted under the following conditions and then only after arranging to provide temporary service according to requirements indicated:

   1. Notify Architect no fewer than seven (7) days in advance of proposed interruption of

service.

2. Do not proceed with interruption of service without Architect's written permission.

PART 2 - PRODUCTS

2.1 PE PIPE AND FITTINGS

A. Corrugated PE Drainage Pipe and Fittings 4" to 10": N-12 WT IB pipe (or approved equal) per AASHTO M252, Type S, with smooth waterway for coupling joints. All drainage pipes and fittings shall provide a watertight system.

1. Pipe shall be joined with N-12 WT IB (or approved equal) meeting the requirements of AASHTO M252, AASHTO M294, or ASTM F2306. Bell and spigot connections shall utilize a spun-on or welded bell and valley or saddle gasket meeting the watertight joint performance requirements of AASHTO M252, AASHTO M294, or ASTM F2306.

B. Corrugated PE Pipe and Fittings 12" to 60": N-12 WT IB pipe (or approved equal) per AASHTO M 294, Type S, with smooth waterway for coupling joints.

1. Pipe shall be joined with N-12 WT IB (or approved equal) meeting the requirements of AASHTO M252, AASHTO M294, or ASTM F2306. Bell and spigot connections shall utilize a spun-on or welded bell and valley or saddle gasket meeting the watertight joint performance requirements of AASHTO M252, AASHTO M294, or ASTM F2306.

C. 4 inch through 60 inch shall be watertight according to the requirements of ASTM D3212. Gaskets shall meet the requirements of ASTM F477. Gaskets shall be installed by the pipe manufacturer and covered with a removable, protective wrap to ensure the gasket is free from debris. A joint lubricant available from the manufacturer shall be used on the gasket and bell during assembly.

D. 12 inch through 60 inch diameters shall have a reinforced bell with a polymer composite band. The bell tolerance device shall be installed by the manufacturer.

E. Field Pipe and Joint Performance - To assure watertightness, field performance shall be high-density polyethylene conforming with the minimum requirements of cell classification 424420C for 4-through 10-inch diameters, and 435400C for 12-through 60-inch diameters, as defined and described in the latest version of ASTM D3350, except that carbon black content should not exceed 4%. The 12-through 60-inch virgin pipe material shall comply with the notched constant ligament-stress (NCLS) test as specified in Sections 9.5 and 5.1 AASHTO M294 and ASTM F2306 respectively.

2.2 PVC PIPE AND FITTINGS

A. PVC Type PSM Sewer Piping:

1. Pipe: ASTM D 3034, SDR 35, PVC Type PSM sewer pipe with bell-and-spigot ends for gasketed joints.
2. Fittings: ASTM D 3034, PVC with bell ends.
3. Gaskets: ASTM F 477, elastomeric seals.

B. Perforated PVC Sewer Pipe and Fittings: ASTM D 2729, bell-and-spigot ends, for loose joints

2.3 NONPRESSURE TRANSITION COUPLINGS

A. Comply with ASTM C 1173, elastomeric, sleeve-type, reducing or transition coupling, for joining underground nonpressure piping. Include ends of same sizes as piping to be joined, and corrosion-resistant-metal tension band and tightening mechanism on each end.

B. Sleeve Materials:

1. For Plastic Pipes: ASTM F 477, elastomeric seal or ASTM D 5926, PVC.
2. For Dissimilar Pipes: ASTM D 5926, PVC or other material compatible with pipe materials being joined.

C. Shielded, Flexible Couplings:

1. Manufacturers: Subject to compliance with requirements, available manufacturers offering products that may be incorporated into the Work include, but are not limited to, the following:

   a. Cascade Waterworks Mfg.
   b. Dallas Specialty & Mfg. Co.
   c. Mission Rubber Company; a division of MCP Industries, Inc.

2. Description: ASTM C 1460, elastomeric or rubber sleeve with full-length, corrosion-resistant outer shield and corrosion-resistant-metal tension band and tightening mechanism on each end.

2.4 CONCRETE

A. General: Cast-in-place concrete according to ACI 318, ACI 350/350R, and the following:

1. Cement: ASTM C 150, Type II.
2. Fine Aggregate: ASTM C 33, sand.
3. Coarse Aggregate: ASTM C 33, crushed gravel.
4. Water: Potable.

B. Portland Cement Design Mix: 4000 psi minimum, with 0.45 maximum water/cementitious materials ratio.

1. Reinforcing Fabric: ASTM A 185/A 185M, steel, welded wire fabric, plain.
2. Reinforcing Bars: ASTM A 615/A 615M, Grade 60 (420 MPa) deformed steel.

C. Ballast and Pipe Supports: Portland cement design mix, 3000 psi minimum, with 0.58 maximum water/cementitious materials ratio.

1. Reinforcing Fabric: ASTM A 185/A 185M, steel, welded wire fabric, plain.
2. Reinforcing Bars: ASTM A 615/A 615M, Grade 60 (420 MPa) deformed steel.

2.5 STORMWATER INLETS

A. Standard Precast Concrete Inlets

1. Description: ASTM C478 (ASTM C478M), precast, reinforced concrete, of depth indicated, with provision for sealant joints.
2. Base Section: 6-inch (150-mm) minimum thickness for floor slab and 4-inch (102-mm) minimum thickness for walls and base riser section, and separate base slab or base section with integral floor.
3. Riser Sections: 4-inch (102-mm) minimum thickness, 48-inch (1200-mm) diameter, and lengths to provide depth indicated.
4. Top Section: Eccentric-cone type unless concentric-cone or flat-slab-top type is indicated. Top of cone of size that matches grade rings.
5. Joint Sealant: ASTM C990 (ASTM C990M), bitumen or butyl rubber.
6. Adjusting Rings: Interlocking rings with level or sloped edge in thickness and shape matching catch basin frame and grate. Include sealant recommended by ring manufacturer.
7. Grade Rings: Include two or three reinforced-concrete rings, of 6- to 9-inch (150- to 225-mm) total thickness, that match 24-inch- (610-mm-) diameter frame and grate.
8. Steps: ASTM A615/A615M, deformed, 1/2-inch (13-mm) steel reinforcing rods encased in ASTM D4101, PP, wide enough to allow worker to place both feet on one step and designed to prevent lateral slippage off step. Cast or anchor steps into sidewalls at 12- to 16-inch (300- to 400-mm) intervals.
9. Pipe Connectors: ASTM C923 (ASTM C923M), resilient, of size required, for each pipe connecting to base section.

B. Frames and Grates: Heavy duty, according to PennDOT standards.

2.6 MANHOLES

A. Standard Precast Concrete Manholes:

1. Description: ASTM C 478, precast, reinforced concrete, of depth indicated, with provision for sealant joints.
2. Diameter: 48 inches minimum unless otherwise indicated.
3. Ballast: Increase thickness of precast concrete sections or add concrete to base section as required to prevent flotation.
4. Base Section: 6-inch minimum thickness for floor slab and 4-inch minimum thickness for walls and base riser section, and separate base slab or base section with integral floor.
5. Riser Sections: 4-inch minimum thickness, and lengths to provide depth indicated.
6. Top Section: Eccentric-cone type unless concentric-cone or flat-slab-top type is indicated, and top of cone of size that matches grade rings.
7. Joint Sealant: ASTM C 990, bitumen or butyl rubber.
8. Resilient Pipe Connectors: ASTM C 923, cast or fitted into manhole walls, for each pipe connection.
9. Steps: ASTM A 615/A 615M, deformed, 1/2-inch steel reinforcing rods encased in ASTM D 4101, PP, wide enough to allow worker to place both feet on one step and designed to prevent lateral slippage off step. Cast or anchor steps into sidewalls at 12- to 16-inch intervals. Omit steps if total depth from floor of manhole to finished grade is less than 60 inches.
10. Grade Rings: Reinforced-concrete rings, 6- to 9-inch total thickness, to match diameter

of manhole frame and cover, and height as required to adjust manhole frame and cover to indicated elevation and slope.

B. Manhole Frames and Covers:

1. Description: Ferrous; 24-inch ID by 7- to 9-inch riser with 4-inch- minimum width flange and 26-inch- diameter cover. Include indented top design with lettering cast into cover, using wording equivalent to "STORM SEWER."
2. Material: ASTM A 536, Grade 60-40-18 ductile iron unless otherwise indicated.

PART 3 - EXECUTION

3.1 EARTHWORK

A. Excavation, trenching, and backfilling are specified in Section 31 20 00 "Earth Moving."

3.2 PIPING INSTALLATION

A. General Locations and Arrangements: Drawing plans and details indicate general location and arrangement of underground storm drainage piping. Location and arrangement of piping layout take into account design considerations. Install piping as indicated, to extent practical. Where specific installation is not indicated, follow piping manufacturer's written instructions.
B. Install piping beginning at low point, true to grades and alignment indicated with unbroken continuity of invert. Place bell ends of piping facing upstream. Install gaskets, seals, sleeves, and couplings according to manufacturer's written instructions for use of lubricants, cements, and other installation requirements.
C. Install proper size increasers, reducers, and couplings where different sizes or materials of pipes and fittings are connected. Reducing size of piping in direction of flow is prohibited.
D. When installing pipe under streets or other obstructions that cannot be disturbed, use pipe-jacking process of microtunneling.
E. Install gravity-flow, nonpressure drainage piping according to the following:

1. Install piping pitched down in direction of flow.
2. Install PE corrugated sewer piping according to ASTM D 2321.
3. Install PVC sewer piping according to ASTM D 2321 and ASTM F 1668.

3.3 PIPE JOINT CONSTRUCTION

A. Join gravity-flow, nonpressure drainage piping according to the following:

1. Join corrugated PE piping according to ASTM D 3212 for push-on joints.
2. Join PVC sewer piping according to ASTM D 2321 and ASTM D 3034 for elastomeric-seal joints or ASTM D 3034 for elastomeric-gasketed joints.
3. Join dissimilar pipe materials with nonpressure-type flexible couplings.

3.4 STORMWATER INLET INSTALLATION

A. Construct inlet head walls, aprons, and sides of reinforced concrete, as indicated.
B. Construct flow channels in inlets.

C. Trim pipes to inside face of structures.

3.5 CONCRETE PLACEMENT

A. Place cast-in-place concrete according to ACI 318.

3.6 MANHOLE INSTALLATION

A. General: Install manholes, complete with appurtenances and accessories indicated.
B. Install precast concrete manhole sections with sealants in accordance with ASTM C891.
C. Where specific manhole construction is not indicated, follow manhole manufacturer's written instructions.
D. Set tops of frames and covers flush with finished surface of manholes.

3.7 IDENTIFICATION

A. Materials and their installation are specified in Section 312000 "Earth Moving." Arrange for installation of green warning tape directly over piping and at outside edge of underground structures.

1. Use warning tape or detectable warning tape over ferrous piping.
2. Use detectable warning tape over nonferrous piping and over edges of underground structures.

3.8 FIELD QUALITY CONTROL

A. Inspect interior of piping to determine whether line displacement or other damage has occurred. Inspect after approximately 24 inches of backfill is in place, and again at completion of Project.
1. Defects requiring correction include the following:

a. Alignment: Less than full diameter of inside of pipe is visible between structures.
b. Deflection: Flexible piping with deflection that prevents passage of ball or cylinder of size not less than 92.5 percent of piping diameter.
c. Damage: Crushed, broken, cracked, or otherwise damaged piping.
d. Infiltration: Water leakage into piping.
e. Exfiltration: Water leakage from or around piping.

2. Replace defective piping using new materials, and repeat inspections until defects are within allowances specified.
3. Re-inspect and repeat procedure until results are satisfactory.

3.9 CLEANING

A. Clean interior of piping of dirt and superfluous materials. Flush with water.

END OF SECTION 334100

SECTION 334200 - STORM UTILITY DRAINAGE PIPING

PART 1 - GENERAL

1.1 RELATED DOCUMENTS

A. Drawings and general provisions of the Contract, including General and Supplementary Conditions and Division 1 Specification Sections, apply to this Section.

1.2 SUMMARY

A. Section Includes:

1. PE Pipe and fittings.
2. PVC Pipe and fittings
3. Nonpressure pipe couplings.
4. Stormwater inlets and manholes.

1.3 SUBMITTALS

A. Product Data: For each type of product indicated.

B. Shop Drawings:
1. Stormwater inlets and manholes. Include plans, elevations, sections, details, frames, covers, and grates.

C. Coordination Drawings: Show pipe sizes, locations, and elevations. Show other piping in same trench and clearances from storm drainage system piping. Indicate interface and spatial relationship between manholes, piping, and proximate structures.

D. Field quality-control reports.

1.4 DELIVERY, STORAGE, AND HANDLING

A. Do not store impervious liners, plastic manholes, pipe, and fittings in direct sunlight.

B. Protect pipe, pipe fittings, and seals from dirt and damage.

C. Handle stormwater inlets and manholes according to manufacturer's written rigging instructions.

1.5 PROJECT CONDITIONS

A. Interruption of Existing Storm Drainage Service: Do not interrupt service to facilities occupied by Owner or others unless permitted under the following conditions and then only after arranging to provide temporary service according to requirements indicated:

1. Notify Architect no fewer than seven (7) days in advance of proposed interruption of service.
2. Do not proceed with interruption of service without Architect's written permission.

PART 2 - PRODUCTS

2.1 PE PIPE AND FITTINGS

A. Corrugated PE Drainage Pipe and Fittings 4" to 10": N-12 WT IB pipe (or approved equal) per AASHTO M252, Type S, with smooth waterway for coupling joints. <u>All drainage pipes and fittings shall provide a watertight system.</u>

1. Pipe shall be joined with N-12 WT IB (or approved equal) meeting the requirements of AASHTO M252, AASHTO M294, or ASTM F2306. Bell and spigot connections shall utilize a spun-on or welded bell and valley or saddle gasket meeting the watertight joint performance requirements of AASHTO M252, AASHTO M294, or ASTM F2306.

B. Corrugated PE Pipe and Fittings 12" to 60": N-12 WT IB pipe (or approved equal) per AASHTO M 294, Type S, with smooth waterway for coupling joints.

1. Pipe shall be joined with N-12 WT IB (or approved equal) meeting the requirements of AASHTO M252, AASHTO M294, or ASTM F2306. Bell and spigot connections shall utilize a spun-on or welded bell and valley or saddle gasket meeting the watertight joint performance requirements of AASHTO M252, AASHTO M294, or ASTM F2306.

C. 4 inch through 60 inch shall be watertight according to the requirements of ASTM D3212. Gaskets shall meet the requirements of ASTM F477. Gaskets shall be installed by the pipe manufacturer and covered with a removable, protective wrap to ensure the gasket is free from debris. A joint lubricant available from the manufacturer shall be used on the gasket and bell during assembly.

D. 12 inch through 60 inch diameters shall have a reinforced bell with a polymer composite band. The bell tolerance device shall be installed by the manufacturer.

E. Field Pipe and Joint Performance - To assure watertightness, field performance shall be high-density polyethylene conforming with the minimum requirements of cell classification 424420C for 4-through 10-inch diameters, and 435400C for 12-through 60-inch diameters, as defined and described in the latest version of ASTM D3350, except that carbon black content should not exceed 4%. The 12-through 60-inch virgin pipe material shall comply with the notched constant ligament-stress (NCLS) test as specified in Sections 9.5 and 5.1 AASHTO M294 and ASTM F2306 respectively.

2.2 PVC PIPE AND FITTINGS

A. PVC Type PSM Sewer Piping:

1. Pipe: ASTM D 3034, SDR 35, PVC Type PSM sewer pipe with bell-and-spigot ends for gasketed joints.
2. Fittings: ASTM D 3034, PVC with bell ends.
3. Gaskets: ASTM F 477, elastomeric seals.

B. Perforated PVC Sewer Pipe and Fittings: ASTM D 2729, bell-and-spigot ends, for loose joints

2.3 NONPRESSURE TRANSITION COUPLINGS

A. Comply with ASTM C 1173, elastomeric, sleeve-type, reducing or transition coupling, for joining underground nonpressure piping. Include ends of same sizes as piping to be joined, and corrosion-resistant-metal tension band and tightening mechanism on each end.

B. Sleeve Materials:

1. For Plastic Pipes: ASTM F 477, elastomeric seal or ASTM D 5926, PVC.
2. For Dissimilar Pipes: ASTM D 5926, PVC or other material compatible with pipe materials being joined.

C. Shielded, Flexible Couplings:

1. Manufacturers: Subject to compliance with requirements, available manufacturers offering products that may be incorporated into the Work include, but are not limited to, the following:

   a. Cascade Waterworks Mfg.
   b. Dallas Specialty & Mfg. Co.
   c. Mission Rubber Company; a division of MCP Industries, Inc.

2. Description: ASTM C 1460, elastomeric or rubber sleeve with full-length, corrosion-resistant outer shield and corrosion-resistant-metal tension band and tightening mechanism on each end.

2.4 CONCRETE

A. General: Cast-in-place concrete according to ACI 318, ACI 350/350R, and the following:

1. Cement: ASTM C 150, Type II.
2. Fine Aggregate: ASTM C 33, sand.
3. Coarse Aggregate: ASTM C 33, crushed gravel.
4. Water: Potable.

B. Portland Cement Design Mix: 4000 psi minimum, with 0.45 maximum water/cementitious materials ratio.

1. Reinforcing Fabric: ASTM A 185/A 185M, steel, welded wire fabric, plain.
2. Reinforcing Bars: ASTM A 615/A 615M, Grade 60 (420 MPa) deformed steel.

C. Ballast and Pipe Supports: Portland cement design mix, 3000 psi minimum, with 0.58 maximum water/cementitious materials ratio.

1. Reinforcing Fabric: ASTM A 185/A 185M, steel, welded wire fabric, plain.
2. Reinforcing Bars: ASTM A 615/A 615M, Grade 60 (420 MPa) deformed steel.

2.5 STORMWATER INLETS

A. Standard Precast Concrete Inlets

1. Description: ASTM C478 (ASTM C478M), precast, reinforced concrete, of depth indicated, with provision for sealant joints.
2. Base Section: 6-inch (150-mm) minimum thickness for floor slab and 4-inch (102-mm) minimum thickness for walls and base riser section, and separate base slab or base section with integral floor.
3. Riser Sections: 4-inch (102-mm) minimum thickness, 48-inch (1200-mm) diameter, and lengths to provide depth indicated.
4. Top Section: Eccentric-cone type unless concentric-cone or flat-slab-top type is indicated. Top of cone of size that matches grade rings.
5. Joint Sealant: ASTM C990 (ASTM C990M), bitumen or butyl rubber.
6. Adjusting Rings: Interlocking rings with level or sloped edge in thickness and shape matching catch basin frame and grate. Include sealant recommended by ring manufacturer.
7. Grade Rings: Include two or three reinforced-concrete rings, of 6- to 9-inch (150- to 225-mm) total thickness, that match 24-inch- (610-mm-) diameter frame and grate.
8. Steps: ASTM A615/A615M, deformed, 1/2-inch (13-mm) steel reinforcing rods encased in ASTM D4101, PP, wide enough to allow worker to place both feet on one step and designed to prevent lateral slippage off step. Cast or anchor steps into sidewalls at 12- to 16-inch (300- to 400-mm) intervals.
9. Pipe Connectors: ASTM C923 (ASTM C923M), resilient, of size required, for each pipe connecting to base section.

B. Frames and Grates: Heavy duty, according to PennDOT standards.

2.6 MANHOLES

A. Standard Precast Concrete Manholes:

1. Description: ASTM C 478, precast, reinforced concrete, of depth indicated, with provision for sealant joints.
2. Diameter: 48 inches minimum unless otherwise indicated.
3. Ballast: Increase thickness of precast concrete sections or add concrete to base section as required to prevent flotation.

4. Base Section: 6-inch minimum thickness for floor slab and 4-inch minimum thickness for walls and base riser section, and separate base slab or base section with integral floor.
5. Riser Sections: 4-inch minimum thickness, and lengths to provide depth indicated.
6. Top Section: Eccentric-cone type unless concentric-cone or flat-slab-top type is indicated, and top of cone of size that matches grade rings.
7. Joint Sealant: ASTM C 990, bitumen or butyl rubber.
8. Resilient Pipe Connectors: ASTM C 923, cast or fitted into manhole walls, for each pipe connection.
9. Steps: ASTM A 615/A 615M, deformed, 1/2-inch steel reinforcing rods encased in ASTM D 4101, PP, wide enough to allow worker to place both feet on one step and designed to prevent lateral slippage off step. Cast or anchor steps into sidewalls at 12- to 16-inch intervals. Omit steps if total depth from floor of manhole to finished grade is less than 60 inches.
10. Grade Rings: Reinforced-concrete rings, 6- to 9-inch total thickness, to match diameter of manhole frame and cover, and height as required to adjust manhole frame and cover to indicated elevation and slope.

B. Manhole Frames and Covers:

1. Description: Ferrous; 24-inch ID by 7- to 9-inch riser with 4-inch- minimum width flange and 26-inch- diameter cover. Include indented top design with lettering cast into cover, using wording equivalent to "STORM SEWER."
2. Material: ASTM A 536, Grade 60-40-18 ductile iron unless otherwise indicated.

PART 3 - EXECUTION

3.1 EARTHWORK

A. Excavation, trenching, and backfilling are specified in Section 31 20 00 "Earth Moving."

3.2 PIPING INSTALLATION

A. General Locations and Arrangements: Drawing plans and details indicate general location and arrangement of underground storm drainage piping. Location and arrangement of piping layout take into account design considerations. Install piping as indicated, to extent practical. Where specific installation is not indicated, follow piping manufacturer's written instructions.

B. Install piping beginning at low point, true to grades and alignment indicated with unbroken continuity of invert. Place bell ends of piping facing upstream. Install gaskets, seals, sleeves, and couplings according to manufacturer's written instructions for use of lubricants, cements, and other installation requirements.

C. Install proper size increasers, reducers, and couplings where different sizes or materials of pipes and fittings are connected. Reducing size of piping in direction of flow is prohibited.

D. When installing pipe under streets or other obstructions that cannot be disturbed, use pipe-jacking process of microtunneling.

E. Install gravity-flow, nonpressure drainage piping according to the following:

1. Install piping pitched down in direction of flow.
2. Install PE corrugated sewer piping according to ASTM D 2321.
3. Install PVC sewer piping according to ASTM D 2321 and ASTM F 1668.

3.3 PIPE JOINT CONSTRUCTION

A. Join gravity-flow, nonpressure drainage piping according to the following:

1. Join corrugated PE piping according to ASTM D 3212 for push-on joints.
2. Join PVC sewer piping according to ASTM D 2321 and ASTM D 3034 for elastomeric-seal joints or ASTM D 3034 for elastomeric-gasketed joints.
3. Join dissimilar pipe materials with nonpressure-type flexible couplings.

3.4 STORMWATER INLET INSTALLATION

A. Construct inlet head walls, aprons, and sides of reinforced concrete, as indicated.

B. Construct flow channels in inlets.

C. Trim pipes to inside face of structures.

3.5 CONCRETE PLACEMENT

A. Place cast-in-place concrete according to ACI 318.

3.6 MANHOLE INSTALLATION

A. General: Install manholes, complete with appurtenances and accessories indicated.

B. Install precast concrete manhole sections with sealants in accordance with ASTM C891.

C. Where specific manhole construction is not indicated, follow manhole manufacturer's written instructions.

D. Set tops of frames and covers flush with finished surface of manholes.

3.7 IDENTIFICATION

A. Materials and their installation are specified in Section 312000 "Earth Moving." Arrange for installation of green warning tape directly over piping and at outside edge of underground structures.

1. Use warning tape or detectable warning tape over ferrous piping.
2. Use detectable warning tape over nonferrous piping and over edges of underground structures.

3.8 FIELD QUALITY CONTROL

A. Inspect interior of piping to determine whether line displacement or other damage has occurred. Inspect after approximately 24 inches of backfill is in place, and again at completion of Project.

1. Defects requiring correction include the following:

    a. Alignment: Less than full diameter of inside of pipe is visible between structures.
    b. Deflection: Flexible piping with deflection that prevents passage of ball or cylinder of size not less than 92.5 percent of piping diameter.
    c. Damage: Crushed, broken, cracked, or otherwise damaged piping.
    d. Infiltration: Water leakage into piping.
    e. Exfiltration: Water leakage from or around piping.

2. Replace defective piping using new materials, and repeat inspections until defects are within allowances specified.
3. Re-inspect and repeat procedure until results are satisfactory.

3.9 CLEANING

A. Clean interior of piping of dirt and superfluous materials. Flush with water.

END OF SECTION 334200