STRUCTURAL DESIGN LOAD DATA

THE FOLLOWING DESIG LOADS ARE APPLICABLE TO THIS FACILITY IN ACCORDANCE WITH IBC 2018

DESIGN LIVE LOADING		
AREA	UNIFORM LOAD	CONCENTRATED LOAD
OFFICE	50 PSF	2,000 POUNDS
CLASSROOM	40 PSF	1,000 POUNDS
CORRIDOR	100 PSF	1,000 POUNDS
CORRIDOR ABOVE FIRST FLOOR	80 PSF	1,000 POUNDS
STORAGE	150 PSF	-
ROOF (NON-SNOW)	30 PSF	300 POUNDS

DESIGN SNOW LOADING DATA		
GROUND SNOW LOAD	P_g	25 PSF
EXPOSURE FACTOR	C_e	1.0
SLOPE FACTOR	C_s	1.0
THERMAL FACTOR	C_t	1.0
IMPORTANCE FACTOR	I	1.1
FLAT ROOF SNOW LOAD	P_f	20 PSF
DRIFTED SNOW LOAD	P_s	SEE PLAN

DESIGN WIND LOADING DATA		
RISK CATEGORY		III
BASIC WIND SPEED	V_{ult}	120 MPH
NOMINAL WIND SPEED	V_{asd}	93 MPH
EXPOSURE		B
MEAN ROOF HEIGHT	h	40 FT
DIRECTIONALITY FACTOR	K_d	0.85
TOPOGRAPHIC FACTOR	K_{zt}	1.0
GROUND ELEVATION FACTOR	K_e	1.0
MEAN VELOCITY PRESSURE COEFFICIENT	K_h	0.76
INTERNAL PRESSURE COEFFICIENT	GC_{pi}	±0.18
MEAN VELOCITY PRESSURE	q_h	23.8 PSF

DESIGN PRESSURES (C&C) EXPOSURE C							
H	TRIB. AREA	ROOF				WALL	
		ZONE 1'	ZONE 1	ZONE 2	ZONE 3	ZONE 4	ZONE 5
≤15'	10	+12.7/-28.7	+12.7/-50.0	+12.7/-65.8	+12.7/-89.8	+31.3/-34.0	+31.3/-42.0
	100	+10.0/-28.7	+10.0/-39.0	+10.0/-51.8	+10.0/-61.6	+26.6/-29.3	+26.6/-32.5
20'	10	+13.5/-30.6	+13.5/-53.3	+13.5/-70.2	+13.5/-95.7	+33.4/-36.2	+33.4/-44.8
	100	+10.7/-30.6	+10.7/-41.5	+10.7/-55.2	+10.7/-65.7	+28.4/-31.2	+28.4/-34.7
30'	10	+14.7/-33.2	+14.7/-57.8	+14.7/-76.2	+14.7/-103.9	+36.3/-39.3	+36.3/-48.6
	100	+11.6/-33.2	+11.6/-45.1	+11.6/-59.9	+11.6/-71.3	+30.8/-33.9	+30.8/-37.7
40'	10	+15.6/-35.3	+15.6/-61.5	+15.6/-81.1	+15.6/-110.6	+38.6/-41.9	+38.6/-51.7
	100	+12.4/-35.3	+12.4/-48.0	+12.4/-63.8	+12.4/-75.8	+32.8/-36.1	+32.8/-40.1
50'	10	+16.4/-37.0	+16.4/-64.4	+16.4/-84.9	+16.4/-115.8	+40.4/-43.8	+40.4/-54.1
	100	+12.9/-37.0	+12.9/-50.2	+12.9/-66.8	+12.9/-79.4	+34.3/-37.8	+34.3/-42.0

* WIND LOADS SHOWN ARE ULTIMATE LOADS
* USE 16 PSF MIN
* CONTRACTORS MAY CALCULATE ALTERNATE WIND LOADING APPLICABLE TO INDIVIDUAL SYSTEMS
* LOADS BASED ON CH. 30 PART 2 (SIMPLIFIED METHOD) FOR FLAT/HIP/GABLE 0≤ θ ≤7

DESIGN SEISMIC LOADING DATA		
RISK CATEGORY		III
IMPORTANCE FACTOR	I	1.25
MAPPED SHORT PERIOD ACCELERATION	S_s	0.188
MAPPED 1 SEC ACCELERATION	S_1	0.048
DESIGN SHORT PERIOD ACCELERATION	S_{DS}	0.163
DESIGN 1 SEC ACCELERATION	S_{D1}	0.048
SITE CLASS		C
SEISMIC DESIGN CATEGORY		A
ANALYSIS METHOD		N/A

GENERAL NOTES

1. ALL CONSTRUCTION SHALL CONFORM TO THE INTERNATIONAL BUILDING CODE (IBC) 2018, INCLUDING ALL CURRENT REFERENCED STANDARDS PER CHAPTER 35, AND TO ALL OTHER APPLICABLE FEDERAL, STATE AND LOCAL REGULATIONS INCLUDING BUT NOT LIMITED TO OSHA AND ADA REQUIREMENTS.
2. ANY AND ALL QUESTIONS PERTAINING TO THE WORK DESCRIBED IN THESE CONTRACT DOCUMENTS SHALL BE SUBMITTED IN WRITTEN FORM, IN ACCORDANCE WITH THE ESTABLISHED 'REQUEST FOR INFORMATION' (RFI) PROCEDURES.
3. COORDINATE ALL SPECIFICATION REQUIREMENTS WITH THE INFORMATION SHOWN ON DRAWINGS AND IN THESE STRUCTURAL NOTES.
4. DO NOT SCALE DRAWINGS. IT IS THE CONTRACTOR'S RESPONSIBILITY TO NOTIFY THE ARCHITECT/ENGINEER TO RESOLVE ANY DIMENSIONAL DISCREPANCIES RELATED TO THE DRAWINGS AND/OR EXISTING FIELD CONDITIONS WHERE APPROPRIATE.
5. DO NOT MODIFY SIZE, SHAPE, LOCATION, OR SPACING OF STRUCTURAL ELEMENTS WITHOUT APPROVAL FROM THE ENGINEER.
6. TYPICAL DETAILS ARE NOT INDICATED ON PLANS AND ARE REQUIRED TO BE APPLIED AND INTEGRATED INTO THE CONSTRUCTION WHERE APPLICABLE.
7. CONTRACTOR IS RESPONSIBLE FOR PRECISELY LOCATING ALL EXISTING UTILITIES PRIOR TO COMMENCING WORK. ANY DAMAGE INCURRED AS A RESULT OF THE CONTRACTOR'S FAILURE TO DO SO IS THE SOLE RESPONSIBILITY OF THE CONTRACTOR.
8. THE GC SHALL BE RESPONSIBLE FOR COORDINATING, OBTAINING AND TRANSMITTING ALL GEOMETRY AND REQUIRED FIELD DIMENSIONING TO THE VARIOUS TRADES IN ORDER TO PERFORM THE WORK. THE GC SHALL BE SOLELY RESPONSIBLE FOR COORDINATING WORK AND FIELD DIMENSIONS AMONG THE VARIOUS TRADES.
9. THE CONTRACTOR IS RESPONSIBLE FOR ALL PATCHING, REPAIR, AND RESTORATION OF INSTALLED MATERIALS WHERE SUCH MATERIALS ARE DAMAGED OR DEMOLISHED DURING THE COURSE OF CONSTRUCTION. ALL PATCHING, REPAIR, AND RESTORATION SHALL MATCH THE PREVIOUSLY EXISTING CONDITIONS.
10. ANY ADDITIONAL WORK REQUIRED BY THE ARCHITECT/ENGINEER (DESIGN, SKETCHES, DRAWING DOCUMENTATION, FIELD VISITS, ETC) TO CORRECT OR REVISE CONTRACTOR CONSTRUCTION ERRORS SHALL BE AT THE SOLE EXPENSE OF THE CONTRACTOR.
11. THE COMBINATION OF DRAWINGS AND WRITTEN SPECIFICATIONS REPRESENTS THE DESCRIPTION OF WORK, AND THE CONTRACTOR IS SOLELY RESPONSIBLE TO ENSURE THAT ALL WORK DESCRIBED IS IN ACCORDANCE WITH BOTH THE CONTRACT DRAWINGS AND SPECIFICATIONS. IN THE CASE OF CONFLICT BETWEEN NOTES, DRAWINGS, AND SPECIFICATIONS, THE MOST STRINGENT REQUIREMENT WILL GOVERN.
12. THE INFORMATION CONTAINED IN THE CONTRACT DOCUMENTS REPRESENT FINISHED DESIGNS AND IN NO WAY CONSIDER OR CONVEY VARIOUS "IN CONSTRUCTION" CONDITIONS. CONSTRUCTION PROCEDURES, INCLUDING BUT NOT LIMITED TO MEANS, METHODS, PROTECTION OF BUILDING COMPONENTS, TEMPORARY WORK (INCLUDING BUT NOT LIMITED TO TEMPORARY FORMWORK, BRACING, SHORING, GUYS, ERECTION ATTACHMENTS), VERIFICATION OF ALL EXISTING CONDITIONS AND CONSTRUCTION, COORDINATION AND SAFETY SHALL BE THE SOLE RESPONSIBILITY OF THE CONTRACTOR. U.N.O. THE CONTRACTOR SHALL ENGAGE A LICENSED PROFESSIONAL ENGINEER TO DESIGN ALL TEMPORARY SUPPORT ELEMENTS AND SYSTEMS. ANY REPAIRS, REPLACEMENTS, REINFORCEMENT OR OTHER ALTERATIONS DUE TO CONSTRUCTION PROCEDURES SHALL BE THE RESPONSIBILITY OF THE CONTRACTOR WHO HAS PERFORMED THEM.

EARTHWORK

1. REFER TO 'EARTHWORK' SPECIFICATIONS FOR REQUIREMENTS
2. THE BASIS OF FOUNDATION DESIGN IS THE GEOTECHNICAL INVESTIGATIVE REPORT:
   REPORT OF GEOTECHNICAL EXPLORATION
   DAVID BLACKMORE & ASSOCIATES, INC
   PROJECT 5625GIRI; JULY 2, 2024
3. WHERE NOT SHOWN ON DRAWINGS, THE MINIMUM EMBEDMENT (BELOW FINISHED EXTERIOR GRADE) TO ALL EXTERIOR FOOTINGS SHALL BE:
   3 FEET - 0 INCHES
4. FOUNDATIONS SHALL BEAR ON UNDISTURBED, NATURAL SOIL, OR ON COMPACTED STRUCTURAL FILL THAT OVERLAYS UNDISTURBED, NATURAL SOIL.
5. REFER TO THE SPECIFICATIONS FOR EXCAVATION, BACKFILL AND PREPARATION OF THE FOUNDATION AND SLAB-ON GRADE SUBGRADE, INCLUDING COMPACTION REQUIREMENTS.
6. ALL WORK PERTAINING TO SOIL CONDITIONS (VERIFICATION OF MATERIALS, PLACEMENT OF FILL, COMPACTION, ETC) SHALL BE OVERSEEN BY A LICENSED GEOTECHNICAL ENGINEER.
7. BEARING AND SUBGRADE CONDITIONS SHALL BE OBSERVED AND VERIFIED BY A LICENSED GEOTECHNICAL ENGINEER PRIOR TO INSTALLATION OF ALL FOUNDATION AND ON-GRADE CONCRETE SLAB ELEMENTS.
8. EXCAVATION SHALL BE PERFORMED SO AS NOT TO DISTURB OR UNDERMINE ANY EXISTING ADJACENT BUILDINGS, STREETS, AND UTILITY LINES. VERIFY LOCATIONS OF ALL BELOW GRADE FEATURES AND UTILITIES PRIOR TO COMMENCEMENT OF WORK. HAND EXCAVATE AROUND UTILITIES AS REQUIRED.
9. ALL EXCAVATIONS TO HAVE NEAT CUT BOTTOM CORNERS TO PROVIDE FOR BEARING ON THE FULL BOTTOM AREA OF THE FOOTING.
10. ALL EXCAVATIONS SHALL BE KEPT FREE OF WATER, LOOSE MATERIAL AND DEBRIS PRIOR TO CONCRETE PLACEMENT. CONCRETE SHALL NOT BE PLACED IN ANY WET AREA OR UPON ANY SOFT OR FROZEN MATERIAL. CONTRACTOR SHALL DEWATER EXCAVATIONS AS REQUIRED TO MAINTAIN DRY CONDITIONS.

FOUNDATIONS

1. UNLESS SHOWN OTHERWISE, CENTER ALL FOOTING ELEMENTS UNDER WALLS AND AT COLUMN GRID INTERSECTIONS.
2. FOUNDATIONS ARE DESIGNED FOR THE FOLLOWING ALLOWABLE BEARING PRESSURE(S):
   3,000 PSF
3. ALL STEPPED FOOTINGS SHALL BE CAST CONTINUOUSLY WITHOUT CONSTRUCTION OR CONTROL JOINTS.
4. THE CONTRACTOR IS RESPONSIBLE TO COORDINATE ALL REQUIREMENTS FOR FOUNDATION WALL PENETRATIONS (PIPE, CONDUIT, DUCTS, ETC) AND PROVIDE SLEEVES, OPENINGS, AND ALL OTHER ACCOMMODATIONS AS REQUIRED TO FACILITATE INSTALLATION OF PIPES, CONDUITS, DUCTS, ETC., AFTER THE FOUNDATION WALL IS IN PLACE.
5. UNLESS SPECIFICALLY DETAILED, PENETRATIONS AND OPENINGS ARE NOT PERMITTED IN PIERS, COLUMNS, OR FOOTINGS.
6. IN ALL LOCATIONS WHERE CONCRETE MASONRY UNIT FOUNDATION WALLS ARE CONSTRUCTED BELOW THE FINISHED EXTERIOR GRADE, THE CONCRETE MASONRY UNITS SHALL BE FULLY GROUTED.
7. WHERE EARTH-FORMED FOOTINGS ARE USED, IT IS THE SOLE RESPONSIBILITY OF THE CONTRACTOR TO ENSURE THE SPECIFIED ELEVATIONS AND DIMENSIONS ARE PROVIDED. ANY AND ALL MODIFICATIONS OR CHANGES REQUIRED BY OTHER TRADE CONTRACTORS TO ACCOMMODATE FOOTINGS THAT ARE NOT INSTALLED AT THE SPECIFIED ELEVATIONS AND DIMENSIONS ARE THE SOLE RESPONSIBILITY OF THE CONTRACTOR RESPONSIBLE FOR PLACEMENT OF THE FOOTINGS.
8. REFER TO PROJECT SPECIFICATIONS FOR ALL CONCRETE MATERIAL, STRENGTH, MIXTURE, PLACEMENT, AND CURING REQUIREMENTS.
9. CONCRETE FOR FOUNDATIONS SHALL BE PLACED ON THE SAME DAY THE SUBGRADE IS APPROVED BY THE GEOTECHNICAL ENGINEER.
10. UTILITY LINES SHALL NOT BE PLACED THROUGH OR BELOW SPREAD FOOTINGS.

CONCRETE

1. CONCRETE SHALL BE DETAILED AND CONSTRUCTED IN ACCORDANCE WITH THE FOLLOWING CODES AND STANDARDS. IF A STANDARD IS LISTED AS A "REFERENCED STANDARD" WITHIN THE APPLICABLE BUILDING CODE, USE OF NON-REFERENCED EDITIONS IS PROHIBITED. IF A STANDARD IS NOT REFERENCED IN THE BUILDING CODE, THE LATEST EDITION OF THE APPLICABLE STANDARD SHOULD BE USED:
   A. ACI 318, BUILDING CODE REQUIREMENTS FOR STRUCTURAL CONCRETE
   B. ACI MANUAL OF CONCRETE PRACTICE - PARTS 1 THROUGH 5
   C. ACI 301, SPECIFICATIONS FOR STRUCTURAL CONCRETE
   D. ACI 347, GUIDE TO FORMWORK OF CONCRETE
   E. ACI 315, GUIDE TO PRESENTING REINFORCING STEEL DESIGN DETAILS
   F. ACI 305, GUIDE TO HOT WEATHER CONCRETING
   G. ACI 306, GUIDE TO COLD WEATHER CONCRETING
   H. CRSI MANUAL OF STANDARD PRACTICE
2. DETAIL, FABRICATE, AND INSTALL ALL STEEL REINFORCEMENT IN ACCORDANCE WITH ACI AND CRSI STANDARDS.
3. POSITION AND SECURELY FASTEN ALL REINFORCEMENT IN LOCATION PRIOR TO PLACING CONCRETE. POST-PLACEMENT OF REINFORCEMENT (WET STICKING) IS NOT PERMITTED.
4. THROUGHOUT CONSTRUCTION, THE CONCRETE WORK SHALL BE ADEQUATELY PROTECTED AGAINST DAMAGE DUE TO EXCESSIVE LOADING, CONSTRUCTION EQUIPMENT, MATERIAL OR METHODS, ICE, RAIN, SNOW, EXCESSIVELY HOT OR COLD TEMPERATURES AND ANY OTHER DETRIMENTAL ENVIRONMENTAL FACTORS. ANY REPAIRS, REPLACEMENTS, ALTERATIONS OR OTHER ADDITIONAL WORK DUE TO IMPROPER PROTECTION SHALL BE THE SOLE RESPONSIBILITY OF THE CONTRACTOR.
5. ON GRADE SLAB CONTRACTION AND CONSTRUCTION JOINTS ARE REQUIRED WHERE SHOWN ON DRAWINGS. REFER TO CONCRETE SPECIFICATIONS FOR SLAB JOINT PLACEMENT WHEN JOINT LAYOUT AND LOCATIONS ARE NOT SHOWN ON PLANS.
6. CURE CONCRETE ELEMENTS IN ACCORDANCE WITH THE SPECIFICATIONS.
7. CHAMFER ALL EXPOSED CONCRETE CORNERS U.N.O. ON THE DRAWINGS.
8. THE CONTRACTOR IS RESPONSIBLE FOR COORDINATING ALL LOCATIONS AND DIMENSIONS OF RECESSED SLAB AREAS, PLATFORMS, CURBS, AND MECHANICAL EQUIPMENT PADS.
9. CONSTRUCTION JOINTS FOR SLABS ON METAL DECK SHALL BE LOCATED MIDWAY BETWEEN BEAMS WHERE THE JOINT IS PARALLEL TO BEAM SPAN. JOINTS SHALL BE LOCATED WITHIN THE MIDDLE THIRD OF SPAN WHERE THE JOINT IS PERPENDICULAR TO BEAM SPAN. ANY STOP IN CONCRETE WORK MUST BE MADE WITH VERTICAL BULKHEADS, UNLESS OTHERWISE SHOWN. ALL REINFORCING TO BE CONTINUOUS THROUGH JOINTS.
10. CONCRETE SLABS SHALL BE FINISHED FLAT AND LEVEL WITHIN TOLERANCES INDICATED IN THE PROJECT SPECIFICATIONS. THE CONTRACTOR SHALL PROVIDE ADDITIONAL CONCRETE REQUIRED DUE TO FORMWORK, METAL DECK, AND FRAMING DEFLECTION TO ACHIEVE THE REQUIRED FINISHED TOP OF SLAB ELEVATION. ANY POST-PLACEMENT CORRECTIVE ACTIONS REQUIRED TO LEVEL, FLATTEN, OR OTHERWISE BRING CONCRETE SLABS INTO COMPLIANCE WITH THE REQUIREMENTS OF THE CONTRACT DOCUMENTS SHALL BE THE SOLE RESPONSIBILITY OF THE CONTRACTOR.

MASONRY

1. MASONRY SHALL BE DETAILED AND CONSTRUCTED IN ACCORDANCE WITH FOLLOWING CODES AND STANDARDS. IF A STANDARD IS LISTED AS A "REFERENCED STANDARD" WITHIN THE APPLICABLE BUILDING CODE, USE OF NON-REFERENCED EDITIONS IS PROHIBITED. IF A STANDARD IS NOT REFERENCED IN THE BUILDING CODE, THE LATEST EDITION OF THE APPLICABLE STANDARD SHOULD BE USED:
   A. TMS 402, BUILDING CODE REQUIREMENTS FOR MASONRY STRUCTURES
   B. TMS 602, SPECIFICATION FOR MASONRY STRUCTURES.
2. GROUT MAY BE EITHER 'FINE' OR 'COARSE' AS APPROPRIATE FOR EACH SPECIFIC APPLICATION.
3. PROVIDE MORTAR IN ACCORDANCE WITH ASTM C270, TYPE AS INDICATED IN PROJECT SPECIFICATIONS FOR APPLICABLE USE.
4. ADMIXTURES IN GROUT AND MORTAR ARE NOT PERMITTED.
5. USE OF MASONRY CEMENT IS NOT PERMITTED.
6. ALL REINFORCING IN CONCRETE MASONRY CONSTRUCTION MUST BE IN PLACE PRIOR TO INSTALLATION OF GROUT. REINFORCING BARS SHALL BE HELD IN PLACE WITH BAR POSITIONERS OR OTHER APPROPRIATE MEANS TO PREVENT DISPLACEMENT. DO NOT WET-SET OR PLUNGE REINFORCING BARS INTO GROUTED AREAS.
7. DO NOT LEAVE UNFINISHED MASONRY WALLS OPEN TO WEATHER AND WATER INTRUSION. ALL UNFINISHED MASONRY SHALL BE TEMPORARILY PROTECTED.
8. LINTELS ARE REQUIRED TO SUPPORT MASONRY ACROSS ALL OPENINGS. TYPICAL DETAILS INDICATE LINTEL TYPES TO BE USED. REFER TO ARCHITECTURAL AND MECHANICAL/ ELECTRICAL/PLUMBING DRAWINGS FOR ALL MASONRY WALL LOCATIONS AND OPENINGS.
9. NOT ALL LINTELS ARE SHOWN ON STRUCTURAL DRAWINGS. CONTRACTOR IS RESPONSIBLE FOR DEVELOPING LINTEL SUBMITTAL TO INDICATE ALL OPENINGS IN MASONRY WALLS AND CORRESPONDING LINTEL TYPE AND INSTALLATION DETAILS.
10. THE CONTRACTOR SHALL COORDINATE LINTEL TYPE (STEEL, MASONRY, ETC.) AT EACH LOCATION WITH ARCHITECTURAL AND STRUCTURAL CONTRACT DOCUMENTS. THE STRUCTURAL CONTRACT DOCUMENTS PROVIDE DESIGN FOR EACH LINTEL TYPE, BUT SHALL NOT BE USED FOR SELECTION OF LINTEL TYPE UNLESS SPECIFICALLY NOTED ON THE DRAWINGS. CONTRACTOR HAS THE OPTION TO PROVIDE ALTERNATE LINTEL CONFIGURATIONS TO ACCOMMODATE CONSTRUCTION. IN DOING SO, CONTRACTOR SHALL SUBMIT ALL PERTINENT LINTEL DATA AND CORRESPONDING ENGINEERING DATA TO THE ENGINEER FOR APPROVAL. PROVIDING ALTERNATES WITHOUT APPROVAL IS PROHIBITED AND REMEDIAL MEASURES FOR UNAPPROVED ALTERNATES SHALL BE THE SOLE RESPONSIBILITY OF THE CONTRACTOR.
11. ALL STEEL LINTELS IN EXTERIOR WALLS SHALL BE HOT-DIPPED GALVANIZED.

STRUCTURAL STEEL

1. STRUCTURAL STEEL SHALL BE DETAILED, FABRICATED AND ERECTED IN ACCORDANCE WITH THE FOLLOWING CODES AND STANDARDS. IF A STANDARD IS LISTED AS A "REFERENCED STANDARD" WITHIN THE APPLICABLE BUILDING CODE, USE OF NON-REFERENCED EDITIONS IS PROHIBITED. IF A STANDARD IS NOT REFERENCED IN THE BUILDING CODE, THE LATEST EDITION OF THE APPLICABLE STANDARD SHOULD BE USED.:
   A. AISC MANUAL OF STEEL CONSTRUCTION
   B. AISC 360, SPECIFICATION FOR STRUCTURAL STEEL BUILDINGS AND BRIDGES
   C. RCSC, SPECIFICATION FOR STRUCTURAL STEEL JOINTS USING HIGH STRENGTH BOLTS
   D. AISC 303, CODE OF STANDARD PRACTICE FOR STEEL BUILDINGS AND BRIDGES
2. PROVIDE STRUCTURAL STEEL SHAPES USING AISC STANDARDS SECTIONS AND GRADES AS FOLLOWS, UNO

SECTION TYPE	MATERIAL GRADE
W & WT	ASTM A992
M, S, MT & ST	ASTM A36
HP	ASTM A572, GRADE 50
L	ASTM A36
C & MC	ASTM A36
HSS	ASTM A500, GRADE B
STEEL PIPE	ASTM A53, GRADE B
PLATES & BARS	ASTM A36
BOLTS	ASTM A325
HEAVY HEX HEADED ANCHOR RODS	ASTM F1554, GRADE 36

3. WHERE BEAM SPACING IS NOT SHOWN ON DRAWINGS, SPACE BEAMS EQUALLY BETWEEN PRIMARY SUPPORTS (COLUMNS, WALLS, ETC).
4. FIELD MODIFICATIONS TO ALL STRUCTURAL STEEL COMPONENTS INCLUDING, BUT NOT LIMITED TO MEMBERS, CONNECTIONS, ATTACHMENTS, AND REINFORCEMENT ARE PROHIBITED WITHOUT APPROVAL FROM THE ENGINEER AND FABRICATOR. ANY REPAIRS, REPLACEMENT, REINFORCING OR FURTHER ALTERATIONS DUE TO UNAPPROVED FIELD MODIFICATIONS SHALL BE THE RESPONSIBILITY OF THE CONTRACTOR THAT MADE THE MODIFICATIONS.
5. THE GENERAL CONTRACTOR AND STEEL ERECTOR SHALL NOTIFY THE ENGINEER OF ANY FABRICATION OR ERECTION ERRORS OR DEVIATIONS. FIELD MODIFICATIONS ARE PROHIBITED WITHOUT APPROVAL FROM THE ENGINEER.
6. PRIOR TO COMMENCING STEEL ERECTION, THE GENERAL CONTRACTOR SHALL CONDUCT A FIELD SURVEY OF AS-BUILT FOUNDATION COMPONENTS TO VERIFY QUANTITY, LOCATION, SIZE, SPACING AND ELEVATION OF ANCHOR RODS AND THAT ALL BEARING PLATES, EMBED PLATES, OR LEVELING PLATES ARE IN CONFORMANCE WITH THE CONTRACT DOCUMENTS AND APPROVED SHOP DRAWINGS.
7. FIELD WELDED SURFACES SHALL BE PROPERLY PREPARED, INCLUDING CLEANING AND GRINDING SMOOTH, FOR AN AREA EXTENDING (4) INCHES BEYOND THE LIMITS OF WELDING. AFTER WELDING COAT THE EXPOSED AREAS WITH THE APPROPRIATE PRIMER/PAINTS AS SPECIFIED. FIELD WELDED SURFACES OF GALVANIZED MEMBERS SHALL BE COATED WITH GALVANIZING REPAIR PAINT PER SPECIFICATIONS.
8. ALL BELOW-GRADE STRUCTURAL STEEL (COLUMNS, BASE PLATES, LEVELING PLATES, ANCHOR RODS, ETC) THAT WILL BE EXPOSED TO SUBBASE MATERIALS SHALL RECEIVE TWO COATS OF RUST-INHIBITIVE COATING PRIOR TO PLACEMENT OF FILL. COATING SHOULD BE FIELD-APPLIED AFTER STEEL ELEMENTS ARE IN PLACE.
9. CONTRACTOR IS REQUIRED TO PROVIDE ALL MISCELLANEOUS FRAMING AS NEEDED TO SUPPORT METAL FLOOR AND ROOF DECK AROUND COLUMNS AND OTHER PENETRATIONS. THESE COMPONENTS ARE NOT TYPICALLY SHOWN OR LOCATED ON STRUCTURAL PLANS.

STRUCTURAL STEEL CONNECTIONS:

1. EXCEPT WHERE OTHERWISE SHOWN ON THESE DOCUMENTS, THE DESIGN OF ALL STRUCTURAL STEEL CONNECTIONS IS DELEGATED TO A LICENSED PROFESSIONAL ENGINEER WORKING FOR THE STRUCTURAL STEEL FABRICATOR IN ACCORDANCE WITH THE FOLLOWING CRITERIA:
   A. ANY AISC-APPROVED OR AISC-PRE-QUALIFIED CONNECTION MAY BE USED AS DETERMINED BY THE FABRICATOR AND FABRICATOR'S LICENSED PROFESSIONAL ENGINEER.
   B. ALL FORCES TO BE USED FOR CONNECTION DESIGN ARE INDICATED ON THESE DRAWINGS
   C. ALL FORCES SHOWN ARE SERVICE-LEVEL (UNFACTORED), AND THE ASD METHOD SHALL BE USED TO SELECT, COMPLETE, AND/OR DESIGN CONNECTION DETAILS
   D. SEALED/SIGNED CALCULATIONS SHALL BE INCLUDED WITH THE APPROVAL DRAWINGS FOR ALL CONNECTIONS DESIGNED AND DETAILED BY THE FABRICATOR'S LICENSED PROFESSIONAL ENGINEER. THIS SHALL INCLUDE ANY TABULATED OR OTHERWISE PRE-DETERMINED DATA FOR ANY PROPOSED AISC-APPROVED OR AISC-PRE-QUALIFIED CONNECTIONS.
2. PRIOR TO THE SUBMISSION OF APPROVAL DRAWINGS, THE FABRICATOR SHALL SUBMIT FOR REVIEW AND ACCEPTANCE REPRESENTATIVE SAMPLES OF THE PROPOSED CONNECTION TYPES AND CORRESPONDING CALCULATIONS
3. MEMBER REINFORCING AT CONNECTIONS CONTAINED IN THE CONTRACT DOCUMENTS IS CONCEPTUAL. THE CONTRACTOR'S DESIGNER SHALL DETERMINE REINFORCING THICKNESSES, WIDTHS, LENGTHS, ETC. AS REQUIRED AT ALL CONNECTIONS.
4. FOR CONNECTIONS SPECIFIED ON THESE DOCUMENTS, THE FABRICATOR MAY PROPOSE ALTERNATIVE CONNECTION DETAILS. REQUESTS FOR ALTERNATE DETAILS SHALL BE MADE PRIOR TO THE SUBMISSION OF APPROVAL DRAWINGS
5. MINIMUM BOLT FOR STRUCTURAL CONNECTIONS: 3/4" DIAM.
6. ALL BOLTED CONNECTIONS SHALL HAVE MINIMUM 2 BOLTS U.N.O. ON THE CONTRACT DOCUMENTS
7. ALL BOLTED CONNECTIONS SHALL BE DESIGNED FOR 'SNUG TIGHT' CONDITION U.N.O ON THE CONTRACT DOCUMENTS.
8. COORDINATE CONNECTION DESIGNS WITH AESS REQUIREMENTS PER THE SPECIFICATIONS AS APPLICABLE.

METAL DECK

1. METAL DECK SHALL BE DETAILED, FABRICATED AND ERECTED IN ACCORDANCE WITH THE FOLLOWING CODES AND STANDARDS. IF A STANDARD IS LISTED AS A "REFERENCED STANDARD" WITHIN THE APPLICABLE BUILDING CODE, USE OF NON-REFERENCED EDITIONS IS PROHIBITED. IF A STANDARD IS NOT REFERENCED IN THE BUILDING CODE, THE LATEST EDITION OF THE APPLICABLE STANDARD SHOULD BE USED:
   A. SDI CODE OF STANDARD PRACTICE
   B. SDI SDP2, STANDARD PRACTICE DETAILS
   C. SDI MOC3, MANUAL OF CONSTRUCTION WITH STEEL DECK
   D. SDI C-2017, STANDARD FOR COMPOSITE STEEL FLOOR DECK
   E. SDI RD-2010, STANDARD FOR STEEL ROOF DECK
2. DO NOT SUSPEND DUCTWORK, CONDUIT, PIPING, OR ANY OTHER M/E/P COMPONENTS FROM ROOF DECK.
3. CONTRACTOR IS REQUIRED TO PROVIDE ALL MISCELLANEOUS FRAMING AS NEEDED TO SUPPORT METAL FLOOR AND ROOF DECK AROUND COLUMNS AND OTHER PENETRATIONS. THESE COMPONENTS ARE NOT TYPICALLY SHOWN OR LOCATED ON STRUCTURAL PLANS.
4. SPECIFIED DECK HAS BEEN DESIGNED FOR CONTINUOUS, 3-SPAN CONDITION, TYPICAL UNLESS NOTED OTHERWISE.
5. SPECIFIED FLOOR DECK SUPPORTING CONCRETE HAS BEEN DESIGNED FOR USE IN AN UNSHORED CONDITION.
6. FASTEN METAL DECK TO SUPPORTING STRUCTURE AS FOLLOWS UNLESS OTHERWISE INDICATED IN SPECIFICATIONS:

   3/4" DIAM PUDDLE WELDS IN A 36/5 (OR EQUIVALENT) PATTERN
7. FASTEN SIDE LAPS WITH SELF-DRILLING SCREWS AT MIDSPAN BETWEEN SUPPORTS AND REFER TO SPECIFICATIONS FOR ADDITIONAL REQUIREMENT.
8. MECHANICAL FASTENERS ARE PERMITTED IN LIEU OF WELDS. CONTRACTOR TO PROVIDE DOCUMENTATION INDICATING FASTENER DATA AND DIAPHRAGM CAPACITY TO MEET OR EXCEED THE WELDED DIAPHRAGM CAPACITY.

COLD-FORMED METAL FRAMING

1. INTENT OF COLD-FORMED METAL FRAMING (CFMF) WORK IS SHOWN ON THE ARCHITECTURAL AND STRUCTURAL DRAWINGS.
2. ALL CFMF COMPONENTS AND SYSTEMS SHALL BE DESIGNED BY A LICENSED PROFESSIONAL ENGINEER IN ACCORDANCE WITH THE STRUCTURAL LOADING CRITERIA AND CONDITIONS SHOWN ON THE CONSTRUCTION DOCUMENTS.
3. WHERE CFMF MEMBERS ARE USED IN EXTERIOR WALL CONSTRUCTION AS BACKUP FOR MASONRY VENEER OF ALL TYPES, ALL MEMBERS SHALL BE MIN 16 GAUGE THICKNESS WHERE MASONRY WILL BE BUILT EQUAL TO OR GREATER THEN 1/2 THE HEIGHT BETWEEN CFMF BRACE POINTS.
4. ALL OTHER CFMF MEMBERS USED IN EXTERIOR WALL APPLICATIONS SHALL BE A MINIMUM OF 18 GAUGE MATERIAL.
5. SPECIFIC CFMF INFORMATION (MEMBER SIZES, GAUGES, SPACING, ETC.) SHOWN IN CONSTRUCTION DOCUMENTS ARE MINIMUM REQUIREMENTS AND MAY NOT BE REDUCED BY THE DELEGATED DESIGN PROCESS.

POST-INSTALLED ANCHORS/FASTENERS

1. THESE ANCHOR/FASTENER PRODUCTS ARE SPECIFIED AS 'BASIS OF DESIGN'. CONTRACTORS MAY SUBMIT OTHER MANUFACTURERS PRODUCTS FOR REVIEW AND APPROVAL. INCLUDE ALL CORRESPONDING PRODUCT DATA TO SHOW THAT THE SUBMITTED PRODUCT MEETS OR EXCEEDS THE PERFORMANCE OF THE BASIS OF DESIGN:

   EPOXY ANCHORS: PLAIN A36 THREADED ROD W/HILTI HIT-HY 200 ADHESIVE (SIZE AND EMBED PER DETAILS)

   EXPANSION ANCHORS: PLAIN CARBON STEEL HILTI KWIK BOLT 3 (SIZE AND EMBED PER DETAILS)

   SCREW ANCHORS: PLAIN CARBON STEEL HILTI KWIK HUS (SIZE AND EMBED PER DETAILS)
2. WHEN INSTALLING MECHANICAL AND ADHESIVE ANCHORS, THE CONTRACTOR SHALL TAKE MEASURES TO AVOID DRILLING OR CUTTING OF ANY EXISTING REINFORCING AND DESTRUCTION OF CONCRETE. HOLES SHALL BE FREE OF DUST, DIRT, WATER AND DEBRIS PRIOR TO INSTALLING MECHANICAL OR ADHESIVE ANCHORS.

IBC SPECIAL INSPECTION REQUIREMENTS

1. CHAPTER 17 OF THE INTERNATIONAL BUILDING CODE, ENTITLED 'STRUCTURAL TESTS AND SPECIAL INSPECTIONS', OUTLINES THE REQUIRED TESTING AND INSPECTION REQUIREMENTS FOR THIS PROJECT.
2. THE OWNER SHALL ENGAGE AN APPROVED AGENCY TO OVERSEE AND OBSERVE THE IMPLEMENTATION OF ALL REQUIRED STRUCTURAL TESTING AND SPECIAL INSPECTION PROCEDURES AND ACTIVITIES.
3. THE OWNER SHALL ENGAGE A TESTING AND INSPECTION AGENCY TO PERFORM SOIL TESTING AND INSPECTION SERVICES THAT ARE DESIGNATED AS SPECIAL INSPECTIONS, INCLUDING FULL TIME INSPECTION OF THE CONTROLLED COMPACTED FILL AND THE BOTTOMS OF ALL EXCAVATIONS. TESTING AND INSPECTIONS SHALL BE PERFORMED UNDER THE DIRECT SUPERVISION OF A QUALIFIED GEOTECHNICAL ENGINEER. REPORTS, INCLUDING RESULTS OF THE COMPACTION TESTING, SHALL BE SUBMITTED TO AR

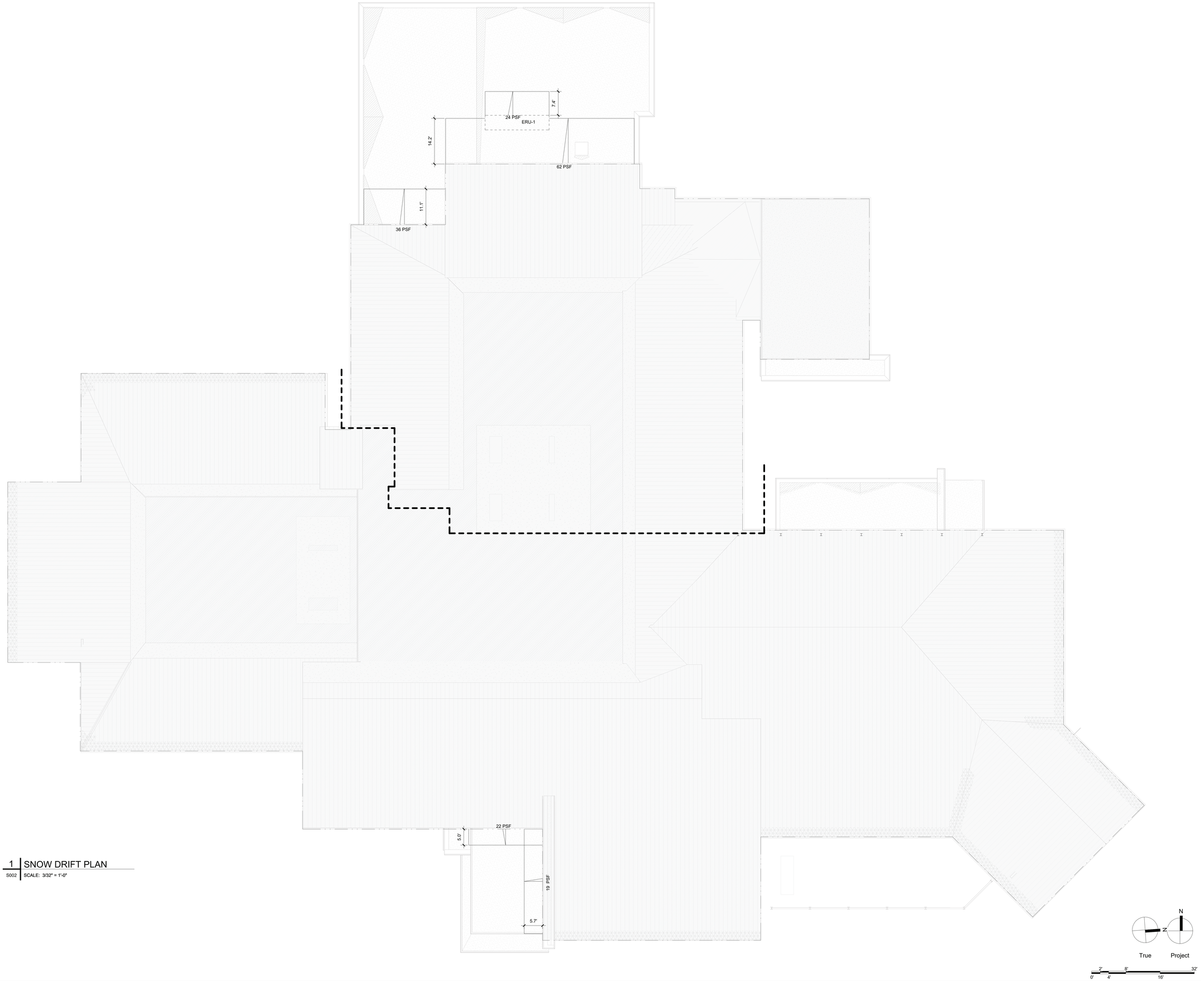

1 SNOW DRIFT PLAN
S002 SCALE: 3/32" = 1'-0"

SCHRADERGROUP
555 E North Lane, Suite 5100, Building D
Conshohocken, PA 19428
p: 215 482 7440
f: 215 482 7441
www.sgarc.com

Consultants:

Civil:
T&M Associates
1700 Market Street, Suite 3110
Philadelphia, PA 19103
(215) 282-7850

MEP:
Synder Hoffman Associates
1005 West Lehigh Street
Bethlehem, PA 18018
(610) 694-8020

Structural Engineer
SCHRADERGROUP
153 East King Street, Suite 211-212
Lancaster, PA 17602
(717) 299-8965

Professional Seal:

COMMONWEALTH OF PENNSYLVANIA
REGISTERED PROFESSIONAL
THOMAS E. FORSBERG
ENGINEER

Owner:
WEST CHESTER AREA SCHOOL DISTRICT
782 Springdale Drive, Exton, PA 19341

Additions and Renovations to:
HILLSDALE ELEMENTARY SCHOOL
725 West Market Street
West Chester, PA 19382

ISSUED FOR:

NO.	DESCRIPTION	DATE
	BUILDING PERMIT / BIDDING	10/07/2024
	GC REBID	12/03/2024

DATE: 12/03/2024

SGA PROJECT NUMBER: 23-029

Key Plan:

AREA A

Drawing Title:
SNOW DRIFT PLAN

Drawing Number:
S002

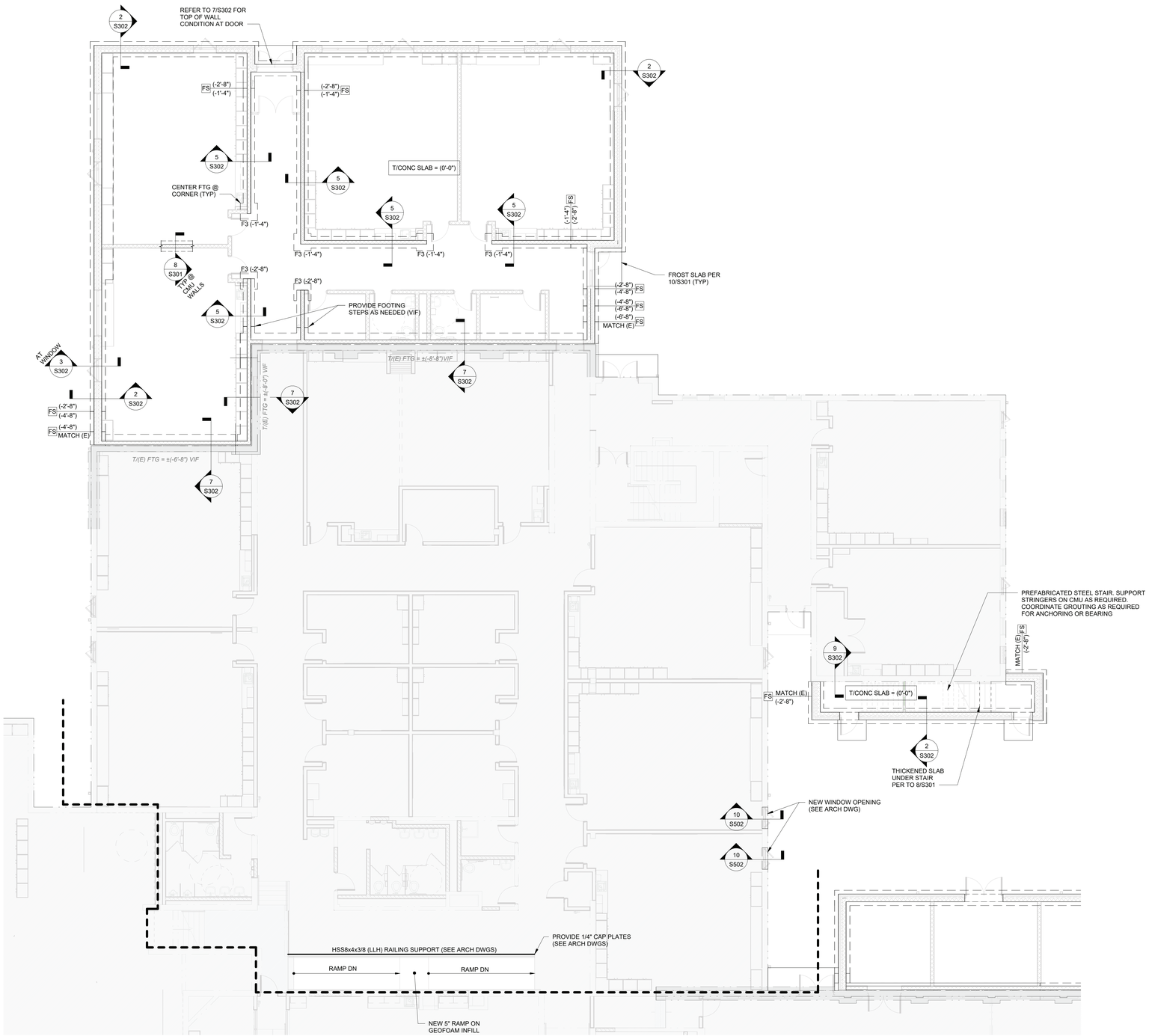

1 PARTIAL FOUNDATION PLAN - AREA A

S101.1 SCALE: 1/8" = 1'-0"

PLAN NOTES:

1. DATUM ELEVATION IS TOP OF EXISTING LOWER LEVEL SLAB ON GRADE = 0'-0" REFERENCE CIVIL DRAWINGS FOR ACTUAL ELEVATION.
2. TOP OF EXTERIOR COLUMN AND WALL FOOTING ELEVATION [-2'-8"] TYP. UNO. TOP OF INTERIOR COLUMN FOOTING ELEVATION [-1'-0"] TYP. UNO. TOP OF PIER ELEVATION [-0'-8"] TYP. UNO.
3. TOP OF ALL FOUNDATIONS/PIERS ARE INDICATED (+/- X'-X") / [+/- X'-X"] WITH RESPECT TO DATUM ELEVATION
4. ON-GRADE CONCRETE SLAB AS FOLLOWS:
   5" THICK NORMAL WEIGHT CONCRETE WITH FIBER REINFORCEMENT OVER VAPOR BARRIER ON 6"MIN. COMPACTED STRUCTURAL SUBBASE, TYP UNO
7. FOUNDATION ELEMENTS ARE INDICATED AS FOLLOWS:
   F# =FOOTING INDICATOR (SEE FOOTING SCHEDULE)
   P# = PIER INDICATOR (SEE S302)
8. FOOTING STEPS ARE INDICATED AS FOLLOWS:
   FS (+/- X'-X") (+/- X'-X") – ELEVATIONS INDICATE TOP OF FOOTING EACH SIDE OF STEP
9. STEP FOOTING AS REQUIRED FOR ALL UTILITIES. PROVIDE SLEEVES AT ALL WALL PENETRATIONS. SEE MEP DRAWINGS FOR ALL UTILITY LOCATIONS. UTILITY LINES SHOWN THUS ON PLAN: - - - - - - - - -
10. DEMOLISH EXISING FIRST FLOOR SLAB LOCALLY AS REQUIRED TO INSTALL NEW FOOTINGS

FOOTING SCHEDULE

INDICATOR	FOOTING SIZE	REINFORCEMENT
F3	3'-0" x 3'-0" x 1'-4"	(4) #5 EACH WAY
F6	6'-0" x 6'-0" x 1'-6"	(7) #6 EACH WAY

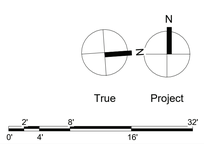

SCHRADERGROUP
555 E North Lane, Suite 5100, Building D
Conshohocken, PA 19428
p: 215 482 7440
f: 215 482 7441
www.sgarc.com

Consultants:

Civil:
T&M Associates
1700 Market Street, Suite 3110
Philadelphia, PA 19103
(215) 282-7850

MEP:
Synder Hoffman Associates
1005 West Lehigh Street
Bethlehem, PA 18018
(610) 694-8020

Structural Engineer
SCHRADERGROUP
153 East King Street, Suite 211-212
Lancaster, PA 17602
(717) 299-8965

Professional Seal:

Owner:
WEST CHESTER AREA SCHOOL DISTRICT
782 Springdale Drive, Exton, PA 19341

Additions and Renovations to:
HILLSDALE ELEMENTARY SCHOOL
725 West Market Street
West Chester, PA 19382

ISSUED FOR:

NO.	DESCRIPTION	DATE
	BUILDING PERMIT / BIDDING	10/07/2024
	GC REBID	12/03/2024

DATE: 12/03/2024

SGA PROJECT NUMBER: 23-029

Key Plan:

Drawing Title:
PARTIAL FOUNDATION PLAN - AREA A

Drawing Number:
S101.1

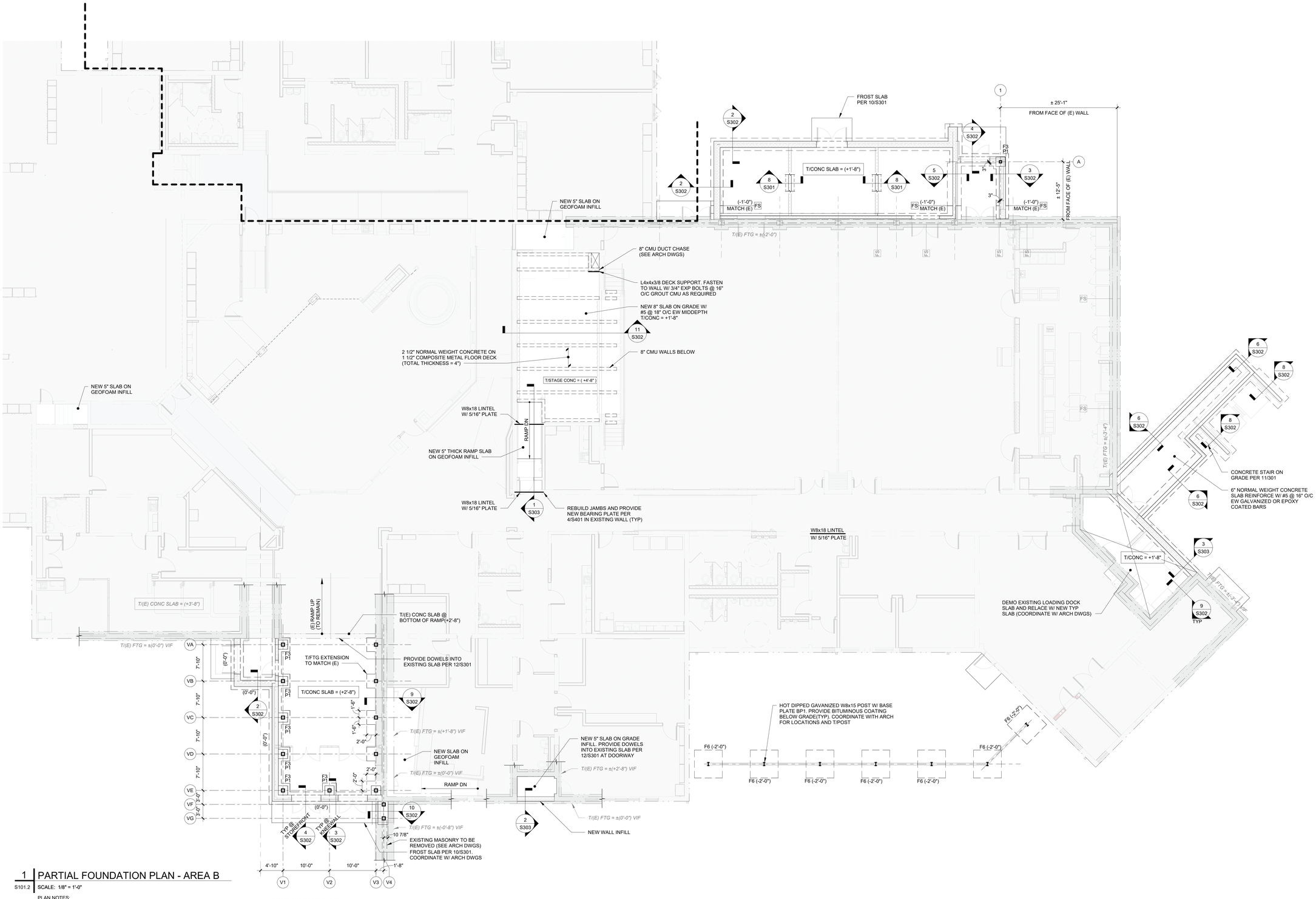

1 PARTIAL FOUNDATION PLAN - AREA B

S101.2 SCALE: 1/8" = 1'-0"

PLAN NOTES:

1. DATUM ELEVATION IS TOP OF EXISTING LOWER LEVEL SLAB ON GRADE = 0'-0" REFERENCE CIVIL DRAWINGS FOR ACTUAL ELEVATION.
2. TOP OF EXTERIOR COLUMN AND WALL FOOTING ELEVATION (-2'-8") TYP. UNO. TOP OF INTERIOR COLUMN FOOTING ELEVATION (-1'-0") TYP. UNO. TOP OF PIER ELEVATION [-0'-8"] TYP. UNO.
3. TOP OF ALL FOUNDATIONS/PIERS ARE INDICATED (+/- X'-X") / [+/- X'-X"] WITH RESPECT TO DATUM ELEVATION
4. ON-GRADE CONCRETE SLAB AS FOLLOWS:
   5" THICK NORMAL WEIGHT CONCRETE WITH FIBER REINFORCEMENT OVER VAPOR BARRIER ON 6"MIN. COMPACTED STRUCTURAL SUBBASE, TYP UNO
7. FOUNDATION ELEMENTS ARE INDICATED AS FOLLOWS:
   F# =FOOTING INDICATOR (SEE FOOTING SCHEDULE)
   P# = PIER INDICATOR (SEE S302)
8. FOOTING STEPS ARE INDICATED AS FOLLOWS:
   FS (+/- X'-X") (+/- X'-X") — ELEVATIONS INDICATE TOP OF FOOTING EACH SIDE OF STEP
9. STEP FOOTING AS REQUIRED FOR ALL UTILITIES. PROVIDE SLEEVES AT ALL WALL PENETRATIONS. SEE MEP DRAWINGS FOR ALL UTILITY LOCATIONS. UTILITY LINES SHOWN THUS ON PLAN: - - - - - - - - -
10. DEMOLISH EXISING FIRST FLOOR SLAB LOCALLY AS REQUIRED TO INSTALL NEW FOOTINGS

FOOTING SCHEDULE

INDICATOR	FOOTING SIZE	REINFORCEMENT
F3	3'-0" x 3'-0" x 1'-4"	(4) #5 EACH WAY
F6	6'-0" x 6'-0" x 1'-6"	(7) #6 EACH WAY

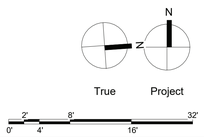

SCHRADERGROUP
555 E North Lane, Suite 5100, Building D
Conshohocken, PA 19428
p: 215 482 7440
f: 215 482 7441
www.sgarc.com

Consultants:

Civil:
T&M Associates
1700 Market Street, Suite 3110
Philadelphia, PA 19103
(215) 282-7850

MEP:
Synder Hoffman Associates
1005 West Lehigh Street
Bethlehem, PA 18018
(610) 694-8020

Structural Engineer
SCHRADERGROUP
153 East King Street, Suite 211-212
Lancaster, PA 17602
(717) 299-8965

Professional Seal:

Owner:
WEST CHESTER AREA SCHOOL DISTRICT
782 Springdale Drive, Exton, PA 19341

Additions and Renovations to:
HILLSDALE ELEMENTARY SCHOOL
725 West Market Street
West Chester, PA 19382

ISSUED FOR:

NO.	DESCRIPTION	DATE
	BUILDING PERMIT / BIDDING	10/07/2024
	GC REBID	12/03/2024

DATE: 12/03/2024

SGA PROJECT NUMBER: 23-029

Key Plan:

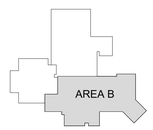

Drawing Title:
PARTIAL FOUNDATION PLAN - AREA B

Drawing Number:
S101.2

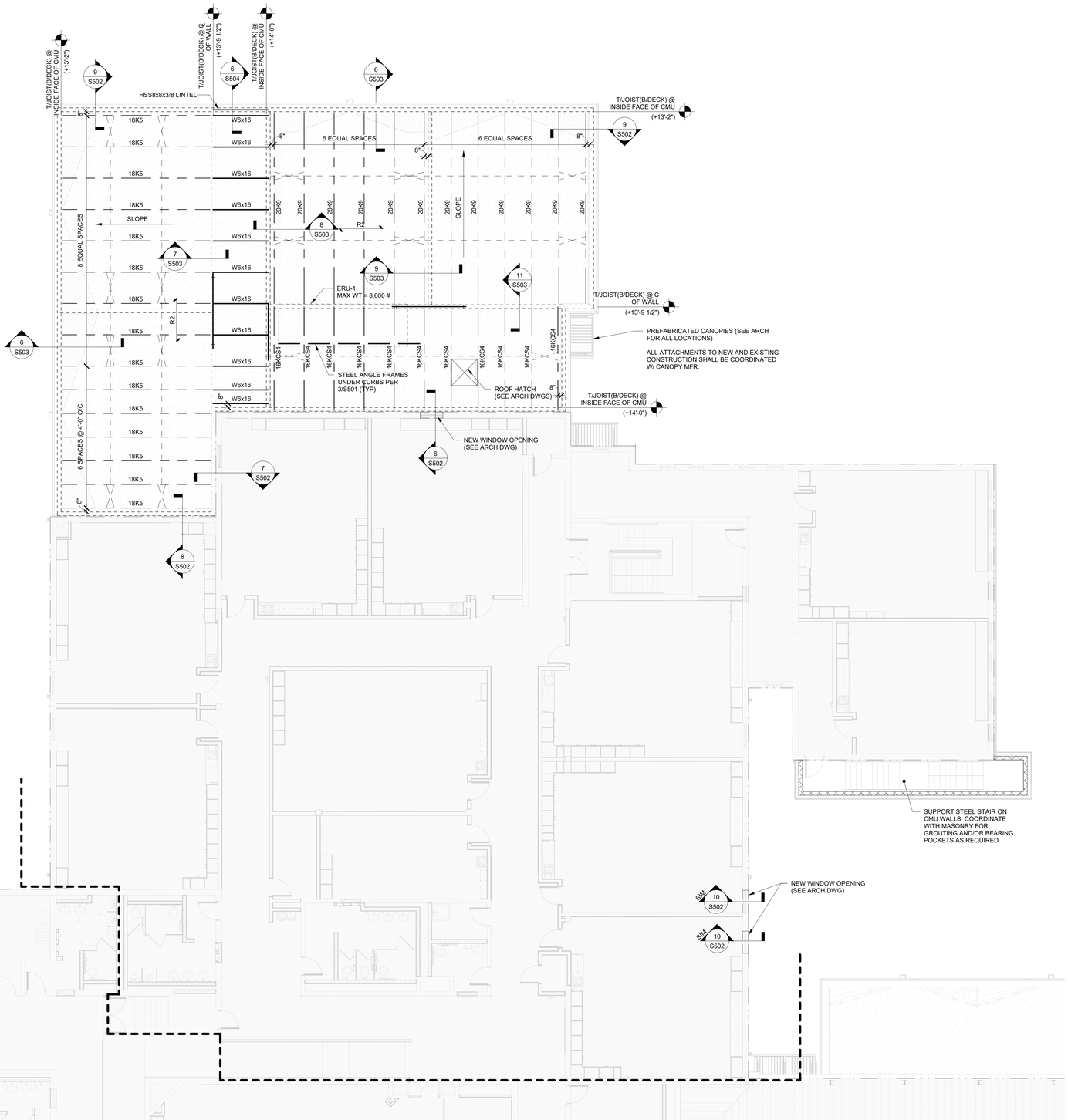

1 PARTIAL SECOND LEVEL PLAN - AREA A

S102.1 SCALE: 1/8" = 1'-0"

PLAN NOTES:

1. DATUM ELEVATION IS TOP OF EXISTING LOWER LEVEL ON-GRADE CONCRETE SLAB = 0'-0"
2. ELEVATIONS OF FRAMING ELEMENTS INDICATED (+/- X'-X") ARE WITH RESPECT TO THE SECOND FLOOR TOP OF CONCRETE ELEVATION.
3. ROOF DECK IS AS FOLLOWS:
   - TYPE R1: 3 1/2", 20 GA DOVETAIL ROOF DECK, HOT DIPPED GALVANIZED
   - TYPE R2: 3 1/2", 20 GA, ACOUSTIC DOVETAIL ROOF DECK, PRIMED
   - TYPE R3: 1 1/2", TYPE B, GALVANIZED METAL ROOF DECK
4. FRAMING SYMBOLS ARE INDICATED AS FOLLOWS:
   - ► MOMENT CONNECTION WITH BENDING MOMENT IN FOOT-KIPS
5. (##K) = BEAM REACTION IN KIPS FOR CONNECTION DESIGN (SERVICE LOAD - UNFACTORED)

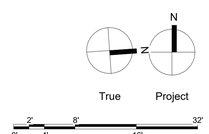

SCHRADERGROUP
555 E North Lane, Suite 5100, Building D
Conshohocken, PA 19428
p: 215 482 7440
f: 215 482 7441
www.sgarc.com

Consultants:

Civil:

T&M Associates
1700 Market Street, Suite 3110
Philadelphia, PA 19103
(215) 282-7850

MEP:

Synder Hoffman Associates
1005 West Lehigh Street
Bethlehem, PA 18018
(610) 694-8020

Structural Engineer

SCHRADERGROUP
153 East King Street, Suite 211-212
Lancaster, PA 17602
(717) 299-8965

Professional Seal:

Owner:
WEST CHESTER AREA SCHOOL DISTRICT
782 Springdale Drive, Exton, PA 19341

Additions and Renovations to:

HILLSDALE ELEMENTARY SCHOOL

725 West Market Street
West Chester, PA 19382

ISSUED FOR:

NO.	DESCRIPTION	DATE
	BUILDING PERMIT / BIDDING	10/07/2024
	GC REBID	12/03/2024

DATE: 12/03/2024

SGA PROJECT NUMBER: 23-029

Key Plan:

Drawing Title:

PARTIAL SECOND LEVEL PLAN - AREA A

Drawing Number:

S102.1

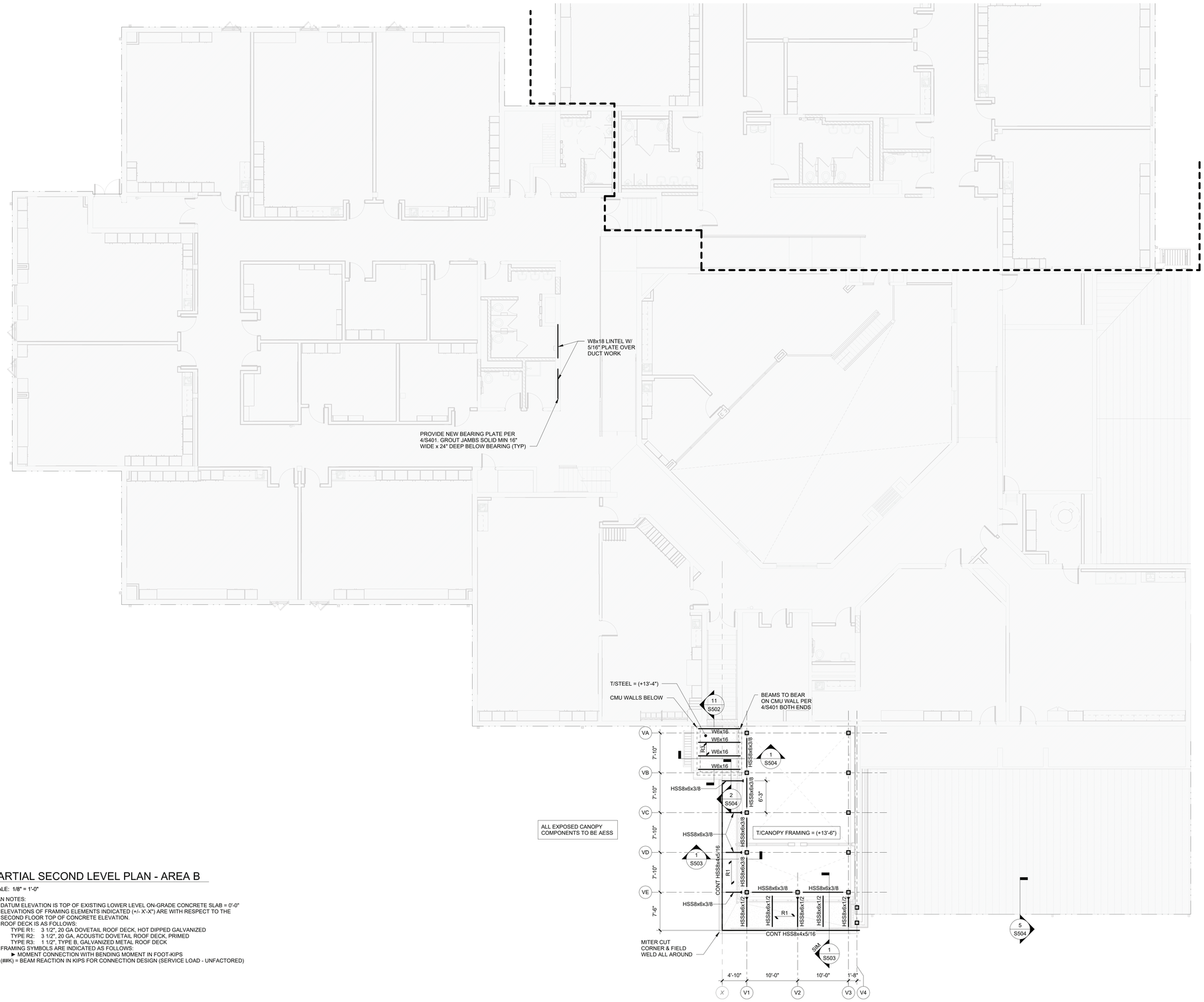

1 PARTIAL SECOND LEVEL PLAN - AREA B

S102.2 SCALE: 1/8" = 1'-0"

PLAN NOTES:

1. DATUM ELEVATION IS TOP OF EXISTING LOWER LEVEL ON-GRADE CONCRETE SLAB = 0'-0"
2. ELEVATIONS OF FRAMING ELEMENTS INDICATED (+/- X'-X") ARE WITH RESPECT TO THE SECOND FLOOR TOP OF CONCRETE ELEVATION.
3. ROOF DECK IS AS FOLLOWS:
   TYPE R1: 3 1/2", 20 GA DOVETAIL ROOF DECK, HOT DIPPED GALVANIZED
   TYPE R2: 3 1/2", 20 GA. ACOUSTIC DOVETAIL ROOF DECK, PRIMED
   TYPE R3: 1 1/2", TYPE B, GALVANIZED METAL ROOF DECK
4. FRAMING SYMBOLS ARE INDICATED AS FOLLOWS:
   ► MOMENT CONNECTION WITH BENDING MOMENT IN FOOT-KIPS
5. (##K) = BEAM REACTION IN KIPS FOR CONNECTION DESIGN (SERVICE LOAD - UNFACTORED)

True Project

0' 2' 4' 8' 16' 32'

SCHRADERGROUP
555 E North Lane, Suite 5100, Building D
Conshohocken, PA 19428
p: 215 482 7440
f: 215 482 7441
www.sgarc.com

Consultants:

Civil:
T&M Associates
1700 Market Street, Suite 3110
Philadelphia, PA 19103
(215) 282-7850

MEP:
Synder Hoffman Associates
1005 West Lehigh Street
Bethlehem, PA 18018
(610) 694-8020

Structural Engineer
SCHRADERGROUP
153 East King Street, Suite 211-212
Lancaster, PA 17602
(717) 299-8965

Professional Seal:

Owner:
WEST CHESTER AREA SCHOOL DISTRICT
782 Springdale Drive, Exton, PA 19341

Additions and Renovations to:
HILLSDALE ELEMENTARY SCHOOL
725 West Market Street
West Chester, PA 19382

ISSUED FOR:

NO.	DESCRIPTION	DATE
	BUILDING PERMIT / BIDDING	10/07/2024
	GC REBID	12/03/2024

DATE: 12/03/2024

SGA PROJECT NUMBER: 23-029

Key Plan:

Drawing Title:
PARTIAL SECOND LEVEL PLAN - AREA B

Drawing Number:
S102.2

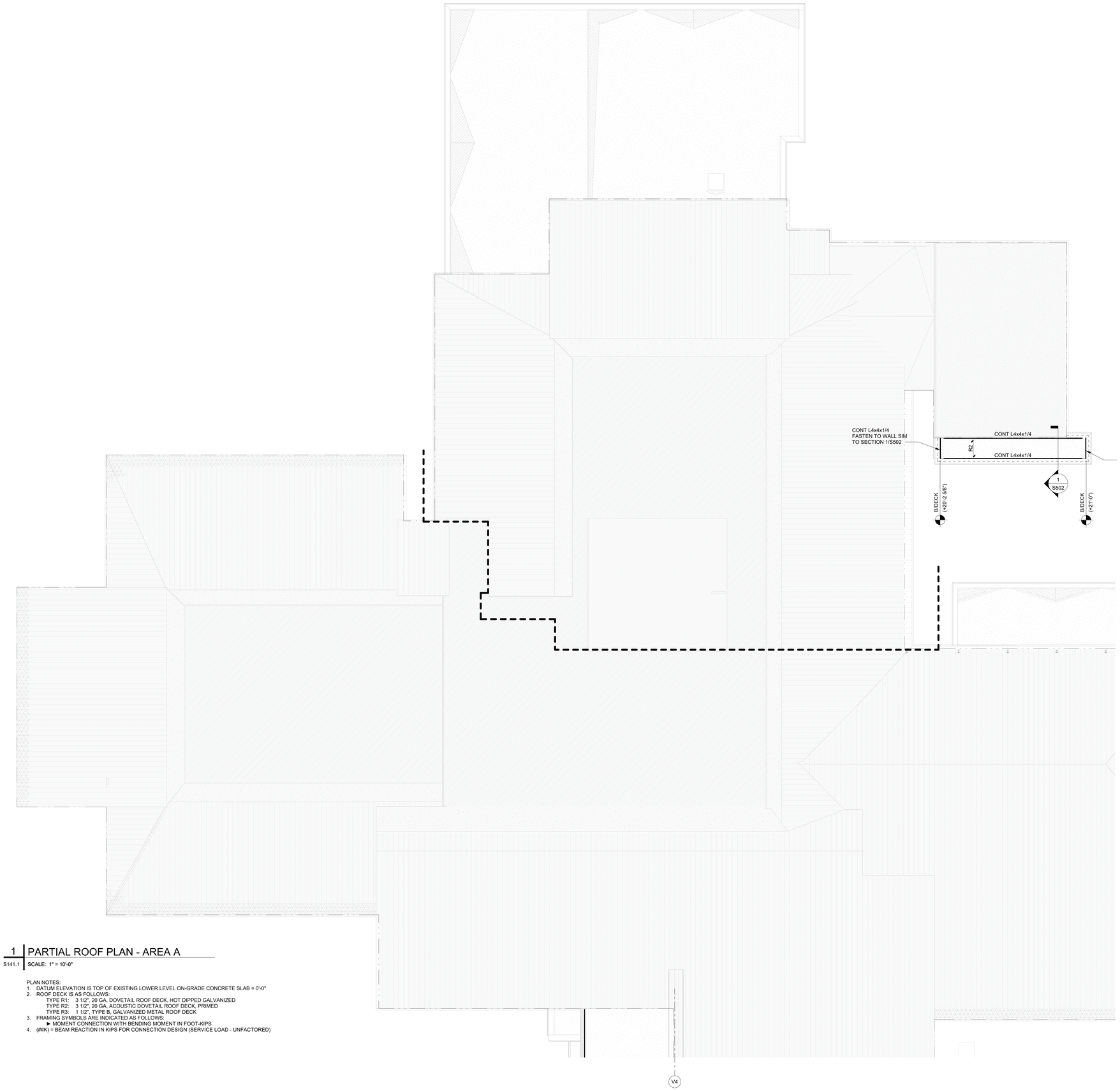

1 PARTIAL ROOF PLAN - AREA A
S141.1 SCALE: 1" = 10'-0"

PLAN NOTES:
1. DATUM ELEVATION IS TOP OF EXISTING LOWER LEVEL ON-GRADE CONCRETE SLAB = 0'-0"
2. ROOF DECK IS AS FOLLOWS:
   TYPE R1: 3 1/2", 20 GA, DOVETAIL ROOF DECK, HOT DIPPED GALVANIZED
   TYPE R2: 3 1/2", 20 GA, ACOUSTIC DOVETAIL ROOF DECK, PRIMED
   TYPE R3: 1 1/2", TYPE B, GALVANIZED METAL ROOF DECK
3. FRAMING SYMBOLS ARE INDICATED AS FOLLOWS:
   ► MOMENT CONNECTION WITH BENDING MOMENT IN FOOT-KIPS
4. (##K) = BEAM REACTION IN KIPS FOR CONNECTION DESIGN (SERVICE LOAD - UNFACTORED)

True Project
0' 2' 4' 8' 16' 32'

SCHRADERGROUP
555 E North Lane, Suite 5100, Building D
Conshohocken, PA 19428
p: 215 482 7440
f: 215 482 7441
www.sgarc.com

Consultants:

Civil:
T&M Associates
1700 Market Street, Suite 3110
Philadelphia, PA 19103
(215) 282-7850

MEP:
Synder Hoffman Associates
1005 West Lehigh Street
Bethlehem, PA 18018
(610) 694-8020

Structural Engineer
SCHRADERGROUP
153 East King Street, Suite 211-212
Lancaster, PA 17602
(717) 299-8965

Professional Seal:

COMMONWEALTH OF PENNSYLVANIA
REGISTERED PROFESSIONAL ENGINEER
THOMAS E. FORSBLING
No. PE-069487-E

Owner:
WEST CHESTER AREA SCHOOL DISTRICT
782 Springdale Drive, Exton, PA 19341

Additions and Renovations to:
HILLSDALE ELEMENTARY SCHOOL
725 West Market Street
West Chester, PA 19382

ISSUED FOR:

NO.	DESCRIPTION	DATE
	BUILDING PERMIT / BIDDING	10/07/2024
	GC REBID	12/03/2024

DATE: 12/03/2024

SGA PROJECT NUMBER: 23-029

Key Plan:

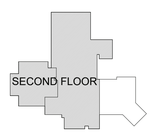

Drawing Title:
PARTIAL ROOF PLAN - AREA A

Drawing Number:
S141.1

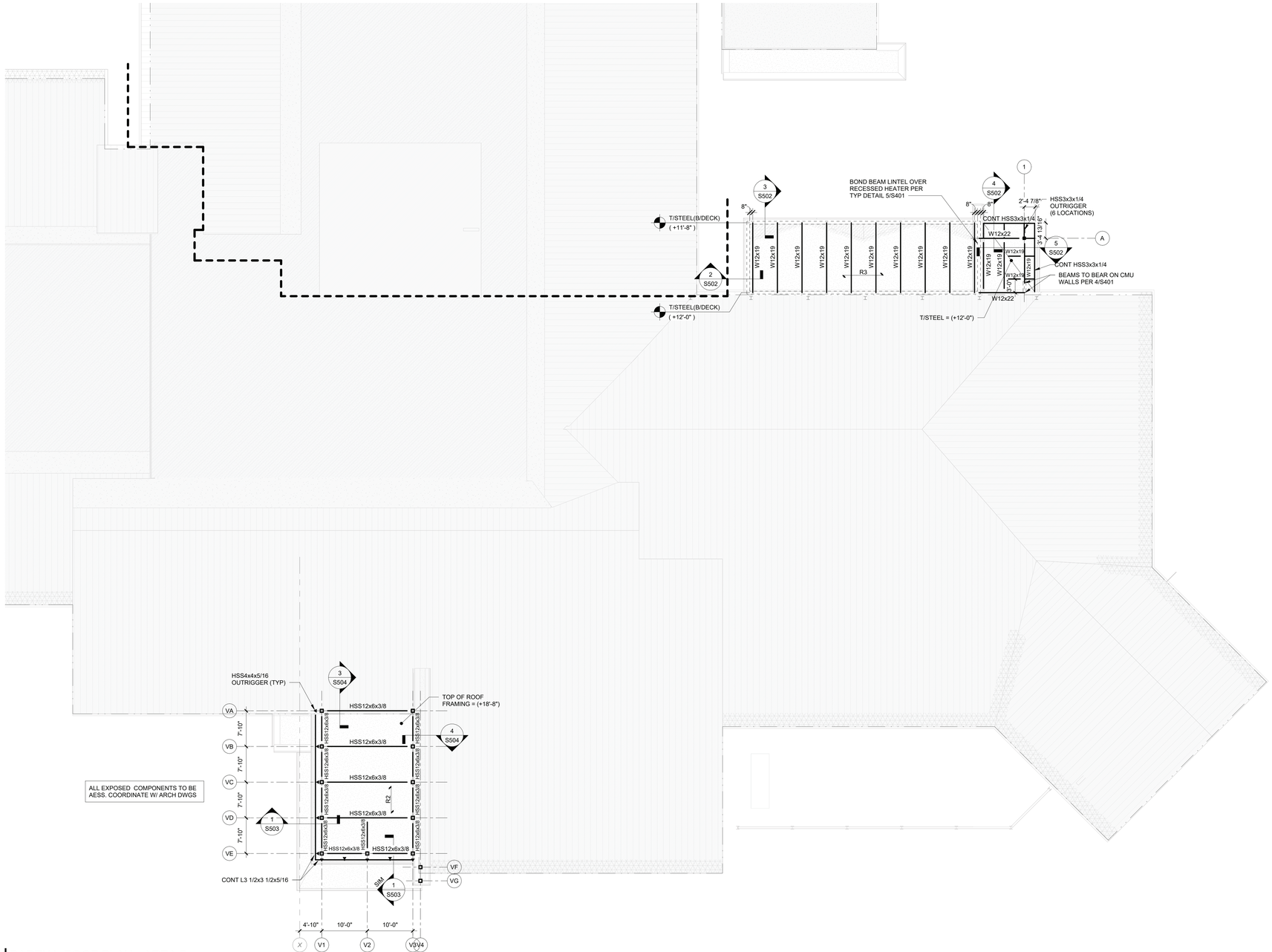

1 PARTIAL ROOF PLAN - AREA B

S141.2 SCALE: 1" = 10'-0"

PLAN NOTES:
1. DATUM ELEVATION IS TOP OF EXISTING LOWER LEVEL ON-GRADE CONCRETE SLAB = 0'-0"
2. ROOF DECK IS AS FOLLOWS:
   TYPE R1: 3 1/2", 20 GA, DOVETAIL ROOF DECK, HOT DIPPED GALVANIZED
   TYPE R2: 3 1/2", 20 GA, ACOUSTIC DOVETAIL ROOF DECK, PRIMED
   TYPE R3: 1 1/2", TYPE B, GALVANIZED METAL ROOF DECK
3. FRAMING SYMBOLS ARE INDICATED AS FOLLOWS:
   ► MOMENT CONNECTION WITH BENDING MOMENT IN FOOT-KIPS
4. (##K) = BEAM REACTION IN KIPS FOR CONNECTION DESIGN (SERVICE LOAD - UNFACTORED)

SCHRADERGROUP
555 E North Lane, Suite 5100, Building D
Conshohocken, PA 19428
p: 215 482 7440
f: 215 482 7441
www.sgarc.com

Consultants:

Civil:
T&M Associates
1700 Market Street, Suite 3110
Philadelphia, PA 19103
(215) 282-7850

MEP:
Synder Hoffman Associates
1005 West Lehigh Street
Bethlehem, PA 18018
(610) 694-8020

Structural Engineer
SCHRADERGROUP
153 East King Street, Suite 211-212
Lancaster, PA 17602
(717) 299-8965

Professional Seal:

Owner:
WEST CHESTER AREA SCHOOL DISTRICT
782 Springdale Drive, Exton, PA 19341

Additions and Renovations to:
HILLSDALE ELEMENTARY SCHOOL
725 West Market Street
West Chester, PA 19382

ISSUED FOR:

NO.	DESCRIPTION	DATE
	BUILDING PERMIT / BIDDING	10/07/2024
	GC REBID	12/03/2024

DATE: 12/03/2024

SGA PROJECT NUMBER: 23-029

Key Plan:

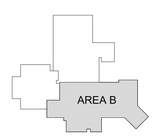

Drawing Title:
PARTIAL ROOF PLAN - AREA B

Drawing Number:
S141.2

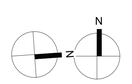

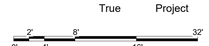

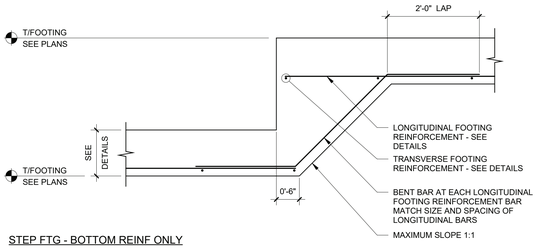

STEP FTG - BOTTOM REINF ONLY

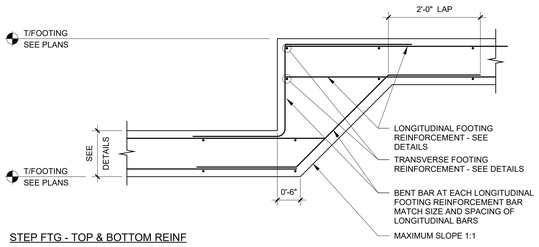

STEP FTG - TOP & BOTTOM REINF

1 TYPICAL WALL FOOTING STEP DETAIL
S301 SCALE: 3/4" = 1'-0"

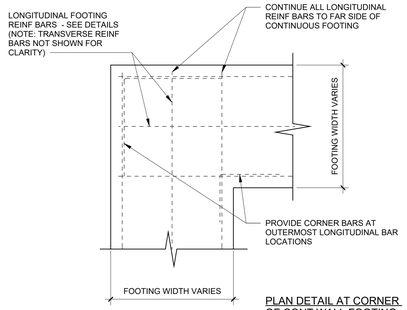

PLAN DETAIL AT CORNER OF CONT WALL FOOTING

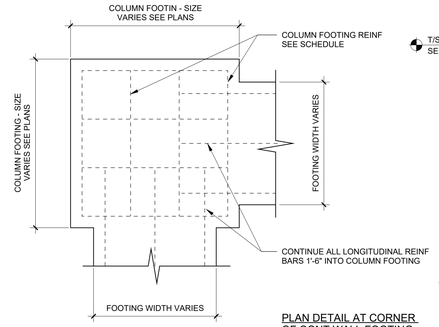

PLAN DETAIL AT CORNER OF CONT WALL FOOTING AND COLUMN FOOTING

2 TYPICAL WALL FOOTING CORNER REINFORCING
S301 SCALE: 3/4" = 1'-0"

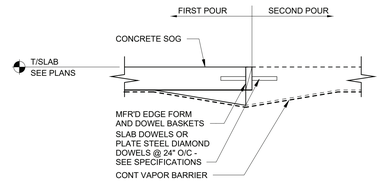

SOG CONSTRUCTION JOINT

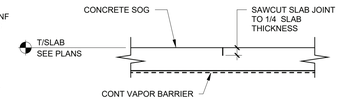

UNLESS OTHERWISE SHOWN ON PLAN, LOCATE SOG CONTRACTION JOINTS AT COLUMN LINES. PLACE ADDITIONAL CONTRACTION JOINTS BETWEEN COLUMN LINES SO THAT JOINT SPACING IS LIMITED TOAPPROXIMATELY 15 FEET O/C EACH WAY AND ASPECT RATIO OF RECTANGULARLY DIVIDED SLAB AREAS DOES NOT EXCEED 1.5:1. PROVIDE JOINT LAYOUT PLAN ON SHOP DRAWING SUBMITTAL AS INDICATED ON S001

SOG CONTRACTION JOINT

3 TYPICAL SLAB JOINTS
S301 SCALE: 3/4" = 1'-0"

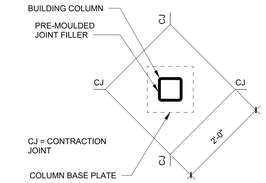

COLUMN/PIER ISOLATION JOINT

4 TYPICAL COLUMN ISOLATION JOINT
S301 SCALE: 3/4" = 1'-0"

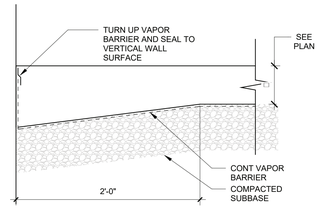

5 TYPICAL ON-GRADE SLAB HAUNCH
S301 SCALE: 1 1/2" = 1'-0"

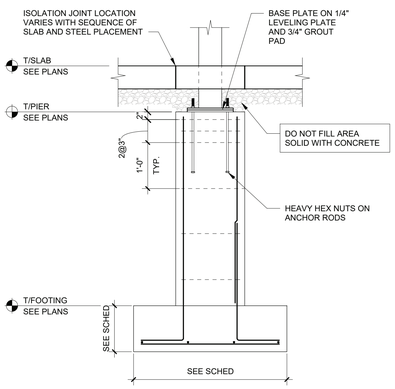

COLUMN ON PIER

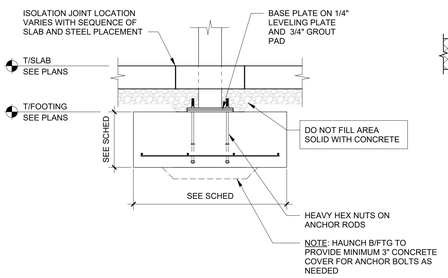

COLUMN ON FOOTING

6 PIER/FOOTING DETAILS AT COLUMNS
S301 SCALE: 3/4" = 1'-0"

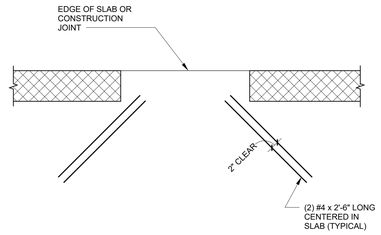

TYPICAL SLAB DETAIL AT WALL OPENING

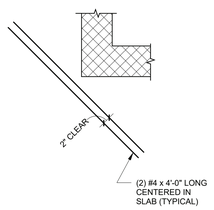

TYPICAL SLAB DETAIL AT RE-ENTRANT WALL CORNER

7 TYPICAL SLAB CORNER REINFORCING
S301 SCALE: 3/4" = 1'-0"

THICKENED SLABS ARE REQUIRED AT ALL NON-LOAD BEARING CMU WALLS - SEE ARCHITECTURAL PLANS FOR WALL LOCATIONS

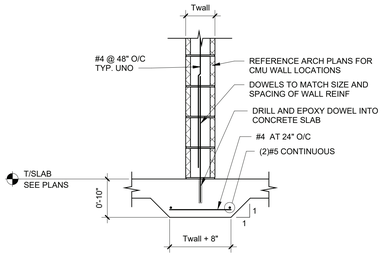

8 TYPICAL THICKENED SLAB AT CMU WALL
S301 SCALE: 3/4" = 1'-0"

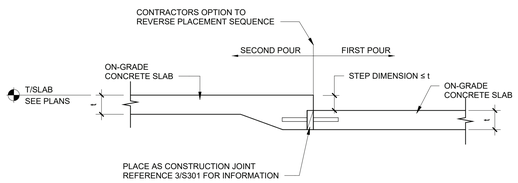

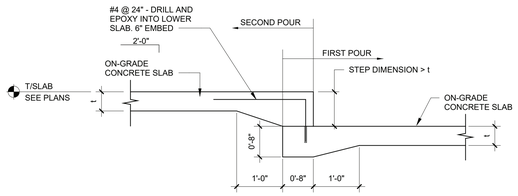

9 TYPICAL ON-GRADE SLAB STEP
S301 SCALE: 3/4" = 1'-0"

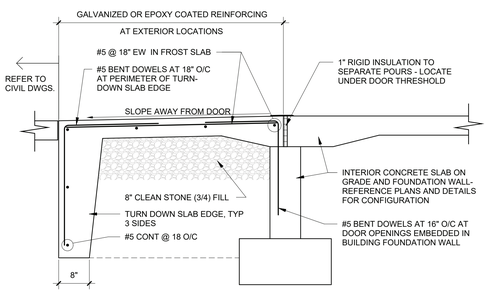

10 TYPICAL EXTERIOR DOORWAY FROST SLAB
S301 SCALE: 3/4" = 1'-0"

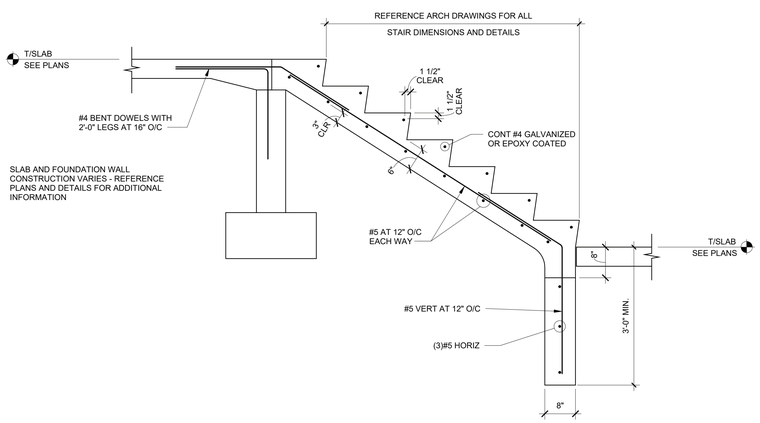

11 TYPICAL CONCRETE STAIR ON-GRADE
S301 SCALE: 3/4" = 1'-0"

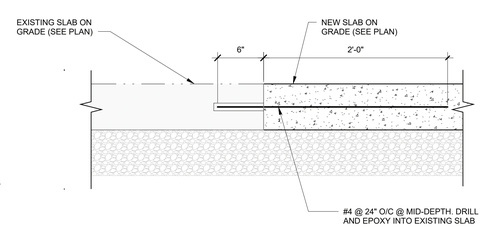

12 TYPICAL JOINT AT NEW SLAB AND EXISTING
S301 SCALE: 1 1/2" = 1'-0"

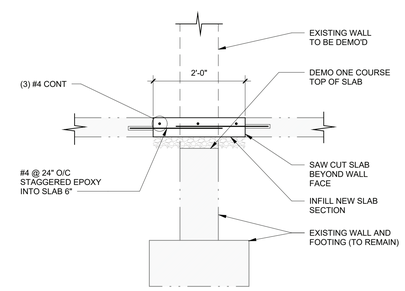

13 TYPICAL FLOOR SLAB INFILL
S301 SCALE: 3/4" = 1'-0"

THE TYPICAL FOUNDATION AND ON-GRADE SLAB DETAILS SHOWN ON THIS DRAWING SHALL BE APPLIED THROUGHOUT
THE PROJECT AT ALL LOCATIONS AS REQUIRED. SECTION INDICATORS FOR TYPICAL DETAILS ARE NOT SHOWN ON PLANS

SCHRADERGROUP
555 E North Lane, Suite 5100, Building D
Conshohocken, PA 19428
p: 215 482 7440
f: 215 482 7441
www.sgarc.com

Consultants:
Civil:
T&M Associates
1700 Market Street, Suite 3110
Philadelphia, PA 19103
(215) 282-7850

MEP:
Synder Hoffman Associates
1005 West Lehigh Street
Bethlehem, PA 18018
(610) 694-8020

Structural Engineer
SCHRADERGROUP
153 East King Street, Suite 211-212
Lancaster, PA 17602
(717) 299-8965

Professional Seal:

Owner:
WEST CHESTER AREA SCHOOL DISTRICT
782 Springdale Drive, Exton, PA 19341

Additions and Renovations to:
HILLSDALE ELEMENTARY SCHOOL
725 West Market Street
West Chester, PA 19382

ISSUED FOR:

NO.	DESCRIPTION	DATE
	BUILDING PERMIT / BIDDING	10/07/2024
	GC REBID	12/03/2024

DATE: 12/03/2024
SGA PROJECT NUMBER: 23-029

Key Plan:

Drawing Title:
FOUNDATION DETAILS

Drawing Number:
S301

STRUCTURAL COLUMN SCHEDULE			
COLUMN LOCATION	TYPE	BASE PLATE	COMMENTS
A-1	HSS6x6x3/8	BP1	
V1-VA	HSS8x8x3/8	BP1	AESS
V1-VB	HSS8x8x3/8	BP1	AESS
V1-VC	HSS8x8x3/8	BP1	AESS
V1-VD	HSS8x8x3/8	BP1	AESS
V1-VE	HSS8x8x3/8	BP1	AESS
V2-VE	HSS8x8x3/8	BP1	AESS
V3-VA	HSS8x8x3/8	BP1	AESS
V3-VB	HSS8x8x3/8	BP1	AESS
V3-VC	HSS8x8x3/8	BP1	AESS
V3-VD	HSS8x8x3/8	BP1	AESS
V3-VE	HSS8x8x3/8	BP1	AESS
V4-VF	HSS8x8x1/2	BP2	
V4-VG	HSS8x8x1/2	BP2	

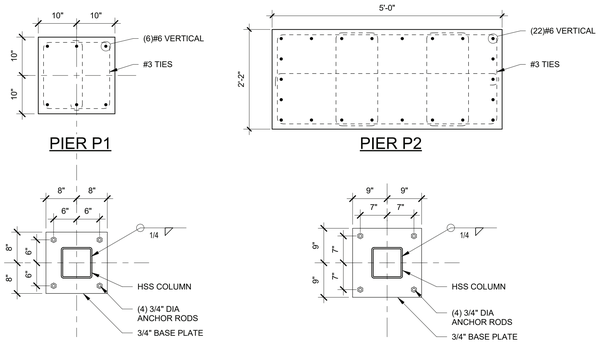

1 PIER AND BASE PLATE DETAILS
S302 SCALE: 3/4" = 1'-0"

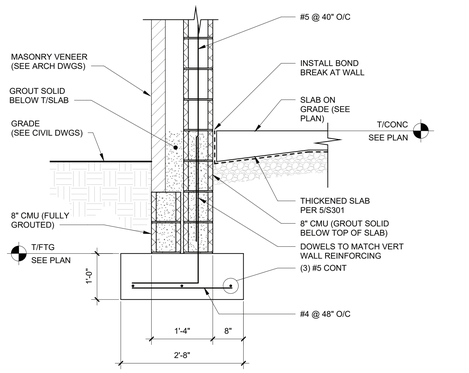

NOTE: COORDINATE REQUIREMENTS FOR PERIMETER WALL AND UNDERSLAB INSULATION WITH ARCHITECTURAL DRAWINGS

2 SECTION
S302 SCALE: 3/4" = 1'-0"

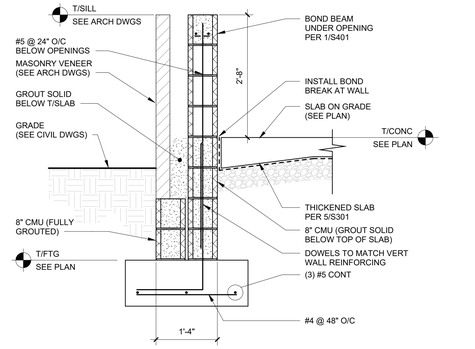

NOTE: COORDINATE REQUIREMENTS FOR PERIMETER WALL AND UNDERSLAB INSULATION WITH ARCHITECTURAL DRAWINGS

3 SECTION
S302 SCALE: 3/4" = 1'-0"

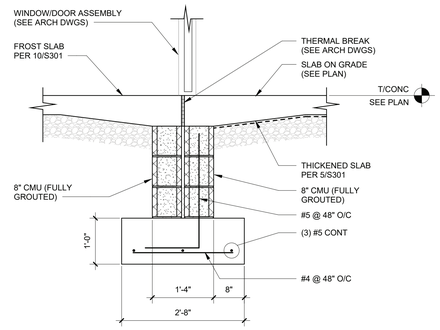

4 SECTION
S302 SCALE: 3/4" = 1'-0"

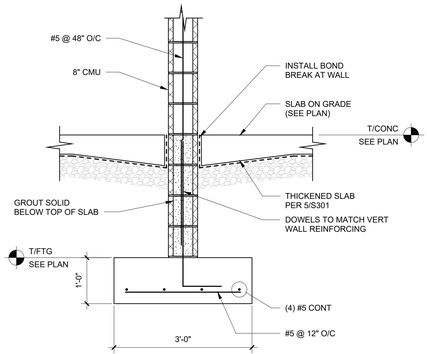

5 SECTION
S302 SCALE: 3/4" = 1'-0"

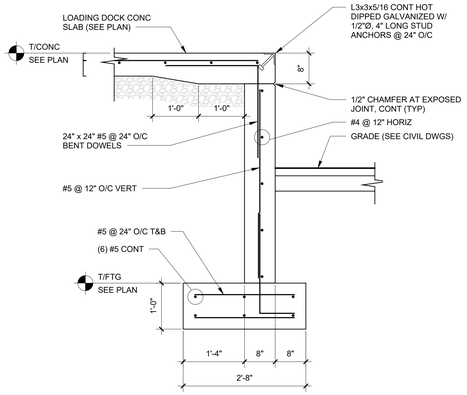

6 SECTION
S302 SCALE: 3/4" = 1'-0"

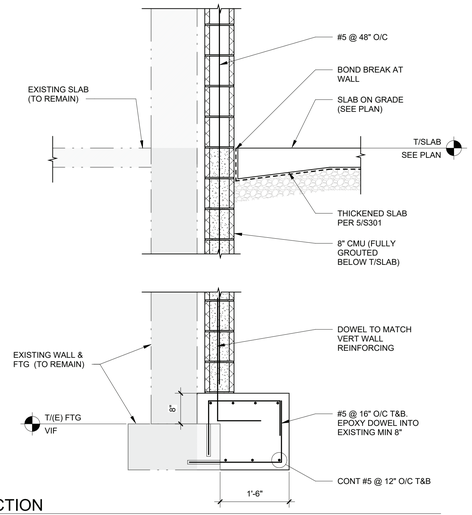

7 SECTION
S302 SCALE: 3/4" = 1'-0"

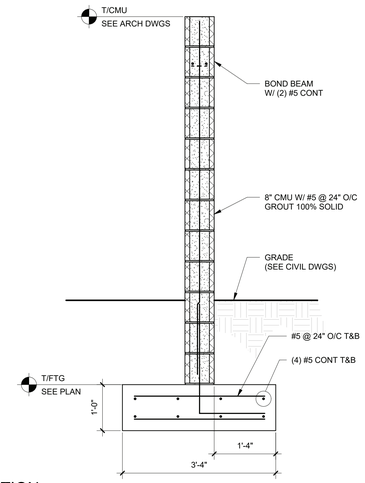

8 SECTION
S302 SCALE: 3/4" = 1'-0"

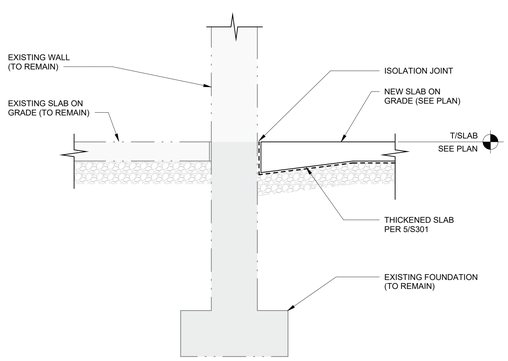

9 SECTION
S302 SCALE: 3/4" = 1'-0"

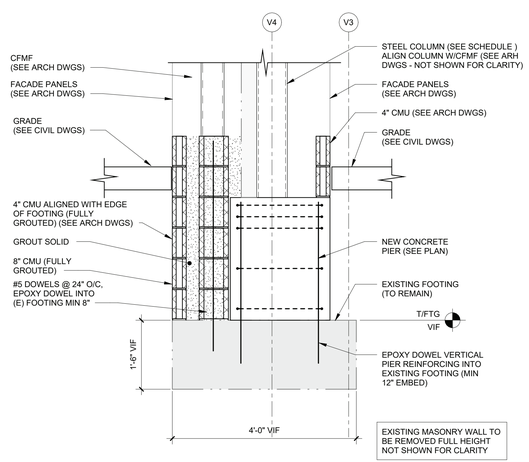

10 SECTION
S302 SCALE: 3/4" = 1'-0"

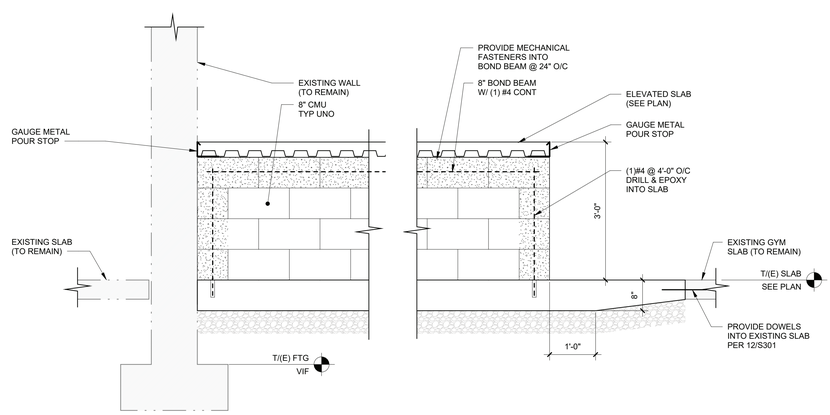

11 SECTION
S302 SCALE: 3/4" = 1'-0"

SCHRADERGROUP
555 E North Lane, Suite 5100, Building D
Conshohocken, PA 19428
p: 215 482 7440
f: 215 482 7441
www.sgarc.com

Consultants:
Civil:
T&M Associates
1700 Market Street, Suite 3110
Philadelphia, PA 19103
(215) 282-7850

MEP:
Synder Hoffman Associates
1005 West Lehigh Street
Bethlehem, PA 18018
(610) 694-8020

Structural Engineer
SCHRADERGROUP
153 East King Street, Suite 211-212
Lancaster, PA 17602
(717) 299-8965

Professional Seal:

Owner:
WEST CHESTER AREA SCHOOL DISTRICT
782 Springdale Drive, Exton, PA 19341

Additions and Renovations to:
HILLSDALE ELEMENTARY SCHOOL
725 West Market Street
West Chester, PA 19382

ISSUED FOR:

NO.	DESCRIPTION	DATE
	BUILDING PERMIT / BIDDING	10/07/2024
	GC REBID	12/03/2024

DATE: 12/03/2024

SGA PROJECT NUMBER: 23-029

Key Plan:

Drawing Title:
COLUMN SCHEDULES, PIER AND BASE PLATE DETAILS

Drawing Number:
S302

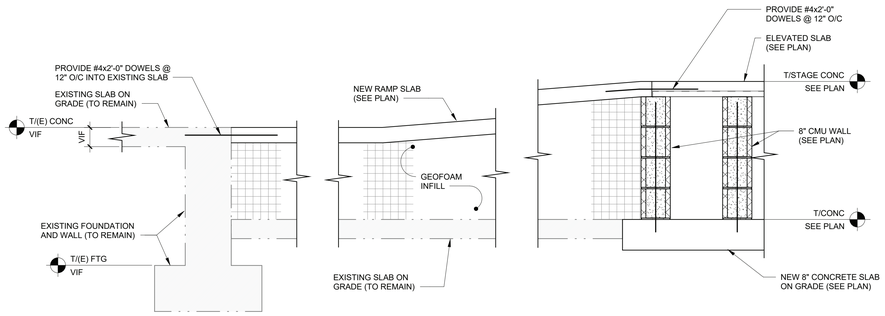

1 SECTION
S303 SCALE: 3/4" = 1'-0"

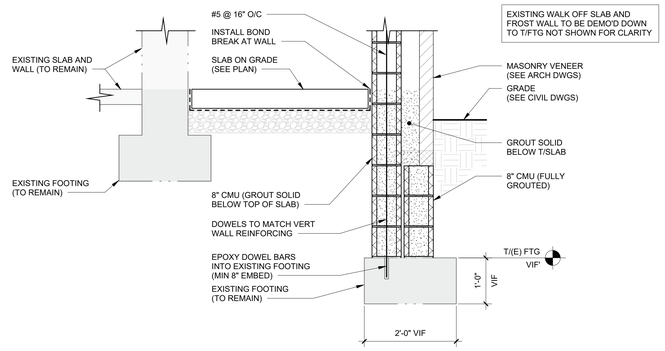

2 SECTION
S303 SCALE: 3/4" = 1'-0"

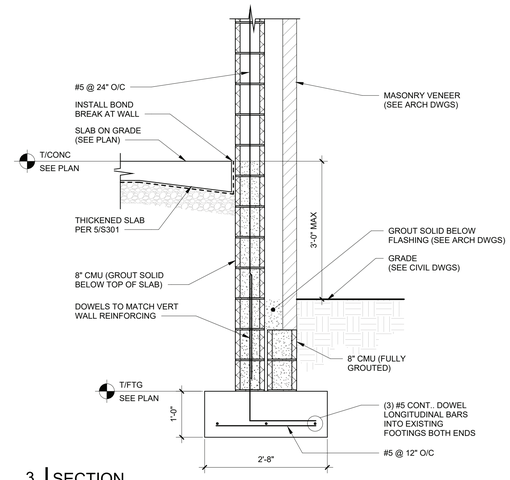

3 SECTION
S303 SCALE: 3/4" = 1'-0"

SCHRADERGROUP
555 E North Lane, Suite 5100, Building D
Conshohocken, PA 19428
p: 215 482 7440
f: 215 482 7441
www.sgarc.com

Consultants:
Civil:
T&M Associates
1700 Market Street, Suite 3110
Philadelphia, PA 19103
(215) 282-7850

MEP:
Synder Hoffman Associates
1005 West Lehigh Street
Bethlehem, PA 18018
(610) 694-8020

Structural Engineer
SCHRADERGROUP
153 East King Street, Suite 211-212
Lancaster, PA 17602
(717) 299-8965

Professional Seal:

Owner:
WEST CHESTER AREA SCHOOL DISTRICT
782 Springdale Drive, Exton, PA 19341

Additions and Renovations to:
HILLSDALE ELEMENTARY SCHOOL
725 West Market Street
West Chester, PA 19382

ISSUED FOR:

NO.	DESCRIPTION	DATE
	BUILDING PERMIT / BIDDING	10/07/2024
	GC REBID	12/03/2024

DATE: 12/03/2024

SGA PROJECT NUMBER: 23-029

Key Plan:

Drawing Title:
FOUNDATION SECTIONS

Drawing Number:
S303

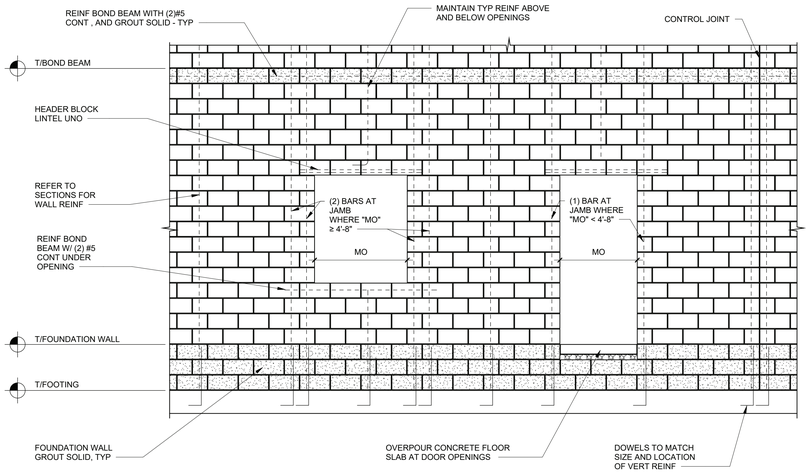

1 TYPICAL CONCRETE MASONRY WALL REINFORCING SCHEMATIC

S401 SCALE: 3/8" = 1'-0"

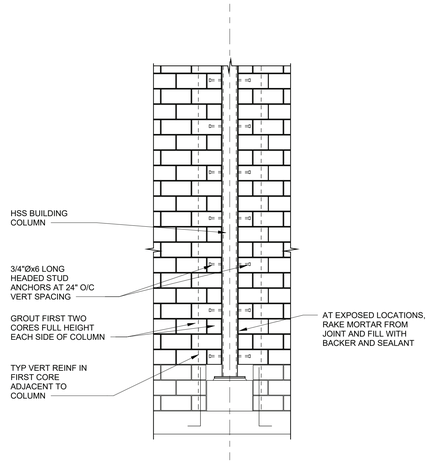

2 TYPICAL CONCRETE MASONRY WALL AT HSS COLUMN

S401 SCALE: 3/8" = 1'-0"

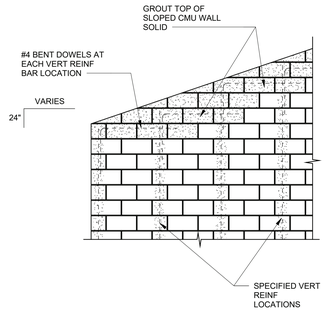

3 TYPICAL CONCRETE MASONRY WALL SLOPED BOND BEAM REINF ELEVATION

S401 SCALE: 3/8" = 1'-0"

LINTEL SCHEDULE

UNIT SIZE / SPAN	6" CMU	8" CMU	12" CMU
UP TO 4'-0"	WT5x8.5 #3 (2)#4	(2) L4x3 1/2" x5/16 #3 #4 (2) 4" NOMINAL PRECAST LINTELS	(3) L4x3 1/2" x5/16 #3 #4 (3) 4" NOMINAL PRECAST LINTELS
UP TO 8'-0"	WT7x13 #3 (2)#5	(2) L6x3 1/2" x5/16 #3 #5 (2) 4" NOMINAL PRECAST LINTELS	(3) L6x3 1/2" x5/16 #3 #5 (3) 4" NOMINAL PRECAST LINTELS
UP TO 10'-0"	NOT APPLICABLE	HSS8x8x5/16 WITH 3/4"Øx4" STUD ANCHORS AT 16" O/C	3/16 2 -16 2" EA SIDE AT EA END; HSS8x8x5/16 + 11x5/16 PLATE WITH 3/4"Øx4" STUD ANCHORS AT 16" O/C ON TOP OF HSS
UP TO 14'-0"	NOT APPLICABLE	HSS8x8x1/2 WITH 3/4"Øx4" STUD ANCHORS AT 16" O/C	3/16 2 -16 2" EA SIDE AT EA END; HSS8x8x1/2 + 11x5/16 PLATE WITH 3/4"Øx4" STUD ANCHORS AT 16" O/C ON TOP OF HSS

PROJECT CONDITIONS
1. LINTELS ARE REQUIRED FOR ALL MASONRY WALL OPENINGS (DOORS, WINDOWS, M/E/P, ETC)
2. LINTELS ARE NOT SHOWN ON PLANS. CONTRACTOR IS REQUIRED TO LAY OUT AND COORDINATE ALL LINTELS
3. CONTRACTOR IS REQUIRED TO SUBMIT A LINTEL SHOP DRAWING INDICATING ALL LINTEL LOCATION AND SIZES
4. CONTRACTOR HAS THE OPTION TO PROVIDE ALTERNATE LINTEL CONFIGURATIONS TO ACCOMMODATE INSTALLATION OR EXISTING CONDITIONS. PROVIDE DETAILS ON SHOP DRAWING SUBMITTAL FOR REVIEW

FABRICATIONS AND INSTALLATION
1. "SPAN" = CLEAR MASONRY OPENING DIMENSION. PROVIDE 8" BEARING LENGTH AT EACH END
2. HOT-DIP GALVANIZED ALL STEEL LINTELS IN EXTERIOR WALL CONSTRUCTION
3. UNLESS NOTED OTHERWISE, ALL UNEQUAL LEG ANGLES SHALL BE INSTALLED IN THE 'LLV' ORIENTATION
4. PRECAST LINTEL SHALL HAVE MATERIAL PROPERTIES F'_c = 4,000 PSI AND F_y = 60,000 PSI

BEARING CONDITIONS
1. FOR SPANS UP TO 8'-0", GROUT MASONRY SOLID 3 COURSES BELOW, AND 16" WIDE, UNDER LINTEL BEARING
2. FOR SPANS OVER 8'-0", GROUT MASONRY SOLID FULL HEIGHT BELOW, AND 16" WIDE, UNDER LINTEL BEARING
3. PROVIDE 8" BEARING LENGTH FOR ALL LINTELS
4. WHERE LINTELS BEAR LESS THAN 16" FROM STEEL COLUMNS, USE STEEL LINTELS ONLY. EXTEND STEEL LINTEL AND CONNECT TO COLUMN

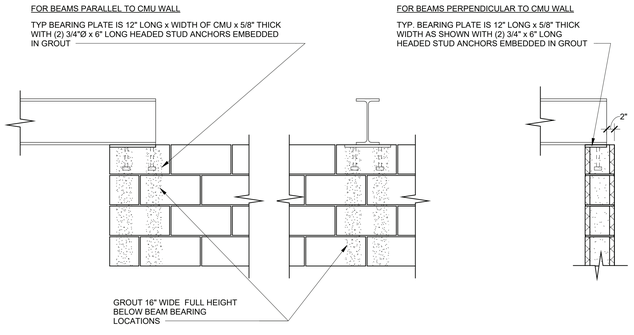

4 TYP. BEAM BEARING ON MASONRY WALLS

S401 SCALE: 3/4" = 1'-0"

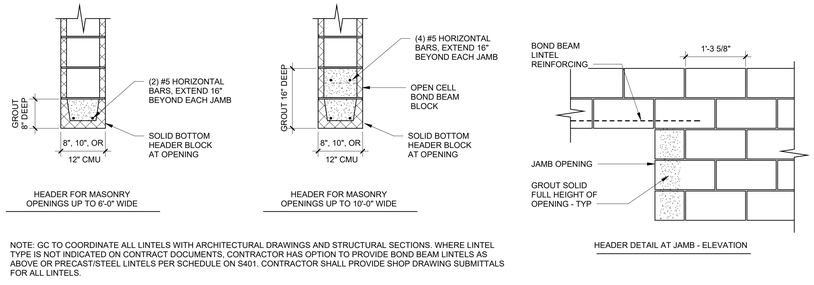

NOTE: GC TO COORDINATE ALL LINTELS WITH ARCHITECTURAL DRAWINGS AND STRUCTURAL SECTIONS. WHERE LINTEL TYPE IS NOT INDICATED ON CONTRACT DOCUMENTS, CONTRACTOR HAS OPTION TO PROVIDE BOND BEAM LINTELS AS ABOVE OR PRECAST/STEEL LINTELS PER SCHEDULE ON S401. CONTRACTOR SHALL PROVIDE SHOP DRAWING SUBMITTALS FOR ALL LINTELS.

5 TYPICAL BAND BEAM LINTEL IN NON-LOAD BEARING CMU PARTITIONS

S401 SCALE: 3/4" = 1'-0"

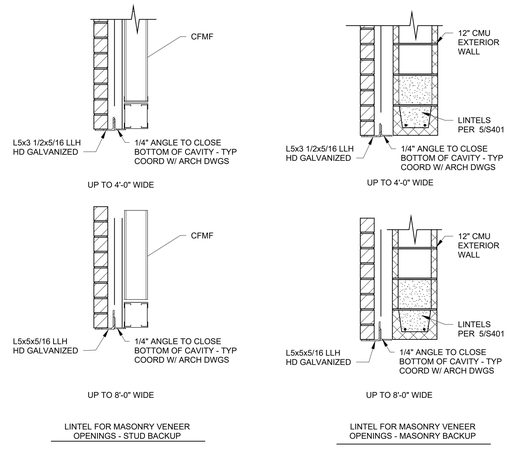

6 TYPICAL EXTERIOR WALL OPENING LINTEL DETAILS

S401 SCALE: 3/4" = 1'-0"

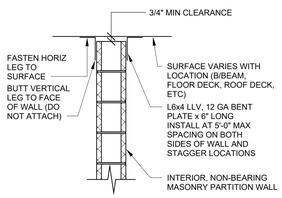

BRACE TOP OF ALL INTERIOR NON-BEARING MASONRY PARTITION WALLS IN ACCORDANCE WITH THIS DETAIL

7 TYPICAL CONCRETE MASONRY WALL BRACING DETAIL

S401 SCALE: 3/4" = 1'-0"

THE TYPICAL MASONRY CONSTRUCTION AND LINTEL DETAILS SHOWN ON THIS DRAWING SHALL BE APPLIED THROUGHOUT THE PROJECT AT ALL LOCATIONS AS REQUIRED. SECTION INDICATORS FOR TYPICAL DETAILS ARE NOT SHOWN ON PLANS

SCHRADERGROUP
555 E North Lane, Suite 5100, Building D
Conshohocken, PA 19428
p: 215 482 7440
f: 215 482 7441
www.sgarc.com

Consultants:

Civil:
T&M Associates
1700 Market Street, Suite 3110
Philadelphia, PA 19103
(215) 282-7850

MEP:
Synder Hoffman Associates
1005 West Lehigh Street
Bethlehem, PA 18018
(610) 694-8020

Structural Engineer
SCHRADERGROUP
153 East King Street, Suite 211-212
Lancaster, PA 17602
(717) 299-8965

Professional Seal:

Owner:
WEST CHESTER AREA SCHOOL DISTRICT
782 Springdale Drive, Exton, PA 19341

Additions and Renovations to:
HILLSDALE ELEMENTARY SCHOOL
725 West Market Street
West Chester, PA 19382

ISSUED FOR:

NO.	DESCRIPTION	DATE
	BUILDING PERMIT / BIDDING	10/07/2024
	GC REBID	12/03/2024

DATE: 12/03/2024

SGA PROJECT NUMBER: 23-029

Key Plan:

Drawing Title:
MASONRY DETAILS

Drawing Number:
S401

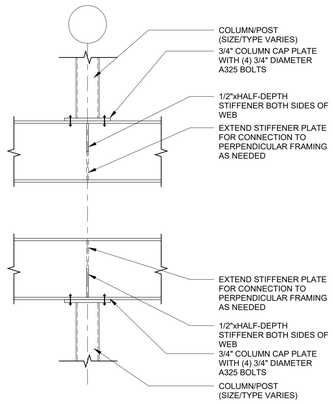

1 TYPICAL CONTINUOUS BEAM OVER/UNDER COLUMN

S501 SCALE: 3/4" = 1'-0"

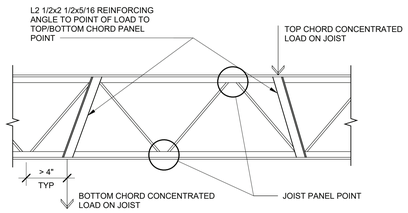

2 TYPICAL JOIST REINFORCEMENT FOR OFF-PANEL-POINT CONCENTRATED LOADS

S501 SCALE: 3/4" = 1'-0"

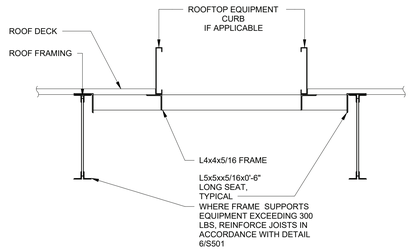

NOTE:

REFER TO ARCHITECTURAL, MECHANICAL, AND ELECTRICAL DRAWINGS FOR EXACT NUMBER, SIZE AND LOCATION. PROVIDE FRAMES FOR ALL OPENINGS GREATER THAN 10" DIAMETER

3 TYPICAL ROOF OPENING

S501 SCALE: 3/4" = 1'-0"

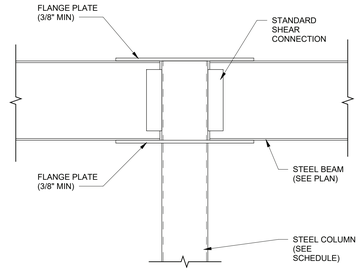

NOTE:
FLANGE PLATES MAY BE BOLTED OR WELDED TO FLANGES. FLANGE PLATES MAY BE RECTANGULAR PLATE OR CUT-OUT PLATES AS REQUIRED BY GEOMETRY AND LOAD. PLATE CONFIGURATION AND SIZE BY FABRICATOR.

4 TYPICAL WIDE FLANGE TO HSS MOMENT CONNECTION

S501 SCALE: 3/4" = 1'-0"

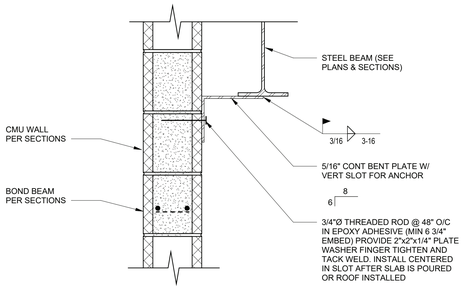

5 TYPICAL BENT PLATE DETAIL

S501 SCALE: 1 1/2" = 1'-0"

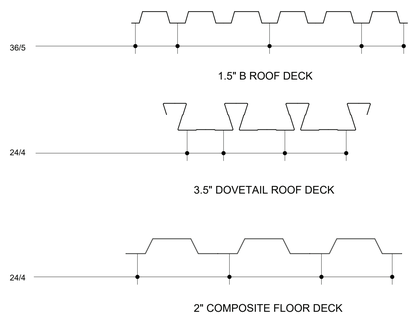

NOTES:
1. PATTERNS BASED ON CAPACITY OF 3/4" PUDDLE WELDS W/ #10 SIDELAP FASTENERS. IF CONTRACTOR PROPOSES ALTERNATE ATTACHMENT METHOD OR SPACING, DATA MUST BE PROVIDED INDICATING ALTERNATE HAS EQUIVALENT OR GREATER CAPACITY
2. SIDELAP ATTACHMENTS SPACED AT LESSER OR 1/2 SPAN OR 18"

6 TYPICAL STEEL DECK ATTACHMENT

S501 SCALE: 1 1/2" = 1'-0"

THE TYPICAL FRAMING AND CONNECTION DETAILS SHOWN ON THIS DRAWING SHALL BE APPLIED THROUGHOUT THE PROJECT AT ALL LOCATIONS AS REQUIRED. SECTION INDICATORS FOR TYPICAL DETAILS ARE NOT SHOWN ON PLANS

SCHRADERGROUP
555 E North Lane, Suite 5100, Building D
Conshohocken, PA 19428
p: 215 482 7440
f: 215 482 7441
www.sgarc.com

Consultants:

Civil:
T&M Associates
1700 Market Street, Suite 3110
Philadelphia, PA 19103
(215) 282-7850

MEP:
Synder Hoffman Associates
1005 West Lehigh Street
Bethlehem, PA 18018
(610) 694-8020

Structural Engineer
SCHRADERGROUP
153 East King Street, Suite 211-212
Lancaster, PA 17602
(717) 299-8965

Professional Seal:

Owner:
WEST CHESTER AREA SCHOOL DISTRICT
782 Springdale Drive, Exton, PA 19341

Additions and Renovations to:
HILLSDALE ELEMENTARY SCHOOL
725 West Market Street
West Chester, PA 19382

ISSUED FOR:

NO.	DESCRIPTION	DATE
	BUILDING PERMIT / BIDDING	10/07/2024
	GC REBID	12/03/2024

DATE: 12/03/2024

SGA PROJECT NUMBER: 23-029

Key Plan:

Drawing Title:
TYPICAL STEEL DETAILS

Drawing Number:
S501

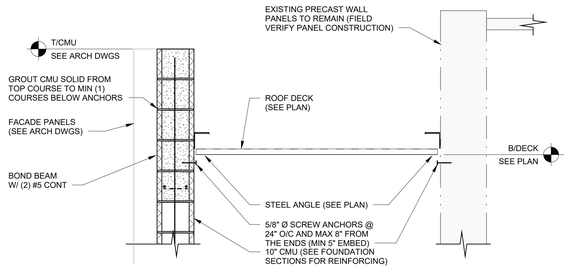

1 SECTION
S502 SCALE: 3/4" = 1'-0"

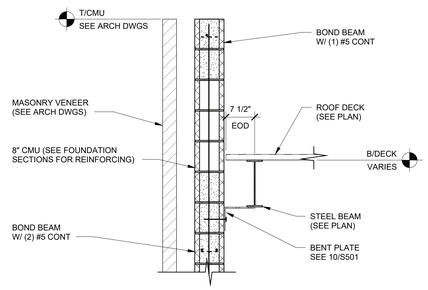

2 SECTION
S502 SCALE: 3/4" = 1'-0"

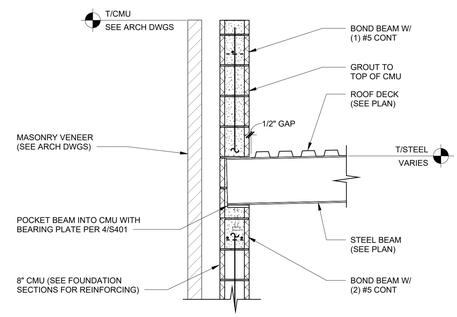

3 SECTION
S502 SCALE: 3/4" = 1'-0"

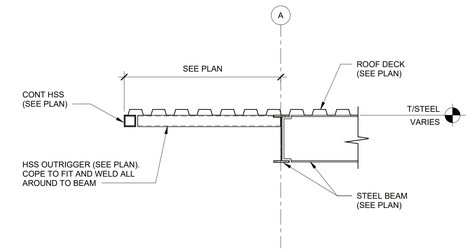

4 SECTION
S502 SCALE: 3/4" = 1'-0"

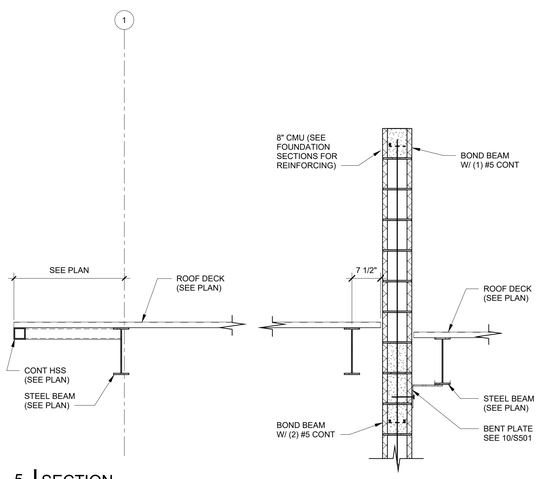

5 SECTION
S502 SCALE: 3/4" = 1'-0"

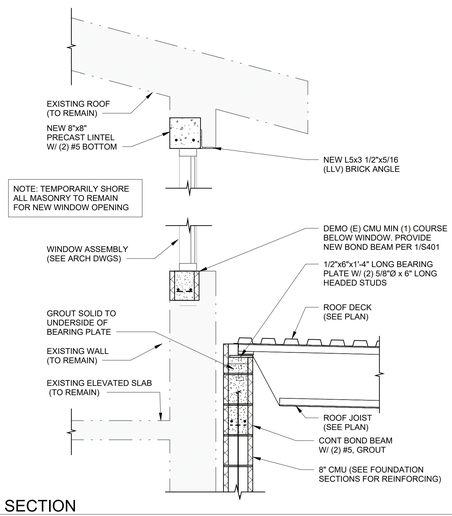

6 SECTION
S502 SCALE: 3/4" = 1'-0"

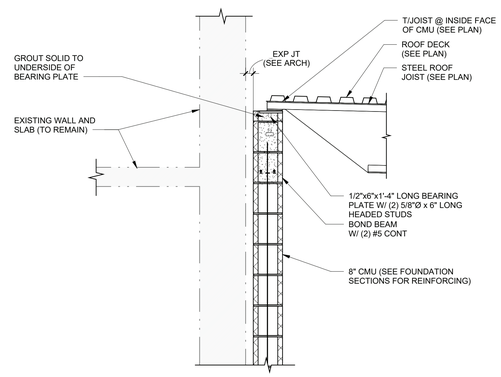

7 SECTION
S502 SCALE: 3/4" = 1'-0"

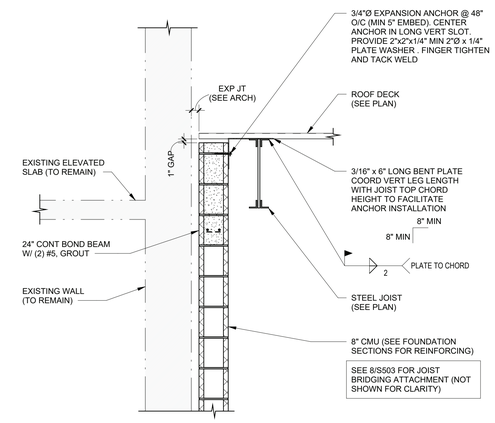

8 SECTION
S502 SCALE: 3/4" = 1'-0"

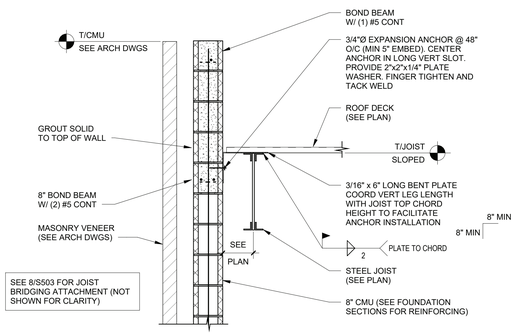

NOTE: AT WIDE FLANGE BEAMS INSTALL CONT BENT PLATE ON BOTTOM OF BEAM

9 SECTION
S502 SCALE: 3/4" = 1'-0"

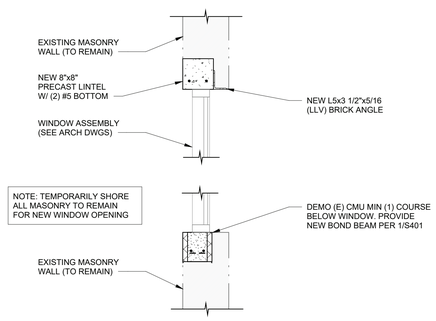

10 SECTION
S502 SCALE: 3/4" = 1'-0"

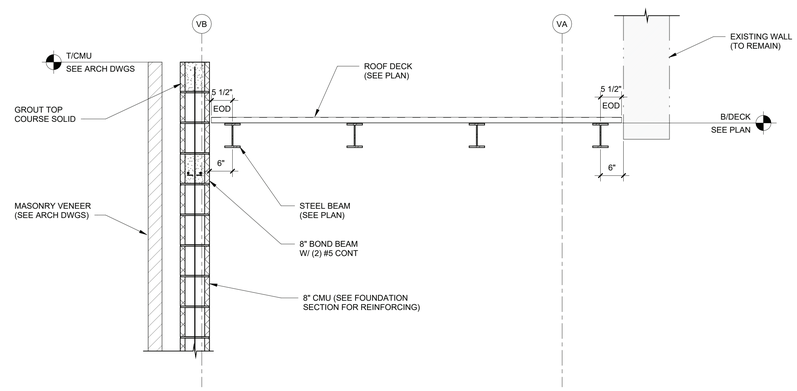

11 SECTION
S502 SCALE: 3/4" = 1'-0"

SCHRADERGROUP
555 E North Lane, Suite 5100, Building D
Conshohocken, PA 19428
p: 215 482 7440
f: 215 482 7441
www.sgarc.com

Consultants:

Civil:
T&M Associates
1700 Market Street, Suite 3110
Philadelphia, PA 19103
(215) 282-7850

MEP:
Synder Hoffman Associates
1005 West Lehigh Street
Bethlehem, PA 18018
(610) 694-8020

Structural Engineer
SCHRADERGROUP
153 East King Street, Suite 211-212
Lancaster, PA 17602
(717) 299-8965

Professional Seal:

Owner:
WEST CHESTER AREA SCHOOL DISTRICT
782 Springdale Drive, Exton, PA 19341

Additions and Renovations to:
HILLSDALE ELEMENTARY SCHOOL
725 West Market Street
West Chester, PA 19382

ISSUED FOR:

NO.	DESCRIPTION	DATE
	BUILDING PERMIT / BIDDING	10/07/2024
	GC REBID	12/03/2024

DATE: 12/03/2024

SGA PROJECT NUMBER: 23-029

Key Plan:

Drawing Title:
FRAMING DETAILS

Drawing Number:
S502

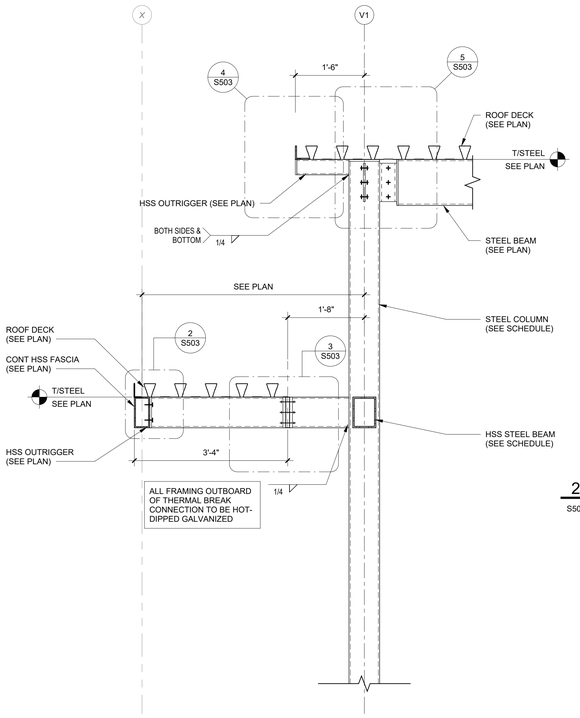

1 SECTION
S503 SCALE: 3/4" = 1'-0"

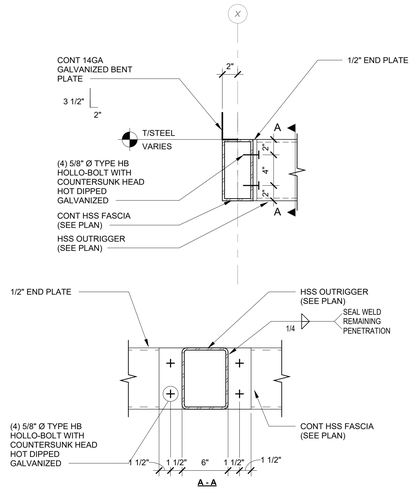

2 SECTION
S503 SCALE: 1 1/2" = 1'-0"

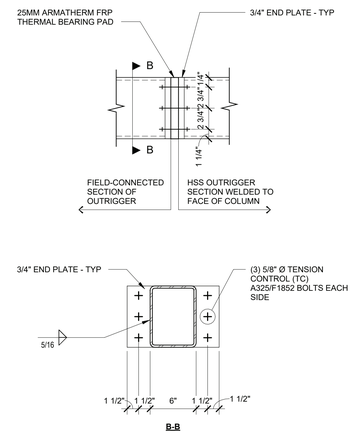

3 SECTION
S503 SCALE: 1 1/2" = 1'-0"

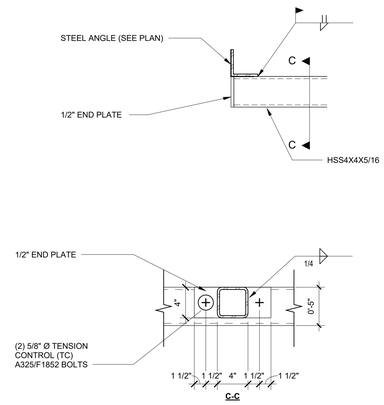

4 SECTION
S503 SCALE: 1 1/2" = 1'-0"

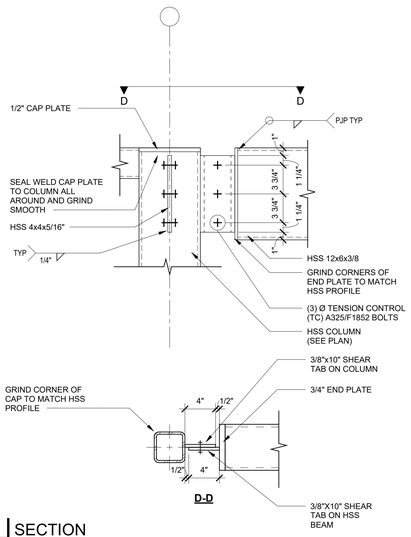

5 SECTION
S503 SCALE: 1 1/2" = 1'-0"

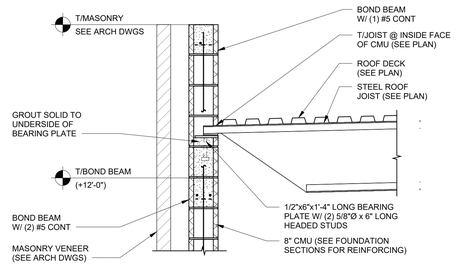

6 SECTION
S503 SCALE: 3/4" = 1'-0"

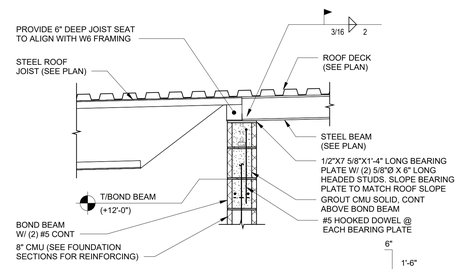

7 SECTION
S503 SCALE: 3/4" = 1'-0"

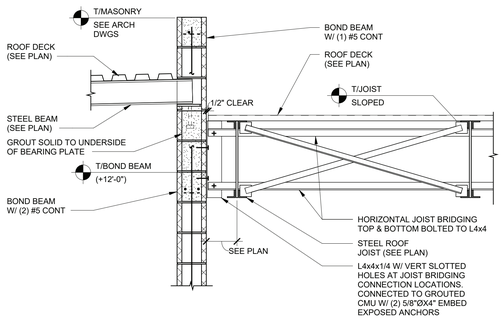

8 SECTION
S503 SCALE: 3/4" = 1'-0"

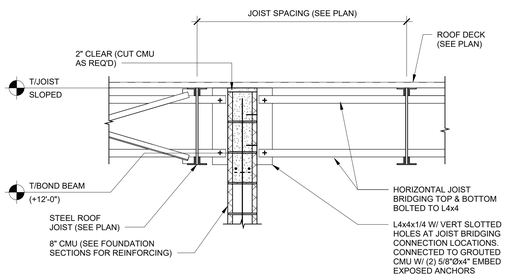

9 SECTION
S503 SCALE: 3/4" = 1'-0"

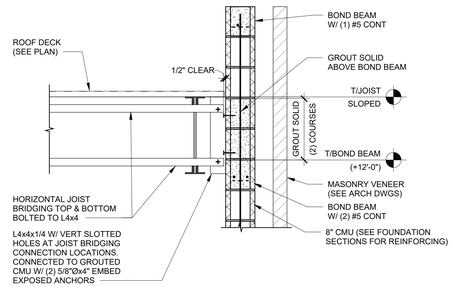

10 SECTION
S503 SCALE: 3/4" = 1'-0"

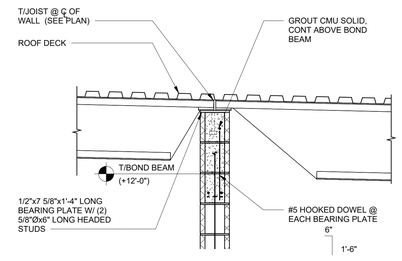

11 SECTION
S503 SCALE: 3/4" = 1'-0"

SCHRADERGROUP
555 E North Lane, Suite 5100, Building D
Conshohocken, PA 19428
p: 215 482 7440
f: 215 482 7441
www.sgarc.com

Consultants:

Civil:
T&M Associates
1700 Market Street, Suite 3110
Philadelphia, PA 19103
(215) 282-7850

MEP:
Synder Hoffman Associates
1005 West Lehigh Street
Bethlehem, PA 18018
(610) 694-8020

Structural Engineer
SCHRADERGROUP
153 East King Street, Suite 211-212
Lancaster, PA 17602
(717) 299-8965

Professional Seal:

Owner:
WEST CHESTER AREA
SCHOOL DISTRICT
782 Springdale Drive, Exton,
PA 19341

Additions and Renovations to:
HILLSDALE ELEMENTARY
SCHOOL
725 West Market Street
West Chester, PA 19382

ISSUED FOR:

NO.	DESCRIPTION	DATE
	BUILDING PERMIT / BIDDING	10/07/2024
	GC REBID	12/03/2024

DATE: 12/03/2024

SGA PROJECT NUMBER: 23-029

Key Plan:

Drawing Title:
FRAMING DETAILS

Drawing Number:
S503

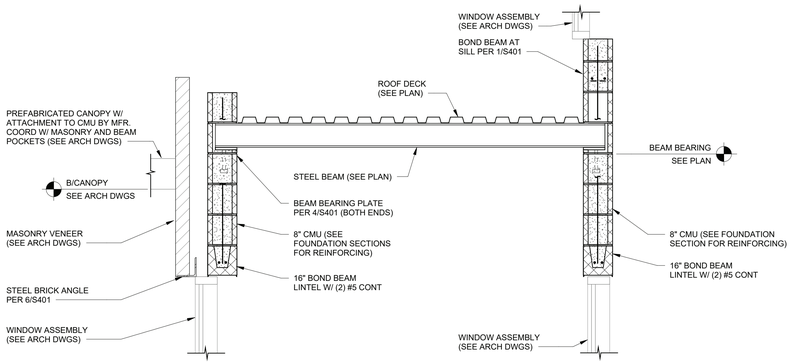

1 SECTION
S504 SCALE: 3/4" = 1'-0"

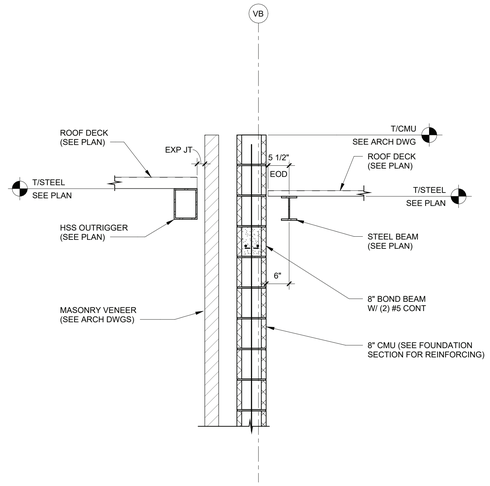

2 SECTION
S504 SCALE: 3/4" = 1'-0"

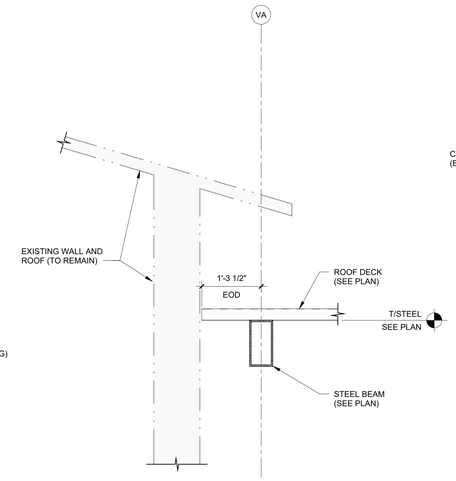

3 SECTION
S504 SCALE: 3/4" = 1'-0"

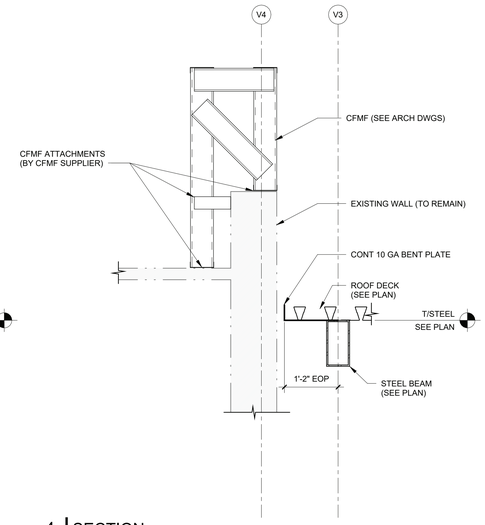

4 SECTION
S504 SCALE: 3/4" = 1'-0"

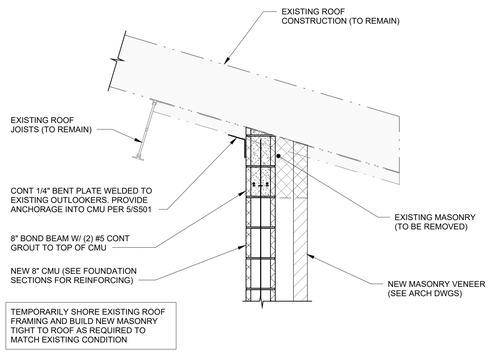

5 SECTION
S504 SCALE: 3/4" = 1'-0"

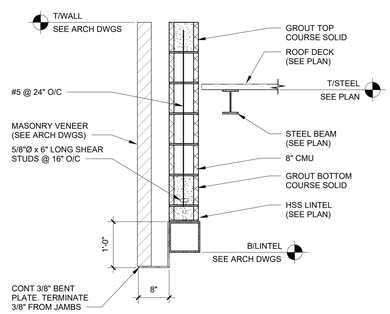

6 SECTION
S504 SCALE: 3/4" = 1'-0"

SCHRADERGROUP
555 E North Lane, Suite 5100, Building D
Conshohocken, PA 19428
p: 215 482 7440
f: 215 482 7441
www.sgarc.com

Consultants:

Civil:
T&M Associates
1700 Market Street, Suite 3110
Philadelphia, PA 19103
(215) 282-7850

MEP:
Synder Hoffman Associates
1005 West Lehigh Street
Bethlehem, PA 18018
(610) 694-8020

Structural Engineer
SCHRADERGROUP
153 East King Street, Suite 211-212
Lancaster, PA 17602
(717) 299-8965

Professional Seal:

Owner:
WEST CHESTER AREA
SCHOOL DISTRICT
782 Springdale Drive, Exton,
PA 19341

Additions and Renovations to:
HILLSDALE ELEMENTARY
SCHOOL
725 West Market Street
West Chester, PA 19382

ISSUED FOR:

NO.	DESCRIPTION	DATE
	BUILDING PERMIT / BIDDING	10/07/2024
	GC REBID	12/03/2024

DATE: 12/03/2024

SGA PROJECT NUMBER: 23-029

Key Plan:

Drawing Title:
FRAMING DETAILS

Drawing Number:
S504